CITY OF RANCHO MIRAGE

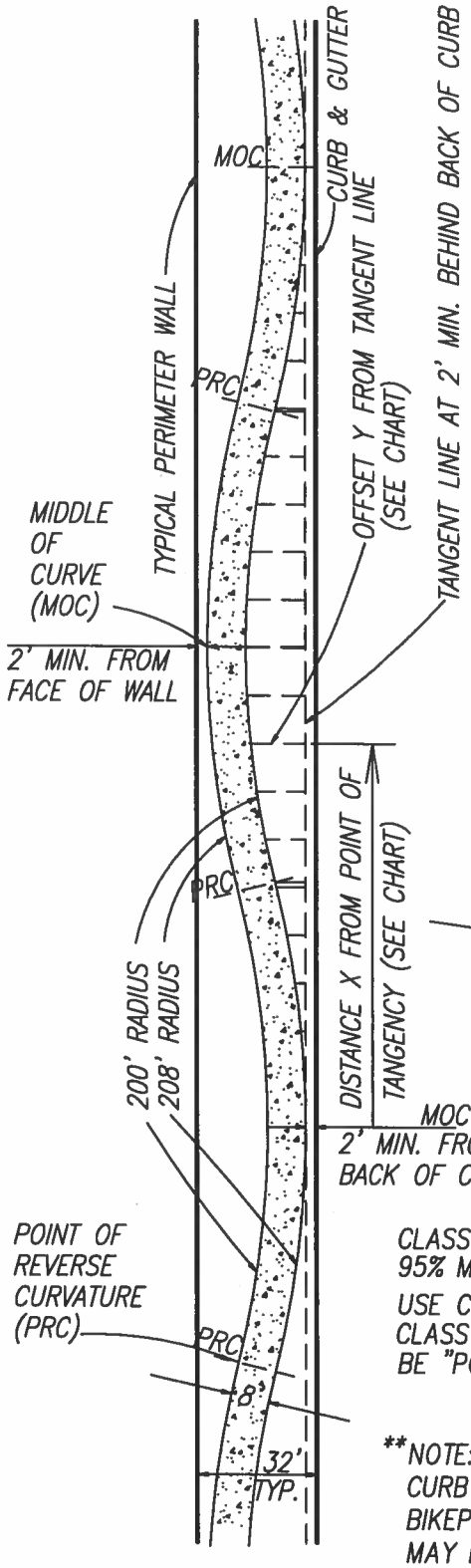

DESIGN CRITERIA:

* • R=200' MIN., 500' MAX.
(SEE CHARTS ON SHEET 2 OF 2 FOR R=200' DATA)

- PROVIDE A MINIMUM OF 2' CLEARANCE FROM OBSTRUCTIONS
- 10' MIN. TO BRANCHING TREES FROM CURB
- 5' MIN. TO BRANCHING TREES FROM BIKEPATH
- 3' MIN. TO PALM TREES FROM CURB OR BIKEPATH (SEE "LANDSCAPE SPECIFICATION AND DETAIL MANUAL")
- IN SECTION 30, BIKEPATH WIDTH IS 6' AND CONCRETE IS COLORED "YOSEMITE BROWN"
- BIKEPATH LAYOUT ON PLANS IS CONCEPTUAL ONLY, AND FINAL APPROVAL OF THE BIKEPATH LAYOUT SHALL BE MADE BY THE INSPECTOR PRIOR TO CONSTRUCTION.

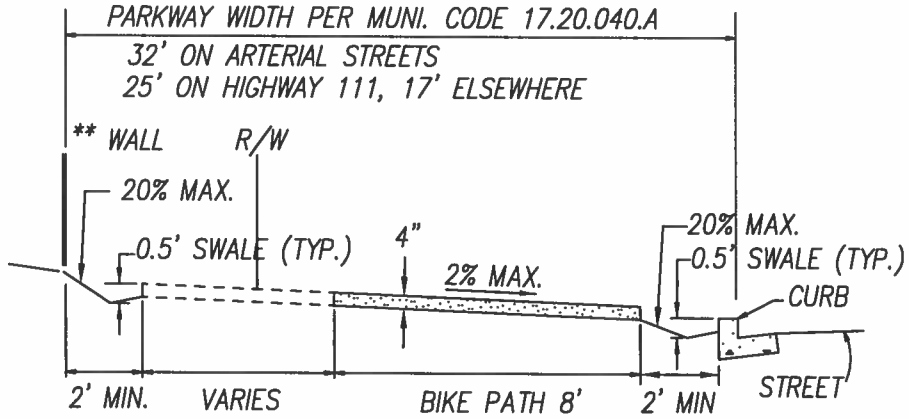

TYPICAL CROSS SECTION

CLASS 560-C-3250 P.C.C. (NO FLY ASH) ON COMPACTED SUBGRADE 95% MIN. RELATIVE COMPACTION (SEE STD 206 FOR JOINT DETAILS)

USE CONCRETE CURING COMPOUND, ASTM C309/AASHTO M148, TYPE 2, CLASS A OR B, WITH WHITE PIGMENT. AFTER CURING, COMPOUND SHALL BE "POWER WASHED" OFF CURB TOP AND FACE BEFORE ANY CURB PAINTING

**NOTE: TYPICAL ARTERIAL PARKWAYS ARE 32 FEET FROM CURB TO WALLS WITH BIKEPATH MEANDERING BETWEEN. BIKEPATH EASEMENTS OR ADDITIONAL RIGHT-OF-WAY MAY BE REQUIRED ON A CASE BY CASE BASIS.

CITY OF RANCHO MIRAGE		STANDARD DETAIL 500
REVISIONS	MEANDERING BIKE PATH	
12/04/2002		
10/29/2003		
7/5/2012	8/25/16	
8/16/2016	APPROVED BY: CITY ENGINEER DATE	SHEET 1 OF 2

CITY OF RANCHO MIRAGE

8' BIKEPATH WITH 19.50' OFFSET, TYPICAL FOR 32' PARKWAY

RADIUS	PT.	DIST. X	OFFSET Y
208'	MOC	0.00'	0.00'
208'		10.00'	0.24'
208'		20.00'	0.96'
208'		30.00'	2.17'
208'		40.00'	3.88'
208'		50.00'	6.10'
208'		60.00'	8.84'
208'/200'	PRC	63.54'	9.94'
200'		70.00'	11.90'
200'		80.00'	14.46'
200'		90.00'	16.48'
200'		100.00'	17.98'
200'		110.00'	18.96'
200'		120.00'	19.45'
200'	MOC	124.63'	19.50'
200'		130.00'	19.43'
200'		140.00'	18.91'
200'		150.00'	17.88'
200'		160.00'	16.35'
200'		170.00'	14.29'
200'		180.00'	11.68'
200'/208'	PRC	185.72'	9.94'
208'		190.00'	8.62'
208'		200.00'	5.92'
208'		210.00'	3.74'
208'		220.00'	2.07'
208'		230.00'	0.89'
208'		240.00'	0.21'
208'	MOC	249.25'	0.00'

MAXIMUM OFFSET 19.50'
PEAK TO PEAK 249.25'

8' BIKEPATH WITH 12.50' OFFSET, TYPICAL FOR 25' PARKWAY

RADIUS	PT.	DIST. X	OFFSET Y
208'	MOC	0.00'	0.00'
208'		10.00'	0.24'
208'		20.00'	0.96'
208'		30.00'	2.17'
208'		40.00'	3.88'
208'		50.00'	6.10'
208'/200'	PRC	51.09'	6.37'
200'		60.00'	8.41'
200'		70.00'	10.20'
200'		80.00'	11.48'
200'		90.00'	12.24'
200'		100.00'	12.50'
200'	MOC	100.22'	12.50'
200'		110.00'	12.26'
200'		120.00'	11.52'
200'		130.00'	10.27'
200'		140.00'	8.50'
200'/208'	PRC	149.35'	6.37'
208'		150.00'	6.21'
208'		160.00'	3.97'
208'		170.00'	2.24'
208'		180.00'	1.01'
208'		190.00'	0.26'
208'		200.00'	0.00'
208'	MOC	200.44'	0.00'

MAXIMUM OFFSET 12.50'
PEAK TO PEAK 200.44'

8' BIKEPATH WITH 4.50' OFFSET, TYPICAL FOR 17' PARKWAY

RADIUS	PT.	DIST. X	OFFSET Y
208'	MOC	0.00'	0.00'
208'		10.00'	0.24'
208'		20.00'	0.96'
208'		30.00'	2.17'
208'/200'	PRC	30.81'	2.29'
200'		40.00'	3.45'
200'		50.00'	4.23'
200'		60.00'	4.50'
200'	MOC	60.43'	4.50'
200'		70.00'	4.27'
200'		80.00'	3.54'
200'		90.00'	2.30'
200'/208'	PRC	90.05'	2.29'
208'		100.00'	1.05'
208'		110.00'	0.28'
208'		120.00'	0.00'
208'	MOC	120.86'	0.00'

MAXIMUM OFFSET 4.50'
PEAK TO PEAK 120.86'

CHART OF DISTANCES AND OFFSETS FOR R=200' FOR TYPICAL MEANDERING BIKEPATHS

NOTE: ADD 2' MINIMUM FROM BACK OF CURB TO OFFSETS FOR DISTANCE FROM CURB. IF THE DESIGN DOES NOT CONFORM TO ONE OF THE TYPICAL MEANDERING CHARTS ABOVE, A SIMILAR OFFSET CHART FOR THE DESIGN MAY BE REQUIRED TO BE PLACED ON THE STREET PLANS OR WHEREVER THE DESIGN FOR THE BIKEPATH IS OTHERWISE SHOWN.

CITY OF RANCHO MIRAGE		STANDARD DETAIL 500
REVISIONS	* BIKE PATH OFFSETS	
12/04/2002		
10/29/2003		
* 7/5/2012	7/12/12	
	APPROVED BY: CITY ENGINEER DATE	SHEET 2 OF 2

CITY OF RANCHO MIRAGE

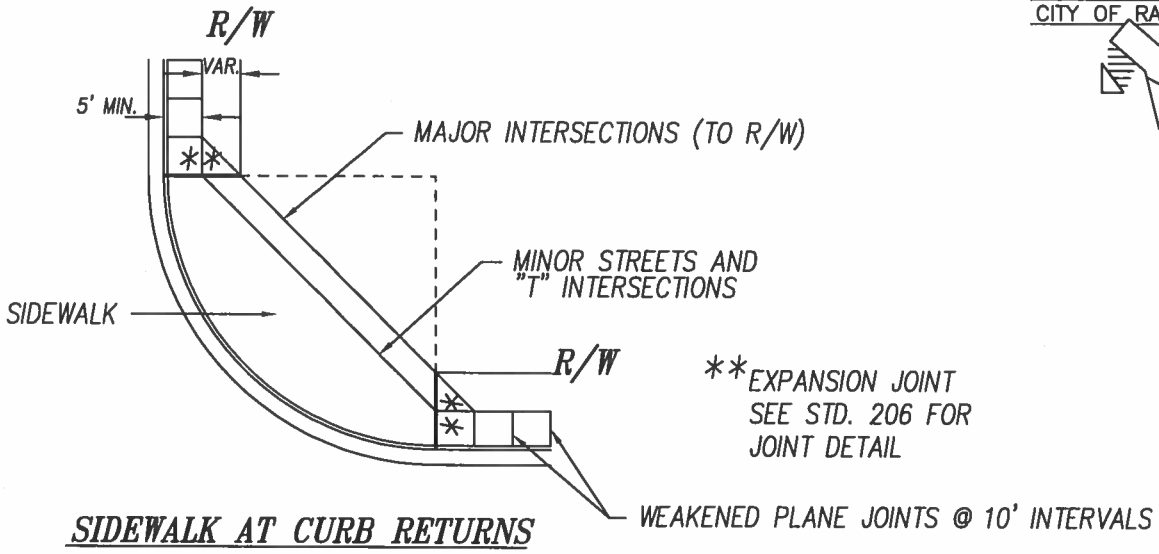

SIDEWALK AT CURB RETURNS

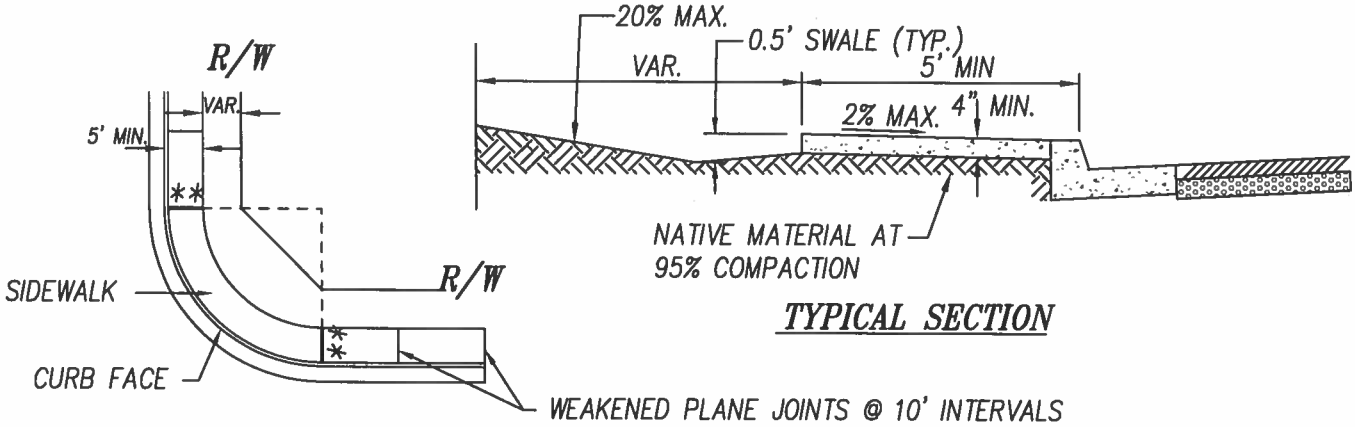

SIDEWALK ON INSIDE OF KNUCKLE

TYPICAL SECTION

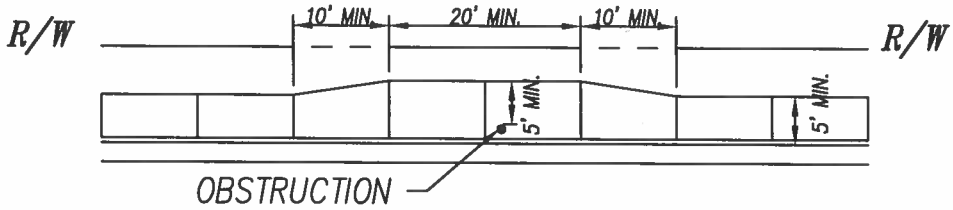

SIDEWALK TRANSITION

CLASS 560-C-3250 P.C.C. (NO FLY ASH) ON COMPACTED SUBGRADE
95% MIN. RELATIVE COMPACTION (SEE STD 206 FOR JOINT DETAILS)

USE CONCRETE CURING COMPOUND, ASTM C309/AASHTO M148, TYPE 2, CLASS A OR B, WITH WHITE PIGMENT. AFTER CURING, COMPOUND SHALL BE "POWER WASHED" OFF CURB TOP AND FACE BEFORE ANY CURB PAINTING

CITY OF RANCHO MIRAGE		STANDARD DETAIL 501
REVISIONS	RESIDENTIAL SIDEWALK SIDEWALK TRANSITION	
7/5/2012		
8/16/2016		
	8/25/16 APPROVED BY: CITY ENGINEER DATE	

CITY OF RANCHO MIRAGE

SEE STDS 500, 501 FOR SIDEWALK DETAILS

* P.C.C. TO BE CLASS 560-C-3250 (NO FLY ASH) ON MIN. 95% COMPACTED SUBGRADE

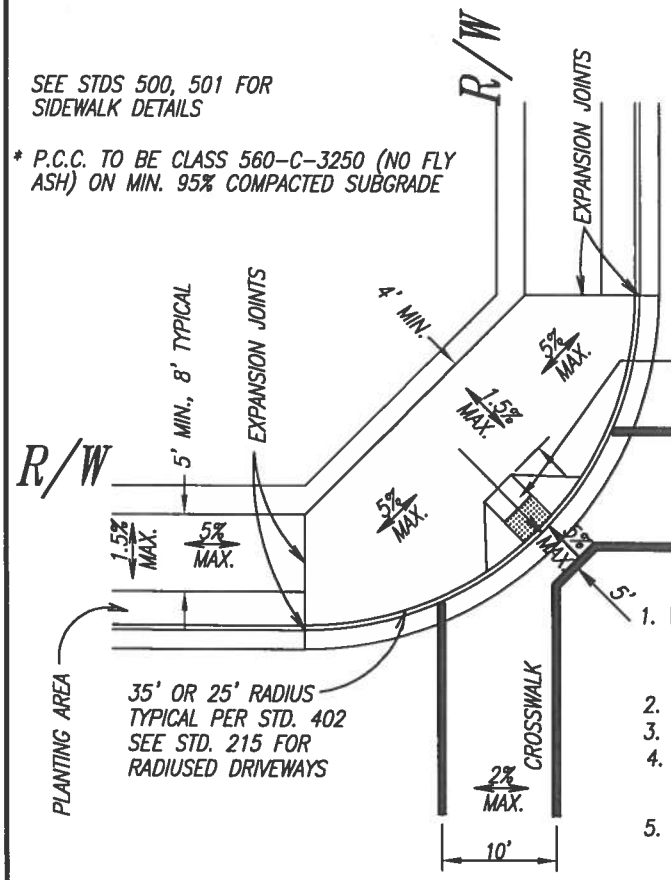

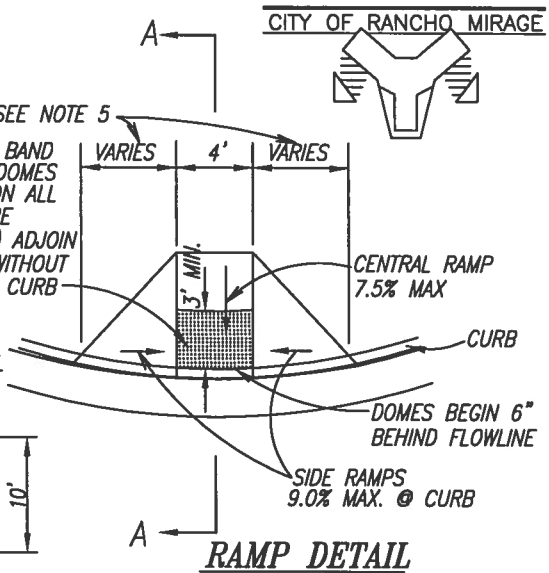

RAMP DETAIL

NTS

NOTES

1. WHEN RAMP IS LOCATED IN CENTER OF CURB RETURN, CROSSWALK CONFIGURATION MUST BE SIMILAR TO PLAN VIEW TO ACCOMMODATE WHEELCHAIRS. IF THERE IS ONLY ONE CROSSWALK, AIM CENTRAL RAMP AT CENTER OF CROSSWALK.
2. THE BOTTOM OF THE RAMP SHALL BE FLUSH WITH ADJOINING PAVEMENT.
3. SIDEWALK AND RAMP THICKNESS, "T", SHALL BE A MIN. 4".
4. IF THERE IS NOT ENOUGH ROOM TO GET THE 4' OF 1.5% AREA BEHIND THE RAMP, THEN IT CAN BE OMITTED BY SETTING THE SIDES OF THE RAMP AT A SLOPE LESS THAN 7.5%.
5. NOTE THAT RAMP DIMENSIONS SHOULD BE DETERMINED BY SLOPE CRITERIA ONLY. THE SIDE RAMP LENGTHS WILL NOT TYPICALLY BE EQUAL TO EACH OTHER UNLESS THE CURB RETURN IS LEVEL.
6. ALL RAMPS NOW REQUIRE AT LEAST A 3' DEEP BAND OF "TRUNCATED DOME" WARNING SURFACE MARKERS NO MATTER WHAT THE SLOPE IS. A SIMILAR 3' DEEP BAND OF "TRUNCATED DOMES" IS ALSO REQUIRED WHEREVER WALKWAYS (NOT CONSIDERED "RAMPS" WHEN SLOPE < 5%) ADJOIN VEHICLE AREAS WITH LESS THAN A 4" CURB SEPARATING THEM. THESE ARE AVAILABLE ON INSERTABLE PANELS, INDIVIDUAL UNITS, OR AS A "STAMP" FOR THE CONCRETE. THEY NEED TO BE COLORED "TERRA-COTTA BROWN" OR EQUIV. WITHIN THE PUBLIC RIGHT-OF-WAY.
7. MAXIMUM SLOPES OF ADJOINING GUTTER, THE ROAD SURFACE IMMEDIATELY ADJACENT TO THE CURB RAMP AND CONTINUOUS PASSAGE TO THE CURB RAMP SHALL NOT EXCEED 5% WITHIN 4' OF THE BOTTOM OF THE CURB RAMP.

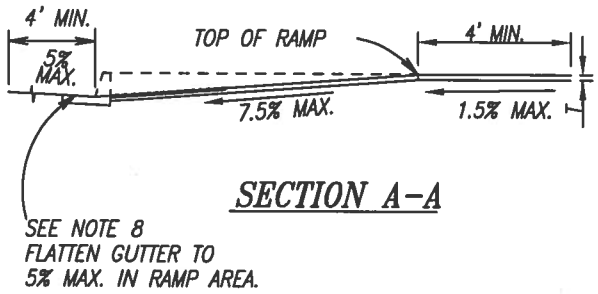

SECTION A-A

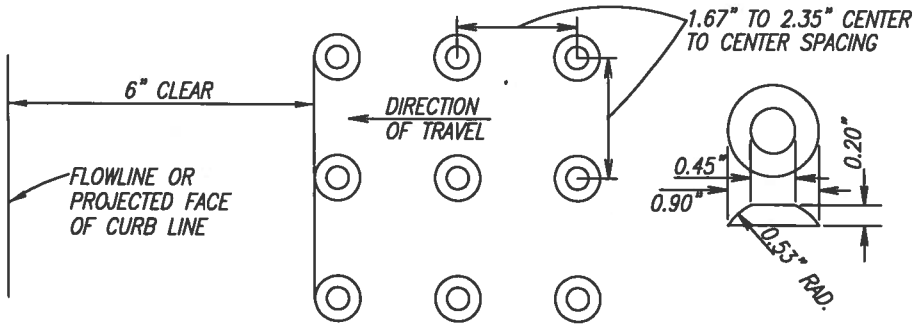

TRUNCATED DOME DETAILS

CITY OF RANCHO MIRAGE		STANDARD DETAIL 502
REVISIONS	ACCESS RAMP, TYPICAL INTERSECTION	
1/22/2009		
7/5/2012		
8/16/2016	8/25/16	
	APPROVED BY: CITY ENGINEER DATE	