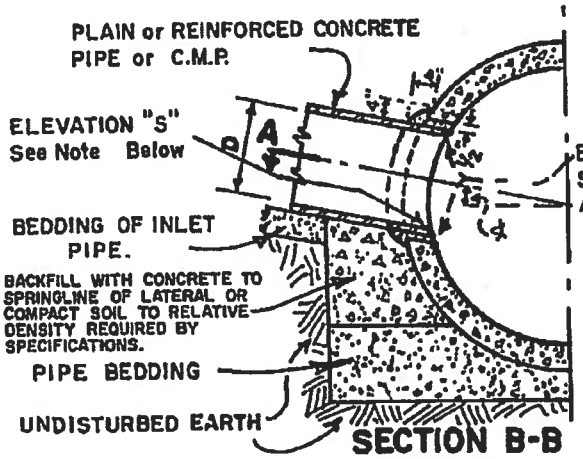

SECTION B-B

CASE-1

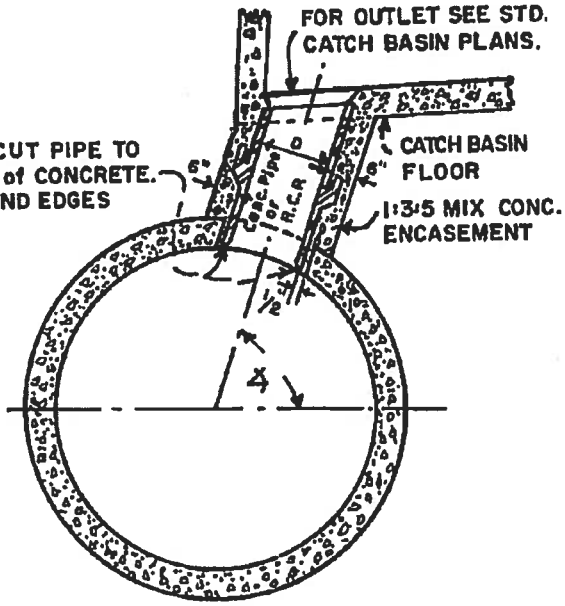

CASE-2

CATCH BASIN ABOVE STORM DRAIN

NOTE

ALL CONNECTOR PIPES (within the angles specified for Case 2) shall be encased when laid within the main line excavated trench, or when laid on fill which has not been densified.

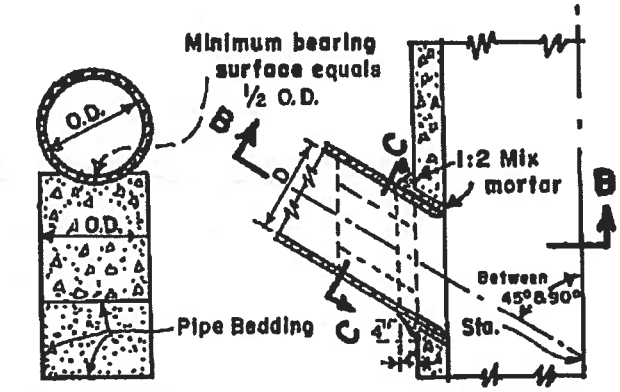

SECTION C-C

SECTION A-A

CASE-1-SIDE INLET

NOTES CASES 1 & 2

1. D shall be 24" or less, and in no case shall the outside diameter of the inlet pipe exceed one-half the inside diameter of the main line. If ∡ is 45° or less, use Case 1. If ∡ is greater than 45°, use Case 2.
2. ℄ of inlet shall be on radius of main storm drain except when elevation "S" is shown on project drawing PROFILE.
3. The minimum opening into the existing storm drain shall be the outside diameter of the connecting pipe plus 1 inch.
4. All corrugated metal pipe and fittings shall be galvanized.
5. Sta. at F.L. & center of pipe, shown on project dwg. PROFILE

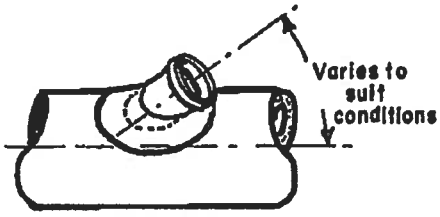

PLAN

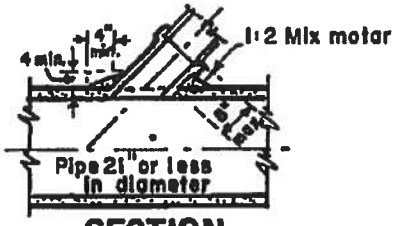

SECTION

CASE-3-SADDLE CONNECTION

NOTES CASE-3-SADDLE CONNECTION

1. Connections to pipes 21" or less in diameter without junction structures or precast Y branches shall be made with saddles.
2. Trim or cut saddle to fit snugly over the outside of the main pipe and so it's axis will be on the line and grade of the connecting pipe.
3. The opening into the pipe shall be cut and trimmed to fit the saddle so that no part will project within the bore of the saddle pipe.
4. The connecting pipe shall be supported as shown in Case 1 and 2.

REGISTERED PROFESSIONAL ENGINEER WARREN D. WILLIAMS No. 32338 Exp. 12-31-04 CIVIL STATE OF CALIFORNIA

RIVERSIDE COUNTY FLOOD CONTROL AND WATER CONSERVATION DISTRICT

APPROVED BY: CHIEF ENGINEER

DATE: April 5, 2004 R.C.E. NO. 32338

JUNCTION STRUCTURE NO. 4

STANDARD DRAWING NUMBER JS229

L.A.C.F.C.D. STD. NO. 2-D193

NOTES:

1. CONNECTION AND PIPE TO BE BACKFILLED PER ASTM D2321, LATEST EDITION.
2. IN LIEU OF AN INTERNAL CYLINDER, AN HDPE WATERTIGHT REPAIR COUPLER CAN BE USED.
3. INTERNAL CYLINDER ADAPTER IS NOT RECOMMENDED FOR DOWNSTREAM CONNECTIONS.

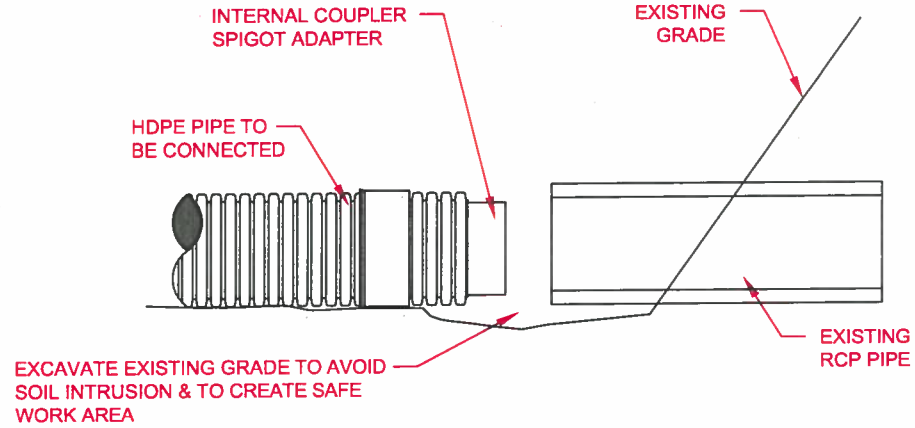

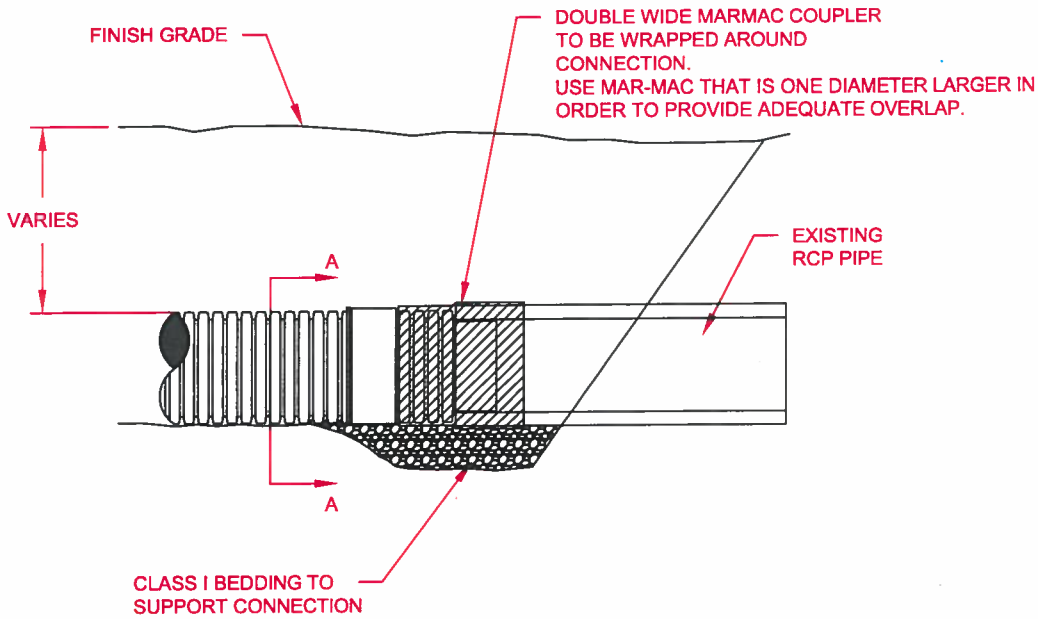

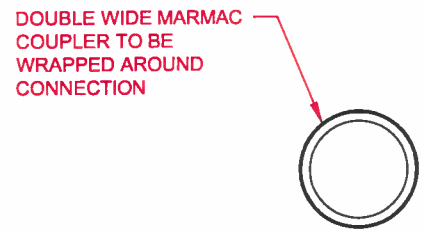

SECTION "A-A"

REV.	DESCRIPTION	BY	MM/DD/YY	CHK'D
2	FORMATTING UPDATES AND RENAMED	TJR	02/19/16	CKS

© 2016 ADS, INC.

ADVANCED DRAINAGE SYSTEMS, INC. ("ADS") HAS PREPARED THIS DETAIL BASED ON INFORMATION PROVIDED TO ADS. THIS DRAWING IS INTENDED TO DEPICT THE COMPONENTS AS REQUESTED. ADS HAS NOT PERFORMED ANY ENGINEERING OR DESIGN SERVICES FOR THIS PROJECT, NOR HAS ADS INDEPENDENTLY VERIFIED THE INFORMATION SUPPLIED. THE INSTALLATION DETAILS PROVIDED HEREIN ARE GENERAL RECOMMENDATIONS AND ARE NOT SPECIFIC FOR THIS PROJECT. THE DESIGN ENGINEER SHALL REVIEW THESE DETAILS PRIOR TO CONSTRUCTION. IT IS THE DESIGN ENGINEERS RESPONSIBILITY TO ENSURE THE DETAILS PROVIDED HEREIN MEETS OR EXCEEDS THE APPLICABLE NATIONAL, STATE, OR LOCAL REQUIREMENTS AND TO ENSURE THAT THE DETAILS PROVIDED HEREIN ARE ACCEPTABLE FOR THIS PROJECT.

HDPE TO RCP CONNECTION (MARMAC)

DRAWING NUMBER: STD-604

ADS
ADVANCED DRAINAGE SYSTEMS, INC.
4640 TRUEMAN BLVD
HILLIARD, OHIO 43026

DRAWN BY: K.J.M.
DATE:
CK'D BY:
SCALE: NTS
SHEET: 1 OF 1

DROP INLET			
MODEL NO.	A	B	*WEIGHT
DI242436	36"	42"	1900 LBS.
DI242448	48"	54"	2500 LBS.

*BOX ONLY

FRAME AND GRATE			
MODEL NO.	RATING	D	WEIGHT
SG2424–DIP	PEDESTRIAN	1 1/2"	41 LBS.
SG2424–DIT	TRAFFIC	3"	120 LBS.

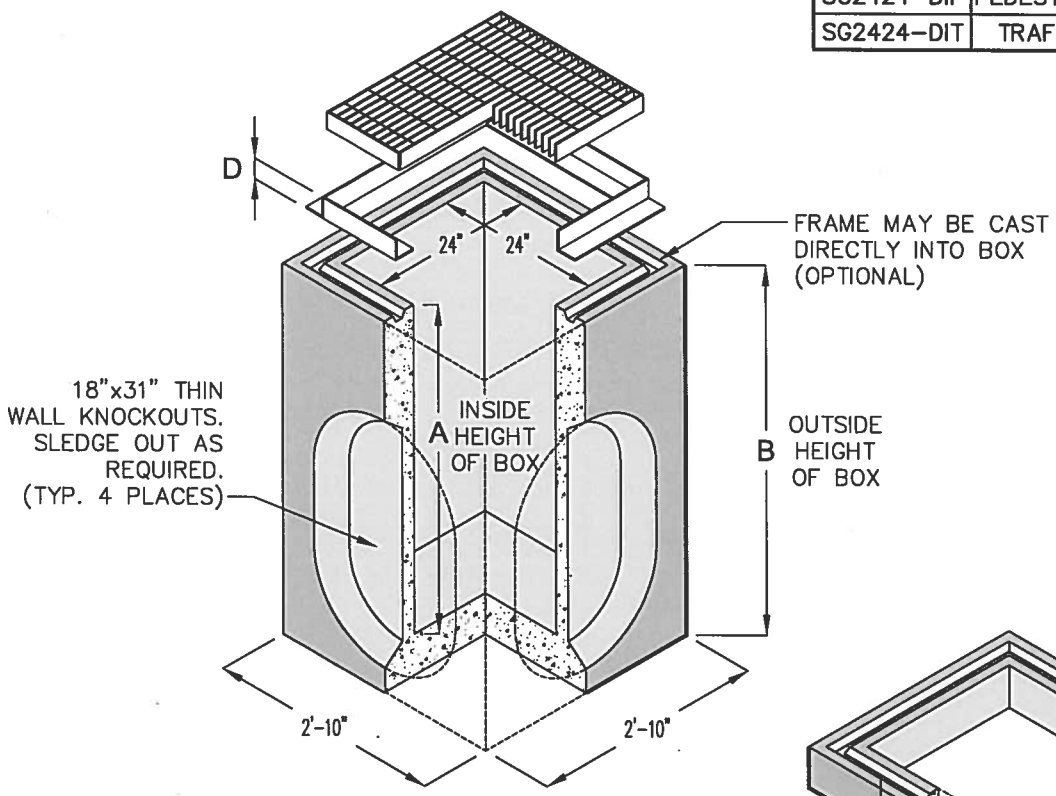

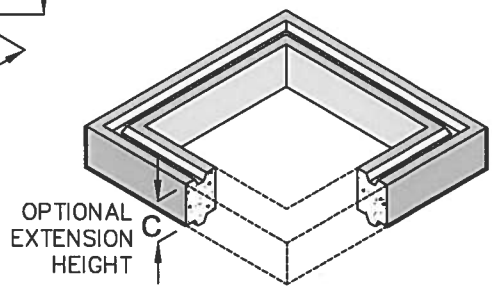

EXTENSION		
MODEL NO.	C	WEIGHT
RS242406	6"	300 LBS.
RS242412	12"	600 LBS.

- FRAME AND GRATE ASSEMBLY AVALIABLE IN TRAFFIC OR PEDESTRIAN MODELS.
- DESIGN FOR H-20-44 BRIDGE LOADING.
- ASSEMBLY TO BE PLACED ON A 6" BASE OF CRUSHER RUN FOR EASE OF INSTALLATION AND EVEN LOAD DISTRIBUTION.
- FOR COMPLETE DESIGN AND PRODUCT INFORMATION, CONTACT JENSEN PRECAST.
- ILLUSTRATION IS TYPICAL ONLY OF GENERAL SERIES CONFIGURATION: FOR SPECIFIC CONFIGURATION, CALL JENSEN PRECAST.

24" X 24" DRAIN INLET

JENSEN PRECAST

ORG. DWG. DATE 11-28-00

REV. DWG. DATE

DI2424

0 1 2 3

SCALE 1"=1'

CITY OF RANCHO MIRAGE

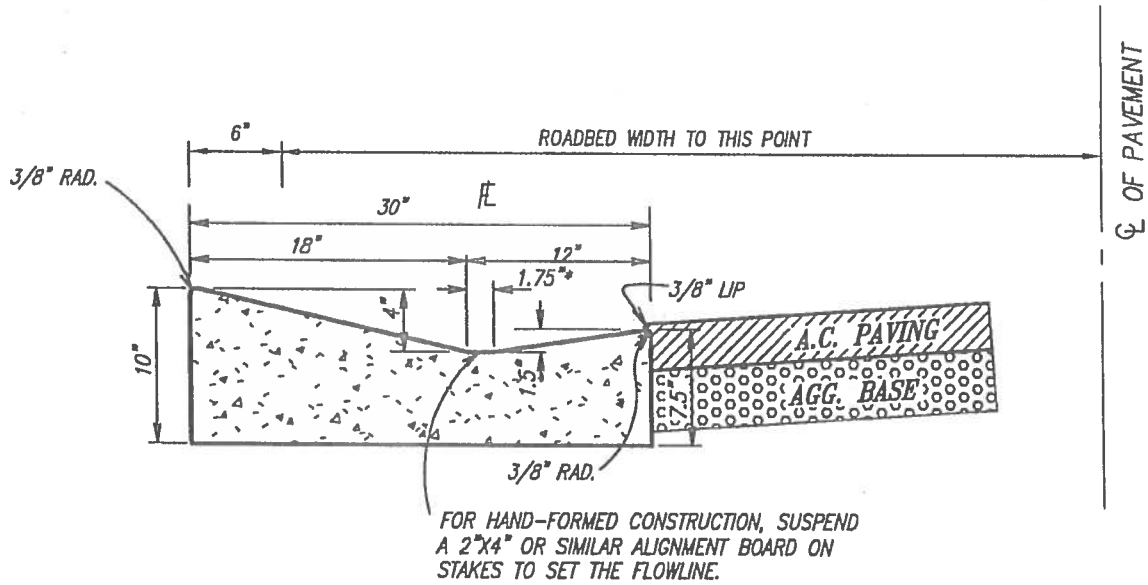

* CLASS 560-C-3250 CONCRETE (NO FLY ASH)
1.56 C.F./L.F.
1 C.Y. = 17.30 L.F.
MINIMUM PERMISSIBLE GRADE 0.50%
PROVIDE 3/8" LIP AT EDGE OF ASPHALT
MINIMUM SUBGRADE COMPACTION 95% RELATIVE TO MAXIMUM
MAX. GRADE BREAK ON ROADWAYS SHALL NOT EXCEED 0.50%
ALL GUTTER SHOULD BE "FLOW TESTED" DURING FINISHING
SEE STANDARD 206 FOR JOINT DETAILS

* USE CONCRETE CURING COMPOUND, ASTM C309/AASHTO M148, TYPE 2, CLASS A OR B, WITH WHITE PIGMENT. AFTER CURING, COMPOUND SHALL BE "POWER WASHED" OFF CURB TOP AND FACE BEFORE ANY CURB PAINTING

DRIVEWAY WIDTH ATTACHED TO WEDGE CURB SHALL BE IN ACCORDANCE WITH STANDARD 211

NOTE: THIS CURB IS INTENDED FOR PRIVATE RESIDENTIAL USE ONLY AND MUST BE PRE-APPROVED BY THE CITY ENGINEER PRIOR TO USE.

CITY OF RANCHO MIRAGE		STANDARD DETAIL 222
REVISIONS	RESIDENTIAL "WEDGE" CURB	
12/17/2001		
06/08/2004		
* 7/5/2012	7/12/12	
	APPROVED BY: CITY ENGINEER DATE	

CITY OF RANCHO MIRAGE

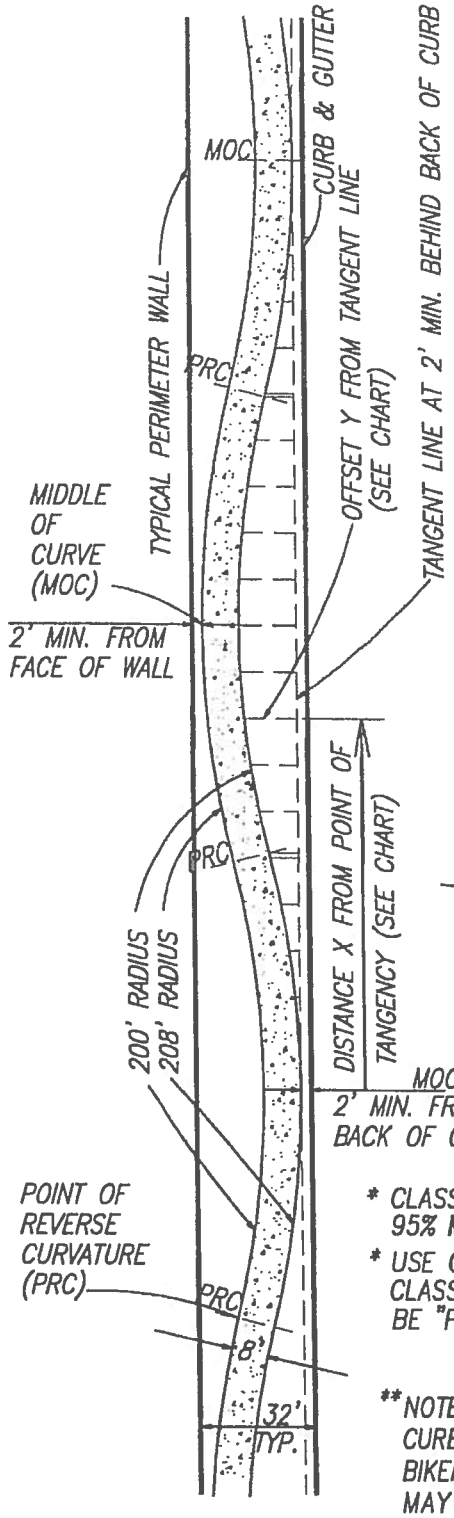

DESIGN CRITERIA:

* • R=200' MIN., 500' MAX.
(SEE CHARTS ON SHEET 2 OF 2 FOR R=200' DATA)

• PROVIDE A MINIMUM OF 2' CLEARANCE FROM OBSTRUCTIONS

• 10' MIN. TO BRANCHING TREES FROM CURB

• 5' MIN. TO BRANCHING TREES FROM BIKEPATH

• 3' MIN. TO PALM TREES FROM CURB OR BIKEPATH (SEE "LANDSCAPE SPECIFICATION AND DETAIL MANUAL")

* • IN SECTION 30, BIKEPATH WIDTH IS 6' AND CONCRETE IS COLORED "YOSEMITE BROWN"

* • BIKEPATH LAYOUT ON PLANS IS CONCEPTUAL ONLY, AND FINAL APPROVAL OF THE BIKEPATH LAYOUT SHALL BE MADE BY THE INSPECTOR PRIOR TO CONSTRUCTION.

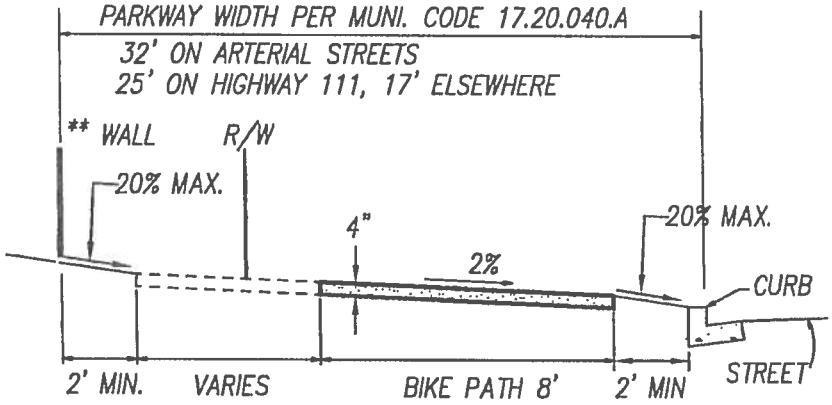

TYPICAL CROSS SECTION

* CLASS 560-C-3250 P.C.C. (NO FLY ASH) ON COMPACTED SUBGRADE 95% MIN. RELATIVE COMPACTION (SEE STD 206 FOR JOINT DETAILS)

* USE CONCRETE CURING COMPOUND, ASTM C309/AASHTO M148, TYPE 2, CLASS A OR B, WITH WHITE PIGMENT. AFTER CURING, COMPOUND SHALL BE "POWER WASHED" OFF CURB TOP AND FACE BEFORE ANY CURB PAINTING

**NOTE: TYPICAL ARTERIAL PARKWAYS ARE 32 FEET FROM CURB TO WALLS WITH BIKEPATH MEANDERING BETWEEN. BIKEPATH EASEMENTS OR ADDITIONAL RIGHT-OF-WAY MAY BE REQUIRED ON A CASE BY CASE BASIS.

CITY OF RANCHO MIRAGE		STANDARD DETAIL 500
REVISIONS	MEANDERING BIKE PATH	
12/04/2002		
10/29/2003		
* 7/5/2012	7/12/12	
	APPROVED BY: CITY ENGINEER DATE	SHEET 1 OF 2

CITY OF RANCHO MIRAGE

8' BIKEPATH WITH 19.50' OFFSET, TYPICAL FOR 32' PARKWAY

RADIUS	PT.	DIST. X	OFFSET Y
208'	MOC	0.00'	0.00'
208'		10.00'	0.24'
208'		20.00'	0.96'
208'		30.00'	2.17'
208'		40.00'	3.88'
208'		50.00'	6.10'
208'		60.00'	8.84'
208'/200'	PRC	63.54'	9.94'
200'		70.00'	11.90'
200'		80.00'	14.46'
200'		90.00'	16.48'
200'		100.00'	17.98'
200'		110.00'	18.96'
200'		120.00'	19.45'
200'	MOC	124.63'	19.50'
200'		130.00'	19.43'
200'		140.00'	18.91'
200'		150.00'	17.88'
200'		160.00'	16.35'
200'		170.00'	14.29'
200'		180.00'	11.68'
200'/208'	PRC	185.72'	9.94'
208'		190.00'	8.62'
208'		200.00'	5.92'
208'		210.00'	3.74'
208'		220.00'	2.07'
208'		230.00'	0.89'
208'		240.00'	0.21'
208'	MOC	249.25'	0.00'

MAXIMUM OFFSET 19.50'
PEAK TO PEAK 249.25'

8' BIKEPATH WITH 12.50' OFFSET, TYPICAL FOR 25' PARKWAY

RADIUS	PT.	DIST. X	OFFSET Y
208'	MOC	0.00'	0.00'
208'		10.00'	0.24'
208'		20.00'	0.96'
208'		30.00'	2.17'
208'		40.00'	3.88'
208'		50.00'	6.10'
208'/200'	PRC	51.09'	6.37'
200'		60.00'	8.41'
200'		70.00'	10.20'
200'		80.00'	11.48'
200'		90.00'	12.24'
200'		100.00'	12.50'
200'	MOC	100.22'	12.50'
200'		110.00'	12.26'
200'		120.00'	11.52'
200'		130.00'	10.27'
200'		140.00'	8.50'
200'/208'	PRC	149.35'	6.37'
208'		150.00'	6.21'
208'		160.00'	3.97'
208'		170.00'	2.24'
208'		180.00'	1.01'
208'		190.00'	0.26'
208'		200.00'	0.00'
208'	MOC	200.44'	0.00'

MAXIMUM OFFSET 12.50'
PEAK TO PEAK 200.44'

8' BIKEPATH WITH 4.50' OFFSET, TYPICAL FOR 17' PARKWAY

RADIUS	PT.	DIST. X	OFFSET Y
208'	MOC	0.00'	0.00'
208'		10.00'	0.24'
208'		20.00'	0.96'
208'		30.00'	2.17'
208'/200'	PRC	30.81'	2.29'
200'		40.00'	3.45'
200'		50.00'	4.23'
200'		60.00'	4.50'
200'	MOC	60.43'	4.50'
200'		70.00'	4.27'
200'		80.00'	3.54'
200'		90.00'	2.30'
200'/208'	PRC	90.05'	2.29'
208'		100.00'	1.05'
208'		110.00'	0.28'
208'		120.00'	0.00'
208'	MOC	120.86'	0.00'

MAXIMUM OFFSET 4.50'
PEAK TO PEAK 120.86'

CHART OF DISTANCES AND OFFSETS FOR R=200' FOR TYPICAL MEANDERING BIKEPATHS

NOTE: ADD 2' MINIMUM FROM BACK OF CURB TO OFFSETS FOR DISTANCE FROM CURB. IF THE DESIGN DOES NOT CONFORM TO ONE OF THE TYPICAL MEANDERING CHARTS ABOVE, A SIMILAR OFFSET CHART FOR THE DESIGN MAY BE REQUIRED TO BE PLACED ON THE STREET PLANS OR WHEREVER THE DESIGN FOR THE BIKEPATH IS OTHERWISE SHOWN.

CITY OF RANCHO MIRAGE		STANDARD DETAIL 500
REVISIONS	BIKE PATH OFFSETS	
12/04/2002		
10/29/2003		
* 7/5/2012	7/12/12	
	APPROVED BY: CITY ENGINEER DATE	SHEET 2 OF 2