CONTRACT DOCUMENTS AND SPECIFICATIONS

FOR

WHITEWATER PARK EXPANSION AND AMPHITHEATER CONSTRUCTION

71-560 San Jacinto Drive
Rancho Mirage, California 92270

PROJECT NO. CP 12-284

March 2014

Prepared by

For Landscape Portion:
HERMANN DESIGN GROUP
77-772 Flora Road, Suite A
Palm Desert, CA 92211
(760) 777-9131 FAX: (760) 777-9132

For Architectural Portion:
McAULIFFE &COMPANY, INC.
42-600 Caroline Court, Suite 102
Palm Desert, CA 92211
(760) 773-0907 FAX (760) 773-0967

For Civil Portion:
THE ALTUM GROUP
73-710 Fred Waring Drive, Suite 219
Palm Desert, CA 92260
(760) 346-4750 FAX: (760) 340-0089

Prepared for:

CITY OF RANCHO MIRAGE
69-825 Highway 111
Rancho Mirage, CA 92270
(760) 770-3224 FAX (760) 770-3261

SECTION 00003

PROJECT DIRECTORY

PROJECT LOCATION

WHITEWATER PARK
71-560 San Jacinto Drive
Rancho Mirage, California 92270

OWNER

CITY OF RANCHO MIRAGE
69-825 Highway 111
Rancho Mirage, California 92270

PROJECT LEAD & LANDSCAPE ARCHITECT

HERMANN DESIGN GROUP
77-772 Flora Road, Suite A
Palm Desert, California 92211
(760) 777-9131 Fax: (760) 777-9132

ARCHITECT

McAULIFFE & COMPANY, INC.
42-600 Caroline Court, Suite 102
Palm Desert, California 92211
(760) 773-0907 Fax: (760) 773-0967

STRUCTURAL:
BG STRUCTURAL ENGINEERING, INC.
75-175 Merle Dr., Suite 200
Palm Desert, California 92211
(760) 568-3553 FAX: (760) 568-5681

CIVIL:
THE ALTUM GROUP
73-710 Fred Waring Dr., Suite 219
Palm Desert, California 92260
(760) 346-4750 Fax: (760) 340-0089

SITE ELECTRICAL
MRC ENGINEERING, INC.
72-880 Fred Waring Dr., Suite C-11
Palm Desert, California 92260
(760) 340-9005

AMPHITHEATER MECHANICAL PLUMBING / ELECTRICAL:
EQUITY SPEC CONSULTING ENGINEERS, INC.
42-600 Caroline Ct., Suite 102
Palm Desert, California 92260
(760) 834-1537 Fax: (760) 832-3337

AUDIO-VISUAL CONSULTANT
CYM LIGHTING
72-248 North Shore St., Suite 105/106
1000 Palms, California 92276
(760) 343-1965 Fax: (760) 835-3684

GEOTECHNICAL ENGINEER
PETRA, INC.
3190 Airport Loop Dr., Suite J1
Costa Mesa, California 92626
(714) 549-8921 Fax: (714) 549-1438

ENVIRONMENTAL ENGINEERING
KUNZMAN ASSOCIATES, INC.
111 Town & Country, Suite 34
Orange, California 92868
(714) 973-8383 Fax: (714) 973-8821

SPECIFICATIONS
SPECTECH
79-645 Kingston Drive
Bermuda Dunes, California 92203
(760) 345-4808 Fax: (775) 249-6569

SIGNATURE AND APPROVALS

for

Whitewater Park Expansion and Amphitheater Construction
71-560 Sam Jacinto Drive
Rancho Mirage, California

PROJECT LEAD & LANDSCAPE ARCHITECT
HERMANN DESIGN GROUP
77-772 Flora Road, Suite A
Palm Desert, California 92211

3/7/14

REGISTERED LANDSCAPE ARCHITECT
CHRISTOPHER HERMANN NO.2754
Signature
4/30/14
Renewal Date
Date
STATE OF CALIFORNIA

ARCHITECT
McAULIFFE & COMPANY, INC.
42-600 Caroline Court, Suite 102
Palm Desert, California 92211
(760) 773-0907 Fax: (760) 773-0967

Michael T. McAuliffe, AIA
Michael T. McAuliffe, AIA (Feb 27, 2014)

LICENSED ARCHITECT
MICHAEL T. McAULIFFE
No. C-27929
REN. 04/30/15
STATE OF CALIFORNIA

CIVIL
THE ALTUM GROUP
73-710 Fred Waring Dr., Suite 219
Palm Desert, California 92260

James R. Bazua, PE (Mar 3, 2014)

REGISTERED PROFESSIONAL ENGINEER
JAMES RON BAZUA
No. 58394
Exp. 12/31/14
CIVIL
STATE OF CALIFORNIA

STRUCTURAL
BG STRUCTURAL ENGINEERING, INC
75-175 Merle Drive, Suite 200
Palm Desert, California 92211

Brian Gottlieb (Mar 3, 2014)

REGISTERED PROFESSIONAL ENGINEER
BRIAN GOTTLIEB
No. C33047
Exp. 6-30-14
CIVIL
STATE OF CALIFORNIA

SITE ELECTRICAL
MRC ENGINEERING, INC.
72-880 Fred Waring Dr., Suite C-11
Palm Desert, California 92260

Randall V. Moss
Randall V. Moss (Mar 5, 2014)

REGISTERED PROFESSIONAL ENGINEER
RANDALL V. MOSS
No. E13453
Exp. 09/30/14
ELECTRICAL
STATE OF CALIFORNIA

AMPHITHEATER MECHANICAL / PLUMBING / ELECTRICAL
EQUITY SPEC CONSULTING ENGINEERS, INC.
42-600 Caroline Ct., Suite 102
Palm Desert, California 92260

David A Celmer
David A Celmer (Mar 5, 2014)
Mechanical

REGISTERED PROFESSIONAL ENGINEER
DAVID A. CELMER
NO. M-22768
9/30/2014
RENEWAL DATE
STATE OF CALIFORNIA

David A Celmer
David A Celmer (Mar 5, 2014)
Plumbing

Joseph M. Nolan E9330
Joseph M. Nolan E9330 (Mar 5, 2014)
Electrical

REGISTERED PROFESSIONAL ENGINEER
JOSEPH M. NOLAN
E 9333
ELECTRICAL
EXP 9/30/2015
STATE OF CALIFORNIA

DEFERRED APPROVAL ITEMS

1. Fire Alarm System
2. Fire Suppression System

For each of the above items, the Contractor, subcontractor or supplier shall provide specifications, specific details, drawings, descriptive materials, shop drawings and structural calculations.

Structural calculations shall be signed by an engineer registered in California.

Installation of the above listed items of work shall not be started until detail plans, specifications and engineering calculations have been approved by the design professional in responsible charge and the Local Building Official. Upon receipt of the above material by the Architect, it will be reviewed in detail by the Architect and Structural Engineer of Record for this project. If acceptable, the Architect and Engineer of Record will sign and stamp the materials and submit to the Local Building Official for approval. Contractor shall furnish all additional calculations required if the Architect, Structural Engineer, or Local Building Official requests such additional information.

Contractor shall schedule and give prompt attention to the preparation and submittal of these deferred approval items. Extension of contract time will not be given if project is delayed due to not making submittals in a timely manner.

END OF SECTION

34-003 – 01/08/2014

SECTION 00010

TABLE OF CONTENTS

CITY OF RANCHO MIRAGE
WHITEWATER PARK EXPANSION AND AMPHITHEATER CONSTRUCTION
RANCHO MIRAGE, CALIFORNIA

EACH BIDDER SHALL EXAMINE THE PROJECT MANUAL TO DETERMINE THAT THE SECTIONS AND THE NUMBER OF PAGES OF THE SECTIONS CONFORM TO THE TABLE OF CONTENTS. THE FAILURE OF ANY BIDDER TO EXAMINE OR RECEIVE ANY PART OF THE PROJECT MANUAL WHICH IS INDICATED IN THE TABLE OF CONTENTS SHALL NOT RELIEVE THE BIDDER FROM THE OBLIGATIONS OF THE PROJECT MANUAL. NOTIFY ARCHITECT/DESIGNER OF ALL DISCREPANCIES.

	TITLE	PAGES
00001	Project Title Page	1
00003	Project Directory	1
00005	Standard Agreement for Public Works Construction	
00007	Signature Page	2
00008	Deferred Approvals	1
00010	Table of Contents	4
00020	Notice Inviting Sealed Bids	
00100	Instructions to Bidders	
00310	Proposal Documents	
00312	Contract Documents	
00700	General Provisions	
00800	Special Provisions	
DIVISION 1	**GENERAL REQUIREMENTS**	
01110	Summary of Work	5
11115	Requests for Information	2
01230	Alternates	1
01290	Application for Payment	3
01312	Project Meetings	3
01325	Progress Schedules and Reports	3
01334	Shop Drawings, Product Data and Samples	9
01422	Reference Standards	21
01457	Testing and Inspections	9
01630	Substitution Procedures	3
01740	Cleaning	2
01770	Closeout Submittals and Procedures	6
01785	Warranties	2
01789	Project Record Documents	3
DIVISION 2	**SITE CONSTRUCTION**	
02222	Demolition for Remodeling	8
02230	Site Clearing	4
02300	Earthwork	9
02310	Grading	7
02315	Excavating, Backfilling and Compacting for Structures	4
02316	Excavating, Backfilling and Compacting for Utilities	4
02362	Termite Control	4

02510	Water Distribution	7
02535	Sanitary Sewage System	4
02630	Storm Drainage	6
02743	Bituminous Concrete Paving	6
02750	Portland Cement Concrete Pavement	7
02763	Painted Traffic Lines and Markings	3
02782	Precast Concrete Pavers	6
02794	Synthetic Surfacing	2
02795	Playground Surfacing	4
02796	Synthetic Grass	3
02811	Irrigation Systems	12
02811	Drip Irrigation Systems	24
02821	Chain Link Fencing	9
02840	Parking Appurtenances	2
02870	Site Furnishings	2
02880	Play Equipment	25
02885	Play Field Equipment	3
02900	Planting	14
DIVISION 3	**CONCRETE**	
03100	Concrete Formwork and Accessories	6
03200	Concrete Reinforcement	6
03300	Cast-In-Place Concrete	14
03371	Shotcrete	7
03480	Precast Concrete Specialties	5
DIVISION 4	**MASONRY**	
04400	Cut Stone Assemblies	7
04821	Reinforced Concrete Unit Masonry	10
04905	Rock Staining	3
DIVISION 5	**METALS**	
05120	Structural Steel	7
05400	Cold-Formed Metal Framing	5
05500	Metal Fabrications	9
DIVISION 6	**WOOD AND PLASTICS**	
06100	Rough Carpentry	9
06174	Wood I-Joists	2
06180	Glue Laminated Wood	5
DIVISION 7	**THERMAL AND MOISTURE PROTECTION**	
07210	Building Insulation	8
07520	Adhered Roofing System	15
07550	Ballast Roofing System	15
07600	Flashing and Sheet Metal	6
07840	Firestopping	9
07900	Joint Sealers	7

DIVISION 8	**DOORS AND WINDOWS**	
08110	Steel Doors and Frames	6
08312	Access Panels	3
08710	Door Hardware	22
08800	Glazing	5
DIVISION 9	**FINISHES**	
09208	Metal Lath	6
09220	Portland Cement Plaster	5
09250	Gypsum Board	8
09310	Ceramic Tile	6
09546	Linear Metal Ceiling System	9
09680	Carpet	4
09960	High-Performance Coatings	12
09965	Graffiti-Resistant Coatings	3
09900	Paints and Coatings	6
DIVISION 10	**SPECIALTIES**	
10170	Plastic Toilet Compartments	4
10210	Wall Louvers	3
10350	Flagpoles	3
10400	Identification Devices	4
10523	Fire Extinguishers and Cabinets	3
10810	Toilet Accessories	7
DIVISION 11	**EQUIPMENT -** Not Used This Project	
DIVISION 12	**FURNISHINGS -** Not Used This Project	
DIVISION 13	**SPECIAL CONSTRUCTION**	
13010	Misting Fog System	5
DIVISION 14	**CONVEYING SYSTEMS -** Not Used This Project	
DIVISION 16	**SITE LANDSCAPE LIGHTING**	
16010	Basic Electrical Requirements	4
16050	Basic Electrical Materials	5
16111	Conduit and Wire	7
16160	Panelboards	3
16500	Lighting Fixtures	3
DIVISION 22	**PLUMBING**	
22 11 16	Domestic Water Piping	6
22 13 16	Sanitary Waste and Vent Water Piping	5
DIVISION 23	**HEATING, VENTILATING, AND AIR CONDITIONING**	

23 34 23	HVAC Power Ventilators	3
23 81 26	Ductless Split System Air Conditioners	3

DIVISION 26 **ELECTRICAL**

26 05 19	Electrical Power Conductors and Cables	4
26 05 33	Raceways and Boxes for Electrical Systems	8
26 05 53	Identification for Electrical Systems	5
26 24 13	Switchboards	7
26 24 16	Panelboards	7
26 27 26	Wiring Devices	6

END OF SECTION

34-003 – 03/09/2014

NOTICE INVITING SEALED BIDS FOR
WHITEWATER PARK EXPANSION and
AMPHITHEATER
Project No. CP 12-284

PUBLIC NOTICE IS HEREBY GIVEN that the City of Rancho Mirage, hereinafter referred to as AGENCY, invites sealed bids for the above-stated project and will receive such bids in the offices of the City Engineer up to the hour of **2:00 pm** on **Wednesday**, the **16th** day of **April, 2014** at which time they will be publicly opened and read aloud.

The work to be done consists of furnishing all materials, equipment, tools, labor, and incidentals as required by the Plans, Specifications and Contract Documents for the above-stated project. The general items of work to be done hereunder consist of amphitheater and related improvements, removal of existing improvements including, but not limited to, asphalt concrete pavement, aggregate base, removal of existing PCC concrete curb and gutter, PCC gutter, PCC sidewalk, handicapped ramps, and the construction of aggregate base, asphalt paving, PCC curb and gutter, PCC gutter, sidewalk, handicapped ramp, signing and striping, monument sign and foundation, storm drainage facilities, landscaping and irrigation repair, as well as all other appurtenant or related work as shown or referenced on the plans.

A non-mandatory pre-bid conference will be conducted at City Hall, which is located at 69825 Highway 111, Rancho Mirage, CA on Wednesday, **the 2nd day of April, 2014, at 10:00 a.m.** local time. Contractor(s) shall have the opportunity for clarification or interpretation of any point or points of question within the plans and contract documents or specifications.

Funding for the work is with all local funds and, as provided under City Charter, this contract will not require compliance with prevailing wage requirements of the State of California.

The AGENCY hereby ensures that minority business enterprises will be afforded full opportunity to submit bids in response to this notice and will not be discriminated against on the basis of race, color, national origin, ancestry, sex, or religion in any consideration leading to the award of contract.

The contract documents call for monthly progress payments based upon the engineers' estimate of the percentage of work completed. The AGENCY will retain 5 percent of each progress payment as security for completion of the balance of the work. At the request and expense of the successful bidder, the City will pay the amounts so retained upon compliance with the requirements of Public Contract Code, Part 5, Section 22300 and the provisions of the contract documents pertaining to Substitution of Securities.

Bids must be prepared on the approved proposal forms in conformance with the Instructions to Bidders and submitted in a sealed envelope plainly marked on the outside **"SEALED BID FOR WHITEWATER PARK EXPANSION and AMPHITHEATER IMPROVEMENTS, PROJECT NO. CP 12-284 DO NOT OPEN WITH REGULAR MAIL."** City staff will not be available to respond to questions on the day of bid opening.

The AGENCY reserves the right to reject any or all bids, to waive any irregularity, to accept any bid or portion thereof, and to take all bids under advisement for a period of sixty (60) days.

At the time of contract award, the prime contractor shall possess a valid **Class A or Class B contractor's license.**

BY ORDER OF the City Council of the City of Rancho Mirage.

Dated March 10, 2014

By_____

Vallerie Walthour, Public Works Department Secretary
City of Rancho Mirage
69-825 Highway 111
Rancho Mirage, CA 92270
(760) 770-3224

INSTRUCTIONS TO BIDDERS

PROPOSAL FORMS

Bids shall be submitted in writing on the Proposal forms provided by the CITY. All information requested therein must be clearly and legibly set forth in the manner and form indicated. The CITY will not consider any proposal not meeting these requirements.

PRE-BID CONFERENCE

A non-mandatory pre-bid conference will be conducted at City hall, which is located at 69825 Highway 111, Rancho Mirage, CA on **the 2nd** day **of April, 2014,** at **10:00 a.m.** local time. Contractor(s) shall have the opportunity for clarification or interpretation of any point or points of question within the plans and contract documents or specifications.

PROPOSAL GUARANTEE (BID BOND)

Proposals must be accompanied by a proposal guarantee consisting of a certified check or bid bond payable to the CITY in the amount of ten percent (10%) of the total amount bid. Any proposal not accompanied by such a guarantee will not be considered. If a bidder to whom a contract is awarded fails or refuses to execute the contract documents or furnish the required insurance policies and bonds as set forth in those documents, the proposal guarantee shall be forfeited to the CITY. The proposal guarantees of all bidders will be held until the successful bidder has properly executed all contract documents.

NONCOLLUSION AFFIDAVIT

Bidder shall declare that the only persons or parties interested in the proposal as principals are those named therein; that no officer, agent, or employee of the CITY is personally interested, directly or indirectly, in the proposal; that the proposal is made without connection to any other individual, firm, or corporation making a bid for the same work; and that the proposal is in all respects fair and without collusion or fraud. The Noncollusion Affidavit shall be executed and submitted with the proposal.

PROPOSAL BID SHEET

Bidders shall give unit prices for each and all of the items set forth. No aggregate bids shall be considered. The bidder shall set forth for each item of work, in clearly legible figures, a unit item price and a total for the item in the respective spaces provided for this purpose. The quantities listed in the Bid sheets are supplied to give an indication of the general scope of work, but the accuracy of figures is not guaranteed and the bidder shall make his/her own estimates from the drawings. In case of a variation between the unit price and the totals shown by the bidder, the unit price shall be considered to be the bid.

DELIVERY OF PROPOSAL

Proposals may be mailed or delivered by messenger. However, it is the bidder's responsibility alone to ensure delivery of the proposal to the hands of the CITY'S designated official prior to the bid opening hour stipulated in the "Notice Inviting Sealed Bids." Late proposals will not be considered. Proposals shall be enclosed in a sealed envelope plainly marked on the outside, "SEALED BID FOR WHITEWATER PARK EXPANSION and AMPHITHEATER, PROJECT NO. 12-284 - DO NOT OPEN WITH REGULAR MAIL."

WITHDRAWAL OF PROPOSALS

A proposal may be withdrawn by a written request signed by the bidder. Such requests must be delivered to the CITY'S designated official prior to the bid opening hour stipulated in the "Notice Inviting Sealed Bids." The withdrawal of a proposal will not prejudice the right of the bidder to submit a new proposal, providing there is time to do so. Proposals may not be withdrawn after said hour without forfeiture of the proposal guarantee.

IRREGULAR PROPOSALS

Unauthorized conditions, limitations, or provisions attached to a proposal will render it irregular and may cause its rejection. The completed proposal forms shall be without interlineations, alterations, or erasures. Alternative proposals will not be considered unless specifically requested. No oral, telegraphic, or telephonic proposal, modification, or withdrawal will be considered.

TAXES
No mention shall be made in the proposal of Sales Tax, Use Tax, or any other tax, as all amounts bid will be deemed and held to include any such taxes that may be applicable.

DISQUALIFICATION OF BIDDERS
In the event that any bidder acting as a prime contractor has an interest in more than one proposal, all such proposals shall be rejected, and the bidder disqualified. This restriction does not apply to subcontractors or suppliers who may submit quotations to more than one bidder, and while doing so, may also submit a formal proposal as a prime contractor.

No contract will be executed unless the bidder is licensed in accordance with the provisions of the State Business and Professions Code.

INTERPRETATION OF PLANS AND DOCUMENTS
If any person contemplates submission of a bid for the proposed contract and is in doubt as to the true meaning of any part of the plans, specifications or other proposed contract documents, or finds discrepancies in, or omissions from, the drawings or specifications, he may submit to the Engineer of said CITY a written request for an interpretation or correction thereof. The person submitting the request shall be responsible for its prompt delivery. Any interpretation or correction of the proposed documents shall be made only by addendum duly issued and copy of such addendum shall be mailed or delivered to each person receiving a set of such documents. The Engineer will not be responsible for any other explanation or interpretations of the proposed documents.

ADDENDA OR BULLETINS
The effect of all addenda to the Contract Documents shall be considered in the bid, and said addenda shall be made a part of the contract documents and shall be returned with them. Before submitting his/her bid, each bidder shall inform himself as to whether or not any addenda have been issued, and failure to cover in this bid any such addenda issued may render his/her bid irregular and may result in its rejection by the City.

LEGAL RESPONSIBILITIES
All proposals must be submitted, filed, made, and executed in accordance with State and Federal laws relating to bids for contracts of this nature whether the same or expressly referred to herein or not.

Any bidder submitting a proposal shall by such action thereby agree to each and all of the terms, conditions, provisions, and requirements set forth, contemplated, and referred to in the Plans, Specifications, and Contract Documents, and to full compliance therewith.

AWARD OF CONTRACT
Following a review of the bids, the AGENCY shall determine whether to award the bid or to reject all bids. The award of contract, if made, shall be to the lowest responsible Bidder as determined solely by the AGENCY. At the time of contract award, the successful bidder shall hold a Class A or Class B contractor's license, as required to perform the work, issued by the State of California. Additionally, the AGENCY reserves the right to reject any or all proposals, to accept any bid or portion thereof, to waive any irregularity, and to take the bids under advisement for the period of time stated in the "Notice Inviting Sealed Bids," all as may be required to provide for the best interests of the AGENCY. In no event will an award be made until all necessary investigations are made as to the responsibility and qualifications of the bidder to whom the award is contemplated.

No bidder may withdraw his/her proposal for a period of sixty (60) days after the time set for opening thereof. However, the CITY will return all proposal guarantees within ten (10) days after the award of the contract or rejection of the bids, as the case may be, to the respective bidders whose proposals they accompany

LABOR CODE
Funding for the Work is with all local funds and, as provided under City Charter, will NOT require compliance with the prevailing wage requirements of the State of California. The possibility of wage increases is one of the elements to be considered by the CONTRACTOR in determining his/her bid, and will not under any circumstances be considered as the basis of a claim against the CITY on the contract.

The CONTRACTOR and subcontractors shall comply with Section 1777.6 which stipulates that it shall be unlawful to refuse to accept otherwise qualified employees as registered apprentices solely on the grounds of race, religion, creed, color, national origin, ancestry, sex, or age, except as provided in Section 3077, of such employee.

WORKERS COMPENSATION CERTIFICATE

Section 3700 of the State Labor Code requires that every employer shall secure the payment compensation by either being insured against liability to pay compensation with one or more insurers or by securing a Certificate of Consent to Self-Insure from the State of California Director of Industrial Relations.

In accordance with this section and with Section 1861 of the State of California Labor Code, the CONTRACTOR shall sign a Compensation Insurance Certificate which is included with the Contract Agreement, and submit same to CITY along with the other required contract documents prior to performing any work. Reimbursement for this requirement shall be considered as included in the various items of work.

CLAYTON ACT AND CARTWRIGHT ACT

Section 4551 of the State Government Code specifies that in executing a public works contract with the City to supply goods, services or materials, the CONTRACTOR or Subcontractor offers and agrees to assign to the CITY all rights, title and interest in and to all causes of action it may have under Section 4 of the Clayton Act (15 U.S.C. Sec. 15) or under the Cartwright Act (Chapter 2 commencing with Sec. 16700) of Part 2 of Division 7 of the Business and Professions Code, arising from purchase of goods, services or materials pursuant to the contract or subcontract. This assignment shall become effective when the AGENCY tenders final payment to the CONTRACTOR without further acknowledgment by the parties.

SUBSTITUTION OF SECURITIES

In conformance with the State of California Public Contract Code, Part 5, Section 22300, the CONTRACTOR may substitute securities for any monies withheld by the CITY to ensure performance under the contract.

At the request and expense of the CONTRACTOR, the CONTRACTOR has the option to set up an escrow agreement account with a local bank for direct deposit of the retention or deposit securities which have been approved by the CITY and deposited with a state or federally chartered bank as the escrow agent. Said securities will be used as a substitute for retention earnings required to be withheld by the CITY, pursuant to the construction contract. Said securities shall be solely for this project. When the CONTRACTOR deposits the CITY-approved securities with the escrow agent, the escrow agent shall notify the CITY within 10 calendar days of the deposit. Said securities shall be evaluated quarterly by the escrow agent to verify the current market value. If the current market value of said securities falls below the required amount, the escrow agent shall notify the CONTRACTOR and require additional securities and/or cash be submitted for CITY approval and be held in the escrow account to meet the CONTRACTOR'S obligations. Said securities shall be held by the escrow agent until such time as the escrow agent receives written notification from the CITY that the CONTRACTOR has satisfactorily completed his/her contract obligations.

The type of escrow account or types of securities deposited and the method of release shall be approved by the City Attorney's office.

BID PROPOSAL

BIDDER'S NAME _____

TO CITY OF RANCHO MIRAGE, as CITY:

In accordance with CITY'S "Notice Inviting Sealed Bids", the undersigned BIDDER hereby proposes to furnish all materials, equipment, tools, labor, and incidentals required for the above-stated project as set forth in the Plans, Specifications, and Contract Documents therefore, and to perform all work in the manner and time prescribed therein.

BIDDER declares that this proposal is based upon careful examination of the work site, Plans, Specifications, Instructions to Bidders, and Contract Documents. If this proposal is accepted for award, BIDDER agrees to enter into a contract with CITY at the unit and/or lump sum prices set forth in the following Proposal Bid Sheets. BIDDER understands that failure to enter into a contract in the manner and time prescribed will result in forfeiture to CITY of the Bid Bond accompanying this proposal.

BIDDER understands that a bid is required for the entire work, that the estimated quantities set forth in the Proposal Bid Sheet are solely for the purpose of comparing bids, and that final compensation under the contract will be based upon the actual quantities of work satisfactorily completed. It is agreed that the unit and/or lump sum prices bid include all appurtenant expenses, taxes, royalties, and fees. In the case of discrepancies in the amounts bid, unit prices shall govern over extended amounts.

BIDDER agrees and acknowledges that he is aware of the provisions of Section 3700 of the Labor Code which requires that every employer be insured against liability for workers compensation or to undertake self-insurance in accordance with the provisions of that code, and that the successful BIDDER shall comply with such provisions of that code before commencing the performance of the Contract.

BIDDER certifies that in all previous contracts or subcontracts, all reports that may have been due under the requirements of any agency, state, or federal equal employment opportunity orders have been satisfactorily filed, and that no such reports are currently outstanding.

BIDDER declares that the only persons or parties interested in this proposal as principals are those named herein; that no officer, agent, or employee of the CITY is personally interested, directly or indirectly, in this proposal; that this proposal is made without connection to any other individual, firm, or corporation making a bid for the same work; and that this proposal is in all respects fair and without collusion or fraud.

DATED_____, 20__ BIDDER_____

(BY)_____

TITLE_____

BIDDER'S ADDRESS:

_____

_____

PHONE:_____

FAX:_____

BIDDER'S INFORMATION

BIDDER certifies that the following information is true and correct.

Bidder's Name_____

Business Address_____

_____

Telephone_____

State Contractor's License No. and Class_____

Original Date Issued_____ Expiration Date _____

The following are the names, titles, addresses, and phone numbers of all individuals, firm members, partners, joint ventures, and/or corporate officers having a principal interest in this proposal:

_____

_____

_____

_____

The dates of any voluntary or involuntary bankruptcy judgments against any principal having an interest in this proposal are as follows:

_____

_____

_____

All current and prior dbas, aliases, and/or fictitious business names for any principal having an interest in this proposal are as follows.

_____

_____

_____

LIST OF SUBCONTRACTORS

The Bidder's attention is directed to provision in Section 2-3 of the Standard Specifications for the Requirements and Conditions that he must observe in the preparation of the proposal form and the submission of the bid.
BIDDER proposes to subcontract certain portions of the work as follows:

Subcontractor Name	License No.	Location of Business	Percent of Total Contract	Specific Description of Subcontract

REFERENCES

The following are the names, addresses, and phone numbers for three public agencies or private clients for which BIDDER has performed similar work within the past two years:

_____

_____

_____

_____

_____

_____

_____

_____

_____

_____

_____

DESIGNATOR OF SURETIES

The following are the names, addresses, and phone numbers for all brokers and sureties from whom BIDDER intends to procure insurance and bonds:

_____

_____

_____

_____

_____

_____

_____

_____

_____

_____

BID BOND

KNOW ALL MEN BY THESE PRESENTS that _____ _____, as BIDDER, and as SURETY, are held and firmly bound unto the CITY OF RANCHO MIRAGE, as AGENCY, in the penal sum of dollars ($_____), which is ten percent (10%) of the total amount bid by BIDDER to AGENCY for the above-stated project, for the payment of which sum BIDDER and SURETY agree to be bound jointly, severally and firmly by these presents.

THE CONDITIONS OF THIS OBLIGATION ARE SUCH that, whereas BIDDER is about to submit a bid to AGENCY for the above-stated project, if said bid is rejected, or if said bid is accepted and a contract is awarded and entered into by BIDDER in the manner and time specified, then this obligation shall be null and void; otherwise, it shall remain in full force and effect in favor of AGENCY.

WITNESS our hands this _____ day of _____, 20__. (seal)

_____
CONTRACTOR (CORPORATION)-TYPE

By:_____
President

By: _____
Secretary/Treasurer

NOTE: SIGNATURE OF CORPORATE OFFICIALS MUST BE NOTARIZED.

BID BOND - page 2

(seal)

_____
SURETY'S NAME-TYPE

_____
Mailing Address

By:_____
Name

_____
Title

NOTE: SIGNATURE OF SURETY MUST BE NOTARIZED

NONCOLLUSION AFFIDAVIT

STATE OF CALIFORNIA)

)

COUNTY OF)

_____, being first duly sworn, deposes and says that he is (sole owner, a partner, president, etc.) of _____ the party making the foregoing bid;

That such bid is not made in the interest of or on behalf of any undisclosed person, partnership, company, association, organization or corporation; that such bid is genuine and not a collusive or sham bid, or that anyone shall refrain from bidding; that said bidder has not in any manner, directly or indirectly, sought by agreements, communication or conference with anyone to fix the bid price of said bidder or of any other bidder, or to fix the overhead, profit, or cost element of such bid price, or of that of any other bidder, or to secure any advantage against the public body awarding the contract or anyone interested in the proposed contract; that all statements contained in such bid are true, and further, that said bidder has not, directly or indirectly submitted his/her bid price, or any breakdown thereof, or the contents thereof, or divulged information or data relative thereto, or paid and will not pay any fee in connection, organization, bid depository, or to any member or persons as have a partnership or other financial interest with said bidder in his/her general business.

Signed:_____

Title: _____

WHITEWATER PARK EXPANSION AND AMPHITHEATER
CP 12-284
BID PROPOSAL SHEET

ITEM NO.	DESCRIPTION	QTY	UNIT PRICE	TOTAL PRICE
	LANDSCAPE PREPARATION			
1.	Mobilization/Traffic Control/Bonds/Insurance	1 LS	LS	$ _____
2.	Clearing/Grubbing/SWPPP and LAQMP (Includes Tree Stump Removal)	1 LS	LS	$ _____
3.	Remove Existing Asphalt Paving and Base	11,848 SF	$ _____	$ _____
4.	Remove Existing Concrete Paving and Base	454 SF	$ _____	$ _____
5.	Remove Existing Drinking Fountain	2 EA	$ _____	$ _____
6.	Remove Existing Concrete Sidewalk	13,015 SF	$ _____	$ _____
7.	Remove Existing Concrete Curb	985 LF	$ _____	$ _____
8.	Sawcut Existing Curb Face Horizontally and Protect in Place Lower Portion of Curb	24 LF	$ _____	$ _____
9.	Remove Existing Concrete Bench	7 EA	$ _____	$ _____
10.	Remove Existing Concrete/Block Wall	104 LF	$ _____	$ _____
11.	Sawcut Existing Pavement and Base	544 LF	$ _____	$ _____
12.	Remove Existing Playground Equipment	1 LS	$ _____	$ _____
13.	Remove Existing Bollard	6 EA	$ _____	$ _____
14.	Remove Existing BBQ	2 EA	$ _____	$ _____
15.	Remove Existing Water Feature and Foundation	1 EA	$ _____	$ _____
16.	Remove Existing Baseball Back Stop	1 EA	$ _____	$ _____
17.	Remove Existing Dry Well and Piping	2 EA	$ _____	$ _____
18.	Remove Existing Flagpole and Foundation	3 EA	$ _____	$ _____
19.	Remove Existing Light Pole	12 EA	$ _____	$ _____
20.	Remove and Relocate Sign and Post	1 EA	$ _____	$ _____
21.	Remove Existing Irrigation Lines, Control Wire, and Appurtenances	1 LS	LS	$ _____
22.	Remove Existing Concrete Trash Enclosure	1 LS	LS	$ _____
23.	Remove and Salvage Existing Signs and Posts	1 LS	LS	$ _____
24.	Remove and Reuse Existing Rock/Cobble	1 LS	LS	$ _____
25.	Remove Existing Striping	1 LS	LS	$ _____
26.	Adjust Cable Box to Grade w/Heavy Duty Traffic Rated Lid	1 LS	LS	$ _____
	Subtotal – Items 1 – 26			**$** _____
	GRADING/WET AND DRY UTILITIES			
27.	Grading/Earthwork	1 LS	LS	$ _____
28.	Fire - 4" DIP Water Line and Plug	123 LF	$ _____	$ _____
29.	2" PVC Potable Water Service and Cap	1,215 LF	$ _____	$ _____
30.	4" Cap for Sprinkler Connection	1 EA	$ _____	$ _____
31.	1" PVC Potable Water Service and Cap	415 LF	$ _____	$ _____
32.	4" PVC Sleeves for Irrigation	95 LF	$ _____	$ _____
33.	Water/Sewer - Connection to Building	1 LS	$ _____	$ _____
34.	6" VCP Sewer Line	25 LF	$ _____	$ _____

ITEM NO.	DESCRIPTION	QTY	UNIT PRICE	TOTAL PRICE
35.	6" PVC Sewer Line	41 LF	$ _____	$ _____
36.	Dry Well and Piping per City Standard Detail 306	3 EA	$ _____	$ _____
37.	6" Sewer Cap and Marker	1 EA	$ _____	$ _____
38.	ADS Storm Drain 24" x 4" Tee	7 EA	$ _____	$ _____
39.	ADS 24" Weir Structure	1 EA	$ _____	$ _____
40.	Storm Drain - 24" PVC Pipe	801 LF	$ _____	$ _____
41.	Storm Drain - 18" PVC	196 LF	$ _____	$ _____
42.	Storm Drain - 15" PVC	72 LF	$ _____	$ _____
43.	Storm Drain - 12" PVC	478 LF	$ _____	$ _____
44.	Storm Drain - 8" PVC	294 LF	$ _____	$ _____
45.	Storm Drain - 6" PVC	208 LF	$ _____	$ _____
46.	Storm Drain - Junction Structure (Per Greenbook Standard 320-1)	1 EA	$ _____	$ _____
47.	Storm Drain - 24"x24" Precast Drain Inlet	3 EA	$ _____	$ _____
48.	Storm Drain - 18"x18" Precast Drain Inlet	4 EA	$ _____	$ _____
49.	Storm Drain - 15" Dome Area Drain Inlet	2 EA	$ _____	$ _____
50.	Modified Drain Box	9 EA	$ _____	$ _____
51.	Area Sub-Drain	4 EA	$ _____	$ _____
52.	12" Pro Series Channel Drains #843 w/Cast Iron Grate	36 LF	$ _____	$ _____
53.	NDS 6" Dura Slope Channel Drains w/Cast Iron Grate	86 LF	$ _____	$ _____
54.	Dry Utility Joint Trench - Connection to Building	200 LF	$ _____	$ _____
	Subtotal – Items 27 – 54			**$** _____
	CONSTRUCTION – SITE AMENITIES			
55.	Pickle Ball Courts – Includes 4 Pole Lights/Fencing/Windscreen	1 LS	LS	$ _____
56.	Relocate Existing Fire Truck and Shade Cover	1 LS	LS	$ _____
57.	Flagpole	3 EA	$ _____	$ _____
58.	Two-Bay Swing Set	1 LS	LS	$ _____
59.	Play Structure – Large	1 LS	LS	$ _____
60.	Play Structure – Small	1 LS	LS	$ _____
61.	Rock Climber Equipment 3 – Medium	1 LS	LS	$ _____
62.	Natural Boulder Climbing Area	1 LS	LS	$ _____
63.	Fitness Course – Complete (Includes Foundations)	1 LS	LS	$ _____
64.	Rubber Surface with Artificial Turf	1,650 SF	$ _____	$ _____
65.	10" x 16" Concrete Play Area Curb	449 LF	$ _____	$ _____
66.	10" Thick Fibar® Engineered Wood Fiber Chips	8,800 SF	$ _____	$ _____
67.	Bike Rack	1 EA	$ _____	$ _____
68.	Bench (6')	18 EA	$ _____	$ _____
69.	Drinking Fountain	3 EA	$ _____	$ _____
70.	Drinking Fountain (Sump)	3 EA	$ _____	$ _____
71.	Sign – Monument	1 EA	$ _____	$ _____
72.	Trash Receptacle	8 EA	$ _____	$ _____
	Subtotal – Items 55 – 72			**$** _____

ITEM NO.	DESCRIPTION	QTY	UNIT PRICE	TOTAL PRICE
	WALLS/FENCES			
73.	Split Rail Poly Fence – Play Area	175 LF	$ _____	$ _____
74.	Remove Existing Equestrian Trail Fence	1 LS	LS	$ _____
	Subtotal – Items 73 – 74			**$** _____
	HARDSCAPE			
75.	6" Concrete Curb, Type D per City Standard Detail 203	1,484 LF	$ _____	$ _____
76.	6" Concrete Curb, Type A per City Standard Detail 200	330 LF	$ _____	$ _____
77.	0" Concrete Curb	422 LF	$ _____	$ _____
78.	Modified Type C Curb per City Standard Detail 202	15 LF	$ _____	$ _____
79.	Curb in Existing Pavement per City Standard Detail 208	395 LF		
80.	6" Concrete Taper Curb End	4 EA	$ _____	$ _____
81.	Concrete 4' Wide Valley Gutter per City Standard Detail 220	579 SF	$ _____	$ _____
82.	Utility Trench Pavement Replacement	206 SF	$ _____	$ _____
83.	Modified Cross-Gutter	496 SF	$ _____	$ _____
84.	Through-Curb Drain	3 EA	$ _____	$ _____
85.	Concrete Driveway Approach per City Standard Detail 223	395 SF	$ _____	$ _____
86.	3" Asphaltic Concrete Pavement over 4" CL 2 Base - Parking Areas	20,343 SF	$ _____	$ _____
87.	ORCO Turfblock Interlocking Pavers - CVWD Easement	6,472 SF	$ _____	$ _____
88.	Interlocking Decorative Vehicle Pavers - Over 1" Sand and 4" CL 2 Base	9,880 SF	$ _____	$ _____
89.	Promenade Pedestrian Pavers - Over 1" Sand and 4" CL 2 Base	2,366 SF	$ _____	$ _____
90.	Sidewalk 4" Thick Colored Concrete Sidewalk (Width and Color Per Plans)	19,473 SF	$ _____	$ _____
91.	Sidewalk 4" Thick Decorative Pedestrian Sidewalk Over Compacted Base	11,817 SF	$ _____	$ _____
92.	8" Thick Color Concrete Paving over 6" CL 2 Base - Drop Off Area Banding	5,090 SF	$ _____	$ _____
93.	Amphitheater Mezzanine Path and Seating Area - 2" StaLok over 4" CL 2 Base	4,543 SF	$ _____	$ _____
94.	Landscape Mow Curb - 6" x 4"	2,200 LF	$ _____	$ _____
95.	Concrete Bollard - Drop Off Area	8 EA	$ _____	$ _____
96.	6" Removable Bollard	1 EA	$ _____	$ _____
97.	12" Wide End Stall Concrete in Planter Area	358 SF	$ _____	$ _____
98.	Concrete Wheel Stop	6 EA	$ _____	$ _____
99.	Truncated Dome Detectable Warning Panel	84 SF	$ _____	$ _____
100.	Signage/Striping/Markers	1 LS	LS	$ _____
101.	ADA Pedestrian Ramp	3 EA	$ _____	$ _____
102.	Pipe Gates Per CVWD Standard with Type 1 Object Marker	2 EA	$ _____	$ _____
	Subtotal – Items 75 – 102			**$** _____

ITEM NO.	DESCRIPTION	QTY	UNIT PRICE	TOTAL PRICE
	LANDSCAPING – WHITEWATER PARK			
103.	Soil Prep / Fine Grading	1 LS	LS	$ _____
104.	Turfgrass Sod (Includes upper terrace and amphitheater seating areas) – Type per Plan	70,000 SF	$ _____	$ _____
105.	Turfblock Sod	6,472 SF	$ _____	$ _____
106.	Shrubs - 1 Gallon	143 EA	$ _____	$ _____
107.	Shrubs - 5 Gallon	834 EA	$ _____	$ _____
108.	Vines - 5 Gallon	29 EA	$ _____	$ _____
109.	24" Box Trees (Install and Guarantee Only)	34 EA	$ _____	$ _____
110.	36" Box Trees (Install and Guarantee Only)	16 EA	$ _____	$ _____
111.	48" Box Trees (Install and Guarantee Only)	28 EA	$ _____	$ _____
112.	60" Box Tree (Install and Guarantee Only)	1 EA	$ _____	$ _____
113.	Date Palm Trees - 24' BTH (Provide Irrigation per Plan)	34 EA	$ _____	$ _____
114.	Decomposed Granite - 2" Depth	300 TONS	$ _____	$ _____
115.	Irrigation System – Complete and Operational (Includes upper terrace and lower bowl amphitheater seating area subterranean systems)	1 LS	LS	$ _____
116.	90-Day Maintenance Period	1 LS	LS	$ _____
	Subtotal – Items 103 – 116			**$** _____
	LANDSCAPING – BUTTON ROAD			
117.	Soil Prep/Fine Grade	1 LS	LS	$ _____
118.	24" Box Trees (Install and Guarantee Only)	10 EA	$ _____	$ _____
119.	5-Gallon Shrubs	26 EA	$ _____	$ _____
120.	Decomposed Granite - 2" Depth	1 LS	LS	$ _____
121.	Irrigation System – Complete and Operational	1 LS	LS	$ _____
122.	90-Day Maintenance Period	1 LS	LS	$ _____
	Subtotal – Items 117 – 122			**$** _____
	AMPHITHEATER CONSTRUCTION			
	Concrete			
123.	Building Slabs, Platform Slab, Foundations and Footings	1 LS	LS	$ _____
124.	Site Retaining, Terrace Seating Walls and Footings	1 LS	LS	$ _____
125.	Shotcrete Retaining Walls and Footings	1 LS	LS	$ _____
	Subtotal – Items 123 – 125			**$** _____
126.	Masonry	1 LS	LS	$ _____
	Subtotal – Item 126			**$** _____
	Metals			
127.	Metals – Cold Formed Metal Framing	1 LS	LS	$ _____
128.	Metal Fabrications	1 LS	LS	$ _____
129.	Structural Steel	1 LS	LS	$ _____
	Subtotal – Items 127 - 129			**$** _____

ITEM NO.	DESCRIPTION	QTY	UNIT PRICE	TOTAL PRICE
	Thermal and Moisture Protection			
130.	Roofing Systems	1 LS	LS	$ _____
131.	Thermal and Moisture Protection	1 LS	LS	$ _____
132.	Quartzite Flagstone Roof Ballast per Plans	93 TONS	$ _____	$ _____
	Subtotal – Items 130 - 132			**$** _____
	Doors and Windows			
133.	Door Assemblies	1 LS	LS	$ _____
134.	Custom Pivot Door Assemblies	6 EA	$ _____	$ _____
	Subtotal – Items 133 – 134			**$** _____
	Finishes			
135.	Building Finishes – Exterior	1 LS	LS	$ _____
136.	Building Finishes - Interior	1 LS	LS	$ _____
137.	Painting	1 LS	LS	$ _____
138.	High Performance Coatings	1 LS	LS	$ _____
139.	Suspended Linear Metal Panel Ceiling System	1 LS	LS	$ _____
	Subtotal – Items 135 – 139			**$** _____
140.	Specialties	1 LS	LS	$ _____
	Subtotal – Item 140			**$** _____
141.	Fire Protection	1 LS	LS	$ _____
	Subtotal – Item 141			**$** _____
142.	Plumbing	1 LS	LS	$ _____
	Subtotal – Item 142			**$** _____
143.	HVAC	1 LS	LS	$ _____
	Subtotal – Item 143			**$** _____
144.	Electrical (Amphitheater Only – Site Electrical Below)	1 LS	LS	$ _____
	Subtotal – Items 144			**$** _____
	SITE LIGHTING AND ELECTRICAL			
145.	Palm Tree Uplight	49 EA	$ _____	$ _____
146.	Parking Lot/Pole Lighting	29 EA	$ _____	$ _____
147.	Monument Sign Light	1 EA	$ _____	$ _____
148.	Lighted Bollard (Promenade)	21 EA	$ _____	$ _____
149.	Conduit, Conductor & Misc Items	1 LS	LS	$ _____
150.	New Panels and Service	1 LS	LS	$ _____
	Subtotal – Items 145 – 150			**$** _____

ITEM NO.	DESCRIPTION	QTY	UNIT PRICE	TOTAL PRICE
	PERMIT FEES			
151.	City of Rancho Mirage Permit Fees	1 LS	LS	$ 89,500
	Subtotal – Item 151			**$ 89,500**
	BID ALTERNATE			
152.	Misting System	1 LS	LS	$ _____
	Subtotal – Item 152			**$** _____

TOTAL BID WITHOUT BID ALTERNATE (Items 1-151) $_____

TOTAL BID WITHOUT BID ALTERNATES WRITTEN IN WORDS _____

_____

TOTAL BID WITH BID ALTERNATES (Items 1-152) $_____

TOTAL BID WITH BID ALTERNATES WRITTEN IN WORDS _____

_____

Note 1: The estimated quantities listed in the Proposal Bid Sheet(s) are supplied to give an indication of the general scope of work. The accuracy of the figures is not guaranteed and the bidder shall make their own estimates from the drawings. In the case of a variation between the unit price and the totals shown by the bidder, the unit price shall be considered to be the bid to determine the final pay amount.

*Note 2: Bidder's attention is directed to Instructions to Bidders, Proposal Forms (page 00100-2), wherein the Bidder is required to "**provide evidence with the submitted Bid** that the Contractor either has an asphalt plant or has obtained a written commitment from an asphalt plant to provide the necessary paving materials when needed so that the project can progress in an orderly and expedient manner."*

_____ _____

Bidder's Name Telephone Number

STANDARD AGREEMENT FOR PUBLIC WORKS CONSTRUCTION

The CITY OF RANCHO MIRAGE ("CITY") and _____ ("CONTRACTOR"), through this agreement ("Agreement"), agree as follows:

A. CONTRACTOR shall construct the following public improvements ("work") identified as:

Demolition and removal of certain existing park improvements including, but not limited to asphalt concrete pavement, PCC curbs and sidewalks, landscaping, irrigation, electrical lighting; and construction of improvements including, but not limited to site grading, asphalt concrete pavement, curbs and gutters, PCC concrete driveways and sidewalks, amphitheater and associated buildings, landscaping, electrical lighting, playground equipment, storm drains, handicapped ramps, signing and striping, as well as all other appurtenant or related work as shown or referenced on the plans.

B. CITY-approved plans and specifications for the construction of the work, which are incorporated herein by reference and prepared by:

Hermann Design Group, 77-772 Flora Road, Suite A, Palm Desert, CA 92211
(760) 777-9131.

are identified as:

CP 12-284 – Whitewater Park Expansion and Amphitheater Project.

C. The following are attached hereto and made a part hereof and/or are incorporated by reference: Schedule A, Notice Inviting Sealed Bids, Instructions to Bidders, Bid Proposal Documents, Contract Documents, all attachments and appendices, General Provisions, Special Provisions, and all referenced specifications, details, standard drawings and appendices, together with all required bonds, insurance certificates, permits, notices and affidavits; and also including any and all addenda or supplemental agreements clarifying, amending or extending the work contemplated as may be required to ensure its completion in an acceptable manner.

1. COMPENSATION: For and in consideration of the payments to be made by CITY, CONTRACTOR agrees to furnish all materials and perform all work required for the work, and to fulfill all other obligations as set forth herein.

CONTRACTOR agrees to receive and accept the prices set forth in the Bid Proposal as full compensation for furnishing all materials, performing all work, and fulfilling all obligations hereunder. Said compensation shall cover all expenses, losses, damage and consequences arising out of the nature of work during its progress or prior to its acceptance, including those for well and faithfully completing the work and the whole thereof in the manner and time specified herein; and also including those arising from actions of the elements, unforeseen difficulties or obstructions encountered in the prosecution of the work, suspension or discontinuance of the work and all other unknowns or risks of any description connected with the work.

CITY hereby promises and agrees to retain, and does hereby retain, CONTRACTOR to provide the materials, do the work, and fulfill the obligations according to the terms and conditions herein contained and referred to, for prices aforesaid, and hereby contracts to pay the same at the time, in the manner and upon the conditions set forth herein.

2. **IMPROVEMENTS:** For valuable consideration, CONTRACTOR agrees to do, or cause to be done, all of the work described herein by the date specified in Schedule A. CONTRACTOR warrants that all of the materials supplied and work to be done will be of good quality and workmanship. Said work shall be in strict conformity with the plans and specifications of the work, the standard specifications and drawings for public improvements adopted by CITY and this Agreement. CONTRACTOR shall furnish all transportation, equipment, labor, services, permits, utilities and all other items necessary to complete the work. CONTRACTOR shall pay all claims, demands and liability arising out of, or resulting from or in connection with, the performance of the work. CONTRACTOR shall furnish accurate "as constructed" plans. CONTRACTOR'S obligations herein are not limited by any cost estimates nor will any estimate be a measure of damages.

3. **TIME FOR COMPLETION:** The work shall be commenced on a date to be specified in a written Notice to Proceed from the CITY and shall be completed within two hundred seventy (270) calendar days from and after said date. It is expressly agreed that except for extensions of time duly granted in the manner and for the reasons specified in the General Provisions, time shall be of the essence.

4. **INSURANCE:** CONTRACTOR shall not commence or continue to perform any work unless CONTRACTOR has in full force and effect all insurance required hereunder with companies satisfactory to CITY. To be acceptable, insurers must be authorized to do business, and have an agent for service of process, in California, and have an "A" policyholder's rating and a financial rating of at least Class V, in accordance with the current Best's Ratings. All insurance policies shall be maintained until the work is accepted by CITY and provide for coverage of all causes of action or disputes arising out of acts in performance of the construction of the work herein, whether said causes or disputes are filed or brought to the attention of CITY before or after the termination of this contract.

   Concurrent with execution of this Agreement, CONTRACTOR shall provide certificate(s) of insurance and endorsements, satisfactory to CITY, or otherwise provide proof of insurance as approved by the City Attorney, certifying that CONTRACTOR has and will maintain for the Agreement period, full worker's compensation insurance coverage as required by State laws, for all persons who are or may be employed in carrying out the work.

   Concurrent with execution of this Agreement, CONTRACTOR shall provide to CITY certificate(s) of insurance and endorsements, satisfactory to CITY, or otherwise provide proof of insurance as approved by the City Attorney, certifying that CONTRACTOR has general liability and commercial vehicle liability insurance coverage naming CITY, City Council members, CITY'S engineer, and their consultants, officials, directors, officers, agents and employees, as additional insureds for both bodily injury and property damage of not less than that specified in Schedule A.

   General liability and commercial vehicle liability insurance coverage shall include each of the following types of insurance as required by CITY to carry out this Agreement:

   A. General Liability

   1. Comprehensive Form
   2. Premises-Operations
   3. Explosion and Collapse Hazard
   4. Underground Hazard
   5. Products/Operations Competed
   6. Contractual Insurance
   7. Broad Form Property Damage Including Completed Operations
   8. Independent Contractors
   9. Personal Injury

   B. Vehicle Liability

   1. Comprehensive Form, Including Loading and Unloading
   2. Owned
   3. Hired
   4. Nonowned

Concurrent with execution of any agreements between CONTRACTOR and any subcontractors retained by CONTRACTOR to perform any work required of CONTRACTOR hereunder, and in any event prior to CONTRACTOR authorizing any subcontractors to perform any such work or to even conduct any preliminary activities in preparation for or in anticipation of such work, CONTRACTOR shall collect certificates of insurance from all such subcontractors evidencing proof that all subcontractors have procured and will maintain all the insurance coverages required of CONTRACTOR under this Agreement.

In addition to naming the CITY, City Council members, CITY'S engineer, and their consultants, officials, directors, officers, agents and employees, as additional insureds, as set forth above, the certificates of insurance, including those provided by any subcontractor, provided either on forms required by the CITY or as otherwise approved by the City Attorney, shall bear the following endorsements: (1) each policy required herein must be endorsed to provide that the policy shall not be cancelled or non-renewed by or reduced in coverage or limits (except by paid claims) unless the insurer has provided the CITY with thirty (30) days prior written notice of cancellation; (2) the carriers of all required insurance policies must waive all rights of subrogation against the CITY and its officers, employees, servants, volunteers, agents and independent contractors; and (3) except for worker's compensation insurance, all insurance policies required to be provided by CONTRACTOR must be endorsed to provide that the policies shall apply on a primary and noncontributing basis in relation to any insurance or self-insurance, primary or excess, maintained or available to the CITY, and its officers, employees, servants, volunteers, agents and independent contractors.

Nothing contained in these insurance requirements shall limit the liability of CONTRACTOR or CONTRACTOR's sureties. Review and acceptance of insurance certificates shall not constitute any representation by CITY or its representatives that any required insurance has been issued.

5. **CONTRACTOR'S LIABILITY:** CONTRACTOR shall, at CONTRACTOR'S sole cost and expense, be solely and completely responsible for all matters affecting the design, prosecution, progress and completion of the work (both on and off the job site). CONTRACTOR shall be responsible for observing all laws. CONTRACTOR shall provide for public convenience and safety and safety of workers, including CONTRACTOR'S workers and those of CONTRACTOR'S subcontractors, suppliers and others contributing to the work. CONTRACTOR shall protect CITY property and property rights of others, including the location, maintenance and replacement of utilities, whether shown on the plans or not. CONTRACTOR shall give prior notification to utility owners. CONTRACTOR shall notify Underground Service Alert at 1-800-422-4133 at least 48 hours prior to start of construction. CONTRACTOR shall protect against, and prevent drainage from, storm runoff. CONTRACTOR shall not interfere with easements, rights-of-way and encroachment permits. Nothing in this Agreement, the specifications, or other contract documents, or CITY'S approval of the plans and specifications or inspection of the work is intended to include CITY'S review, inspection, acknowledgment of or responsibility for any such matters. CITY, CITY COUNCIL members, ENGINEER, and their consultants and each of their officials, directors, officers, employees and agents shall have no responsibility or liability for the above.

6. **CONTRACTOR'S INDEMNIFICATION:** CONTRACTOR shall indemnify and hold harmless CITY, CITY COUNCIL members, ENGINEER, and their consultants and each of their officials, directors, officers, agents and employees from and against all liability, claims, damages, losses, expenses and other costs, including costs of defense and attorneys' fees arising out of or resulting from or in connection with all matters affecting the design or construction of the work, both on and off the job site, and during and after completion. This, provided any of the above is: (1) attributable to bodily injury, sickness, disease or death, or to injury to or destruction of property (other than the work itself) including the loss of use resulting therefrom, and (2) caused in whole or in part by any act or omission of CONTRACTOR, CONTRACTOR'S engineer, any subcontractor, any supplier, anyone directly or indirectly employed by any of them or anyone for whose acts or omissions any of them may be liable. All of this regardless of whether or not it is caused in part by any act or omission (active, passive or comparative negligence included) of a party indemnified hereunder. Said indemnification and agreement to hold harmless shall extend to injuries to persons and damages to or taking of property resulting from all matters affecting the design or construction of said improvements or the diversion of waters or from all matters affecting the design or construction or maintenance of drainage systems, streets and other improvements. Acceptance of these improvements by CITY shall not constitute an assumption by CITY of any responsibility for such damage or taking. As to any and all claims against the indemnified parties by any employee of CONTRACTOR, any contractor, any subcontractor, any supplier, anyone directly or indirectly employed by any of them or anyone for whose acts any of them may be liable, the indemnity obligations hereunder shall not be limited in any way by any limitation on the amount or type of damages, compensation or benefits payable by or for the CONTRACTOR, subcontractor, supplier or other person under workers' compensation acts, disability benefit acts or other employee acts.

   CONTRACTOR shall also indemnify and hold harmless CITY, CITY COUNCIL members, ENGINEER, and their consultants, and each of their officials, directors, officers, employees and agents from and against all losses, expenses, damages (including damages to the work itself), attorneys' fees and other costs, including costs of defense, which any of them may incur both during and after completion with respect to any latent deficiency in all matters affecting the design, specifications, surveying, planning, supervision, observation or construction of the improvements referred to herein or any injury to a person or property, real or personal, as a result of any such latent portions of the work which CITY reasonably suspects may also be defective by reason of known defects in the work or other work performed by CONTRACTOR or CONTRACTOR'S subcontractors, or suppliers or designed by their representatives. Provisions of this paragraph shall remain in effect ten (10) years following acceptance of improvements by the City. Nothing contained herein shall limit CITY'S remedies pursuant to Code of Civil Procedure, Section 337.15.

7. **SECURITY:** With the execution of this Agreement, unless otherwise indicated on Schedule A, CONTRACTOR shall furnish and deliver to CITY, at no expense to CITY, a payment bond and a performance bond. Each shall be in the amount of CITY-approved estimate specified on Schedule A. Bonds shall be furnished by surety companies satisfactory to CITY on the forms provided by CITY. No alterations or substitution of said forms shall be allowed. To be acceptable, surety companies must be authorized to do business and have an agent for service of process in California, be on the accredited list of the United States Treasury Department, and have an "A" policyholder's rating and a financial rating of Class V, or better, in accordance with the current Best's Rating. The bonds shall be limited to amounts acceptable to the Treasury Department.

   None of the following shall in any way affect the obligations of any surety. Each surety waives notice thereof: (a) any change, extension of time, alteration or additions to the terms of the Agreement, or the work to be performed, or the plans and specifications therefore; (b) any

matters unknown to surety which might affect surety's risk, except that CITY shall advise surety upon request of the following: (1) any written claims it receives from unpaid subcontractors or suppliers, (2) any written orders received from other public authorities charging violations of laws, ordinances or regulations, and (3) failure of CONTRACTOR to comply with any written notice to correct defective work. The obligations of CONTRACTOR shall not be limited by the amount of such bonds.

8. **TYPES/AMOUNT OF SECURITY:** If specified in Schedule A, in lieu of payment and performance bonds, CONTRACTOR may furnish CITY either cash, a Letter of Credit, or an Agreement of Deposit as security for performance. Said security shall be in an amount not less than 100% of the cost estimate and, in addition, for payment of those furnishing materials, labor or equipment in an amount not less than 100% of the cost estimate. Said security agreements shall be on forms furnished by CITY. No alterations or substitution of said forms shall be allowed. The obligations of CONTRACTOR shall not be limited by the amount of the security required. No interest shall be paid CONTRACTOR on any cash deposit made pursuant to this paragraph.

9. **SUBSTITUTION OF SECURITIES:** In conformance with the State of California Public Contract Code, Part 5, Section 22300, CONTRACTOR may substitute securities for any monies withheld by the CITY to ensure performance under this Agreement.

At the request and expense of CONTRACTOR, CONTRACTOR has the option of establishing an escrow account with a state or federally chartered bank which shall serve as an escrow agent, for CONTRACTOR'S direct deposit of securities as a substitute for retention earnings required to be withheld by the CITY. Upon CONTRACTOR'S completion of its obligations hereunder, as evidenced by the CITY'S acceptance of the work pursuant to Section 11 hereof, the escrow agent shall return the securities to CONTRACTOR. The escrow agent shall notify the CITY within ten (10) days after deposit of the securities. The market value of the securities at the time of the substitution shall be at least equal to the cash amount then required to be withheld as retention. Securities shall be held in the name of the CITY and shall designate CONTRACTOR as the beneficial owner. Alternatively, on written request of CONTRACTOR, the CITY shall make payments of the retention earnings directly to the escrow account.

10. **PARTIAL UTILIZATION:** Until all work has been completed and accepted by CITY and all other public authorities having jurisdiction, CONTRACTOR shall be responsible for the care and maintenance of, or any damage to, the work. When the work or any portion of it is sufficiently complete to be utilized or placed into service, CITY shall have the right, upon written notification to CONTRACTOR, to utilize such portions of the work and to place the operable portions into service. With this notice and commencement of utilization or operation by CITY, CONTRACTOR shall be relieved of the duty of maintaining the portions so utilized or placed into operation. However, such use and operation shall not relieve CONTRACTOR of the full responsibility for completing the work in its entirety, for making good any defective work or materials, for protecting the work from damage, and for being responsible for damage and for the work as set forth herein. Nor shall such action by CITY be deemed completion and acceptance. Further, such action shall not relieve CONTRACTOR or CONTRACTOR'S sureties and insurers of the provisions hereof relating to indemnity and guarantees.

11. **ACCEPTANCE OF PROJECT - WARRANTY**: Acceptance of the work shall only be by action of the CITY COUNCIL. Neither the acceptance nor any prior inspections or failure to inspect shall constitute a waiver by CITY of any defects in the work. From and after acceptance, the work shall be owned and operated by CITY. As a condition to acceptance, CONTRACTOR shall certify to CITY in writing that all of the work has been performed in strict conformity with the Agreement and that all costs have been paid or supplied to CITY security, satisfactory to CITY, guaranteeing such performance. In addition to CONTRACTOR'S other obligations under the Agreement CONTRACTOR warrants all work and materials to be good quality and

fit for the purpose and intended use. CONTRACTOR shall also repair, replace and restore any other work which is displaced in correcting defective work as well as other portions of the work which CITY by reason of such defects reasonably suspects may also be defective.

In the event of a failure to commence with the compliance of above-mentioned conditions within seven (7) calendar days after being notified in writing or failure to diligently pursue such compliance to completion, CITY is hereby authorized to proceed to have the defects repaired and made good at the expense of CONTRACTOR who hereby agrees to pay the cost and charges therefor immediately on demand.

If, in the opinion of CITY, nonconforming work creates a dangerous condition or requires immediate correction or repair to prevent further loss to CITY or to prevent interruption of operations, CITY shall attempt to give the CONTRACTOR notice. If CONTRACTOR cannot be contacted or does not comply with CITY'S request for correction within a reasonable time as determined by CITY, CITY may proceed to make such correction or provide such repair. The costs of such correction or repair shall be charged against CONTRACTOR, who agrees to make payment for said costs upon demand.

Corrective action by CITY will not relieve CONTRACTOR or CONTRACTOR'S sureties or insurers of the guarantees and indemnities of this Agreement.

This paragraph does not in any way limit CITY'S remedies pursuant to Code of Civil Procedure, Section 337 and 337.15, or the guarantee on any items for which a longer guarantee is specified or on any items for which a manufacturer or supplier gives a longer guarantee period. CONTRACTOR agrees to act as a co-guarantor with such manufacturer or supplier and shall furnish CITY all appropriate guarantees or warranty certificates upon completion of the project. No manufacturer's guarantee period shall in any way limit the liability of CONTRACTOR or CONTRACTOR'S sureties and insurers under the indemnity or insurance provisions of this Agreement.

12. **CONTRACTORS AND AGENTS**: CONTRACTOR shall be as fully responsible to CITY for the acts and omissions of CONTRACTOR'S subcontractor and of the persons directly or indirectly employed by CONTRACTOR'S subcontractor as CONTRACTOR is for the acts and omissions of persons directly or indirectly employed by CONTRACTOR. Nothing contained in the Agreement shall create any contractual relationship between any subcontractor or others and CITY. CONTRACTOR shall bind every contractor to be bound by the terms of this Agreement.

13. **DEFAULT BY CONTRACTOR**: CONTRACTOR shall be in default of this Agreement if: CONTRACTOR refuses or fails to prosecute the work or any separable part thereof with such diligence as will ensure its completion within the time specified herein, or any written extension thereof, or fails to complete such work within such time, or if CONTRACTOR should be adjudged a bankrupt, make a general assignment for the benefit of creditors, or if a receiver should be appointed on account of CONTRACTOR'S insolvency, or if CONTRACTOR or any of their subcontractors violate any of the provisions of this Agreement, or if CONTRACTOR fails to make prompt payment for materials or labor, or if CONTRACTOR disregards laws, ordinances, or instructions of CITY. CITY may thereafter serve written notice upon the CONTRACTOR and CONTRACTOR'S surety of its intention to declare this Agreement in default. Said notice shall contain the reasons for such intention to declare a default. Unless, within ten (10) days after the service of such notice, such violations shall cease and satisfactory arrangements for the corrections thereof be made, this Agreement shall upon the expiration of said time be in default.

Upon such default, CITY shall serve written notice thereof upon the surety and CONTRACTOR, and the surety shall have the right to take over and perform this Agreement. If the surety does not, within fifteen (15) days after the serving upon it of a notice of a default,

give CITY written notice of its intention to take over and perform this Agreement or does not commence performance thereof within thirty (30) days from the date of CITY'S notice, CITY may take over the work and prosecute the same to the extent of completion it deems necessary by contract or by any other method it may deem advisable for the account and at the expense of CONTRACTOR, and the surety shall be liable to CITY for any cost or other damage occasioned CITY thereby. In such event CITY may, without liability for so doing, take possession of, and utilize in completing such work, such materials, appliances, plants, and other property belonging to CONTRACTOR that may be on the site of the work and be necessary therefor. Should surety fail to take over and diligently perform the Agreement upon CONTRACTOR'S default, surety agrees to promptly on demand deposit with CITY such amount as CITY may reasonably estimate as the cost of completing all of CONTRACTOR'S obligations. For any such work the CITY elects to complete by furnishing its own employees, materials, tools, and equipment, CITY shall receive reasonable compensation therefor including costs of supervision and overhead.

CITY may, at its option, elect not to complete any or all of the work and may elect not to accept any of the work already completed. If CITY elects not to accept any of the work, then all CITY'S obligations to CONTRACTOR and the lands to be served shall terminate. CITY'S obligations to CONTRACTOR and the lands to be served shall continue to the extent of any acceptance, subject to CITY'S right to offset any sums due the CITY.

The foregoing provisions are in addition to and not in limitation of any other rights or remedies available to CITY.

14. **DELAY BY CONTRACTOR**: If the work is suspended or otherwise not continuously prosecuted for any cause whatsoever, within or without the time for completion, CONTRACTOR shall, at CONTRACTOR'S sole cost and expense, remove and replace all or any portion of the work already completed and inspected which CITY, in its sole discretion, determines is or can be damaged.

15. **ATTORNEYS' FEES AND COSTS**: Should CITY engage an attorney to enforce any provision of this Agreement or to defend any claim brought by anyone arising out of the failure of CONTRACTOR to perform any of CONTRACTOR'S obligations under this Agreement, CONTRACTOR shall pay all of CITY'S attorneys' fees incurred in connection therewith, with or without suit, whether or not said attorney is in the regular employ of the CITY.

16. **DISCRIMINATION**: Labor Code Section 1735 requires that no discrimination be made in the employment of persons upon public works because of race, religious creed, color, national origin, ancestry, physical disability, medical condition, marital status, or gender of such persons, except as provided in Government Code Section 12940. Affirmative Action to ensure against discrimination in employment practice on the basis of race, color, national origin, ancestry, gender, or religion will also be required.

17. **ASSIGNMENT**: The performance of the Agreement may not be assigned except upon the written consent of CITY. Consent will not be given to any proposed assignment which would relieve CONTRACTOR or CONTRACTOR'S sureties of their responsibilities under the Agreement unless CITY finds that assignee can perform this Agreement and provide security comparable to that provided by CONTRACTOR.

18. **NOTICE**: All notices required hereunder shall be deemed served or given upon the earlier of actual receipt or deposit in the U.S. Postal Service, first class postage prepaid, addressed to CONTRACTOR at the address set forth below, to the surety at the address in the security instrument, and to CITY at 69-825 Highway 111, Rancho Mirage, California 92270.

CITY OF RANCHO MIRAGE
STANDARD AGREEMENT FOR PUBLIC WORKS CONSTRUCTION
SIGNATURE REQUIREMENTS

(Limited Partnership/General Partnership/Corporation)

1 WHERE PRINCIPAL IS A LIMITED PARTNERSHIP

A. General Partner shall execute on behalf of the limited partnership.

B. General Partner shall furnish City of Rancho Mirage a copy of the recorded Certificate of Limited Partnership to authenticate the authority of the General Partner to sign on behalf of the limited partnership.

2 WHERE PRINCIPAL IS A GENERAL PARTNERSHIP

A. General Partner shall execute on behalf of general partnership.

B. General Partner shall furnish City of Rancho Mirage a copy of the General Partnership Agreement authenticating that the General Partner who signs the document has authority to do so.

3 WHERE PRINCIPAL IS A CORPORATION

A. Officers shall execute on behalf of corporation.

B. Officers shall furnish City of Rancho Mirage a copy of a corporate resolution indicating that the officers who sign the document are the officers of the corporation and authorized to bind the corporation to contract. Corporation requires two signatures.

In each of the foregoing situations (a limited partnership, a general partnership or a corporation) the CITY requires an individual obligor in addition to the partnership or corporate entity.

For example, John Doe may sign on behalf of either partnership or the corporation as the General Partner and/or president thereof, but then, in addition, John Doe is required to sign the document individually as an individual obligor.

By_____
(Authorized Representative of CITY) Date
Richard W. Kite, Mayor

Title: Mayor

APPROVED AS TO FORM:

By: _____
City Attorney

ATTEST:

By: _____
City Clerk

(SEAL IF CORPORATION)

By_____
(Authorized Representative of Corporation) Date

Title_____

Address:_____

_____

Telephone:_____

By_____
Individual Guarantor

_____
Address

_____

_____
Telephone No.

By_____
Individual Guarantor

_____
Address

_____

_____
Telephone No.

(SIGNATURES MUST BE NOTARIZED)

(Seal: Partnership/Corporation)

SCHEDULE A

STANDARD AGREEMENT FOR PUBLIC WORKS CONSTRUCTION

This schedule is attached to and made a part of the Standard Agreement for Construction of Public Improvements between CITY and CONTRACTOR for the above-referenced property.

1. Compensation: $_____

2. Completion Date (270 calendar days): To be determined by Notice to Proceed

3. Liability Insurance Limits:

General Liability

$2,000,000	Each Occurrence (Includes Bodily Injury and Property Damage)
$1,000	Medical Expense
$1,000,000	Personal & Advertising Injury
$2,000,000	General Aggregate
$2,000,000	Products-Completed/Operations Aggregate

Automobile Liability

Combined Single Limit	$1,000,000 each accident, $2,000,000 aggregate
Workers Compensation	Statutory

4. Approved Security Amounts:
   a. Performance

   $_____

   b. Payment

   $_____

5. Bond Substitute Acceptable: Yes No (Cross out one)

6. Contractor(s):

Name and Address	License No.	Phase of Work

( ) Initial of CITY REPRESENTATIVE ( ) Initials of CONTRACTOR REPRESENTATIVE

LETTER OF CREDIT

CITY OF RANCHO MIRAGE
69-825 Highway 111
Rancho Mirage, CA 92270

Attention: Randal K. Bynder, City Manager

Reference: Irrevocable Letter of Credit No. _____

Gentlemen:

This Letter of Credit is given to fulfill the requirements of that certain agreement entered into between the City of Rancho Mirage, a political subdivision of the State of California, hereinafter referred to as "CITY," and

_____

hereinafter referred to as "Principal," covering certain improvements to be installed in that certain project known and designated as:

_____

As required by said agreement, and for that purpose only, we hereby establish in favor of CITY our Irrevocable Letter of Credit No._____ in the amount of _____ _____ U.S. dollars ($_____), to be paid by drafts at sight on us if accompanied by the following documents:

> CITY'S written statement (signed by the City Manager or City Attorney) certifying that there has been failure of the Principal to perform the above agreement. Said statement shall declare the amount of the sight draft on us and that the amount of this draft is, therefore, now due and payable.

IT IS AGREED that the above funds are on deposit and guaranteed for payment and said funds shall become trust funds for the purposes set forth herein as required by Section 66499.6 of the Government Code of the State of California.

Upon our receipt, from time to time, of a signed and dated certificate, in the form below, from the City of Rancho Mirage, the amount of this Letter of Credit will be reduced by the amount stated in such certificate. Said certificate must read as follows:

> Required improvement(s) has been performed in that certain project known and designated as _____. The amount and liability under Letter of Credit No. _____ is hereby reduced to $_____

All drafts under this Letter of Credit shall be marked:

Name of Bank_____

Address_____

_____

IRREVOCABLE LETTER OF CREDIT NO. _____

We expressly agree with you that all drafts drawn under and in compliance with the terms of this Letter of Credit shall meet with due honor upon representation. "Due honor" requires payment to CITY within three (3) banking days after presentation of demand.

This Letter of Credit shall be deemed automatically extended without amendment one year from the present and annually thereafter unless sixty (60) days prior to any such date bank shall notify City Clerk, by registered letter, that bank elects not to renew for such additional one year. In any event, this guaranteed Letter of Credit shall expire forty-five (45) days after CITY'S approval of the foregoing improvements, the recordation of the Notice of Acceptance and notification thereof to bank.

DATED: _____

Name of Bank_____

By: Authorizing Agent or Representative_____

APPROVED AS TO FORM:_____
City Attorney

Note: Letter must be submitted on bank letterhead with resolution or other documentation identifying signature as bank officer authorized to sign on behalf of bank.

PERFORMANCE BOND

We,_____, as Principal, and _____, as Surety, jointly and severally, firmly bind ourselves, our heirs, representatives, successors and assigns, as set forth herein, to the City of Rancho Mirage ("CITY") for payment of the penal sum of:_____ _____ U.S. Dollars ($_____). CITY and Principal have entered into an agreement, or are about to enter into the agreement attached hereto and incorporated by reference, for the construction of public improvements for property referenced in said agreement. Surety herein approves of the terms and conditions of said agreement and binds itself to faithfully perform the obligations of Principal therein if Principal fails to so perform. Surety acknowledges that the agreement herein referenced shall be that document as executed by CITY and Principal.

THE CONDITION OF THIS OBLIGATION IS SUCH that if the Principal shall in all things stand to and abide by, and well and truly keep and perform all of the covenants, conditions, and provisions in said agreement, and any alteration thereof made as therein provided, on Principal's part to be kept and performed at the time and in the manner therein specified, and shall indemnify and save harmless the CITY, CITY'S engineer, and their consultants, and each of their officials, directors, officers, employees and agents, as therein stipulated, then this obligation shall become null and void; otherwise, it shall be and remain in full force and effect.

Surety agrees that should it fail to take over and diligently perform the agreement upon Principal's default after notice and within the time specified in the agreement, Surety will promptly on demand deposit with CITY such amount as CITY may reasonably estimate as the cost of completing all of Principal's obligations. Surety's obligation for payment herein shall extend, notwithstanding any controversy between Principal and CITY regarding Principal's failure under the agreement should be conclusively presumed between the parties herein to relieve, as demanded, Surety's obligations herein and shall be deemed proper payment as between Principal and Surety.

Surety agrees that no change, extension of time, alteration, or addition to the terms of the agreement, or the work to be performed thereunder or the plans and specifications, or any matters unknown to Surety which may affect Surety's risk shall in any wise affect its obligation on this bond, and it does thereby waive notice thereof.

Principal and Surety agree that if the CITY is required to engage the services of an attorney in connection with the enforcement of this bond, each shall pay CITY'S reasonable attorneys' fees incurred, with or without suit, in addition to the above sum.

Executed this _____day of _____, 20___.

Seal of Corporation

By_____
Authorized Representative of Principal

Title_____

By_____
Authorized Representative of Principal

Title_____

(ATTACH ACKNOWLEDGEMENT OF AUTHORIZED REPRESENTATIVES)
Any claims under this bond may be addressed to: (check one)

Surety's agent for service
of process in California:

_____
Name

_____
Street Number

_____
City and State

_____
Telephone Number

( )_____
Surety Company

_____
Street Number

_____
City and State

_____
Telephone Number

By_____
Attorney in Fact or other Representative

(ATTACH ACKNOWLEDGEMENT OF AUTHORIZED REPRESENTATIVE)

( )_____
Company Agent

_____
Street Number

_____
City and State

_____
Telephone Number

APPROVED AS TO FORM:

_____
City Attorney

Furnish the name, address and phone number of the company agent as well as the surety company. Sureties must be authorized to do business in and have an agent for service of process in California and be on the accredited list of the United States Treasury Department (their bonds will be limited to such amounts as would be acceptable to the Treasury Department), and otherwise meet the requirements of section 7 of the agreement.

(NOTICE: No substitution or revision of this bond form shall be accepted.)

PAYMENT BOND

We,_____, as Principal, and _____, as Surety, jointly and severally, firmly bind ourselves, our heirs, representatives, successors and assigns, as set forth herein, to the CITY OF RANCHO MIRAGE ("CITY") and those for whose benefit this bond insures in the sum of _____ _____U.S. Dollars ($ _____). CITY and Principal have entered into an agreement, or are about to enter into the agreement attached hereto and incorporated by reference, for the construction of public improvements for the property referenced in said agreement. Surety herein approves of the terms and conditions of said agreement and binds itself to faithfully perform the obligations of Principal therein if Principal fails to so perform. Surety acknowledges that the agreement herein referenced shall be that document as executed by CITY and Principal. If Principal or any of Principal's contractors or subcontractors, fails to pay any of the persons named in Title 15 of the California Civil Code employed in the performance of the agreement for materials furnished or for labor thereon of any kind, or for amounts due under the Unemployment Insurance Code with respect to such work or labor, then Surety shall pay the same in an amount not exceeding the sum specified above, and also shall pay, in case suit is brought upon this bond, such reasonable attorneys' fees as shall be fixed by the court.

Surety agrees that it shall pay the amounts due the persons above named and diligently perform the agreement upon Principal's default after notice and within the time specified in the agreement. If Surety fails to perform within the times specified in the agreement, Surety shall promptly on demand deposit with CITY such amount as CITY may reasonably estimate as the cost of completing all of Principal's obligations. Surety's obligation for payment herein shall extend, notwithstanding any controversy between Principal and CITY regarding Principal's failure under the agreement. Principal and Surety agree that any payment by Surety pursuant to this paragraph should be conclusively presumed between the parties herein to relieve, as demanded, Surety's obligation herein and shall be deemed proper payment as between Principal and Surety.

This bond shall insure to the benefit of any and all of the persons named in Title 15 of California Civil Code so as to give a right of action to them or their assigns in any suit brought upon this bond.

Surety agrees that no change, extension of time, alteration, or addition to the terms of the agreement, or the work to be performed thereunder, or the plans and specifications, or any matters unknown to Surety which might affect Surety's risk, shall in any way affect its obligation on this bond, and it does hereby waive notice thereof.

Principal and Surety agree that should CITY become a party to any action on this bond, that each will also pay CITY'S reasonable attorneys' fees incurred therein in addition to the above sums.

Executed this _____ day of _____, 20___.

Seal of Corporation

By_____
Authorized Representative of Principal
Title_____

(ATTACH ACKNOWLEDGEMENT)

By_____
Authorized Representative of Principal
Title_____

Any claims under this bond may be addressed to: (check one)

Surety's agent for service
of process in California:

_____
Name

_____
Street Number

_____
City and State

_____
Telephone Number

( )_____
Surety Company

_____
Street Number

_____
City and State

_____
Telephone Number

By_____
Attorney in Fact or other Representative

(ATTACH ACKNOWLEDGEMENT OF AUTHORIZED REPRESENTATIVE)

( )_____
Company Agent

_____
Street Number

_____
City and State

_____
Telephone Number

APPROVED AS TO FORM:

_____
CITY Attorney

Furnish the name, address and phone number of the company agent as well as the surety company.

Sureties must be authorized to do business in and have an agent for service of process in California and be on the accredited list of the United States Treasury Department (their bonds will be limited to such amounts as would be acceptable to the Treasury Department), and otherwise meet the requirements of section 7 of the agreement.

(NOTICE: No substitution or revision of this bond form shall be accepted.)

CERTIFICATE OF INSURANCE AND ENDORSEMENT

(LIABILITY)

Agreement with the CITY OF RANCHO MIRAGE, 69-825 Highway 111, Rancho Mirage, California 92270, for the construction of public improvements for the above reference property.

THIS IS TO CERTIFY that the following insurance policies have been issued to the named insured and are now in force with expiration date(s) and limits as stated below:

ISSUING COMPANY AND POLICY NUMBER	EXPIRATION DATE	LIMITS OF LIABILITY In Thousands (000)	Each Occurrence
		A. GENERAL LIABILITY	
		Bodily Injury	$
		Property Damage	$
		Bodily Injury and Property Damage Combined	$
		Personal Injury	$
		B. AUTOMOBILE LIABILITY	
		Bodily Injury (Each Person)	$
		Bodily Injury (Each Occurrence)	$
		Property Damage	$
		Bodily Injury and Property Damage Combined	$
		C. EXCESS LIABILITY	
		Bodily Injury and Property Damage Combined	$

The following types of coverage are included in said policies (indicated by "X" in space):

A) GENERAL LIABILITY

Comprehensive Form	Yes___	No___
Explosion and Collapse Hazard	Yes___	No___
Underground Hazard	Yes___	No___
Products/Completed Operations Hazard.....	Yes___	No___
Contractual Insurance.....	Yes___	No___
Broad Form Property Damage Including Completed Operations.....	Yes___	No___
Independent Contractors	Yes___	No___
Personal Injury.....	Yes___	No___

B) AUTOMOBILE LIABILITY

Comprehensive	Yes___	No___
Owned	Yes___	No___
Hired.....	Yes___	No___
Non-owned	Yes___	No___

C) EXCESS LIABILITY

Umbrella Form.....	Yes___	No___
Other Than Umbrella Form	Yes___	No___

ENDORSEMENT AS TO EACH POLICY

The CITY, CITY'S engineer and their consultants, and each of their officials, directors, officers, agents, and employees are included as additionally insured under each policy specified on pages 2 and 3 of the agreement but only while acting in their capacity as such and only as respects operations of the original named insureds, their contractors and subcontractors, any supplier, anyone directly or indirectly employed by any of them, or anyone for whose acts any one of them may be liable in the performance of the above-referenced agreement. The insurance afforded the additionally insured is primary insurance and the amount provided shall not be reduced or prorated by reason of any other insurance they may have.

The insurance shall not apply if the loss or damage is ultimately determined to be the proximate result of the sole and exclusive negligence (including any connected with the preparation or approval of maps, drawings, opinions, reports, surveys, designs, or specifications) of one or more of the aforesaid additionally insured.

The contractual coverages specified on pages 2 and 3 are sufficiently broad to insure all of the matters set forth in Section 4 of said agreement other than those matters set forth in the last paragraph thereof.

The insurance company will give at least 30 days' written notice by regular mail to the CITY prior to any material change or cancellation of its policy.

_____	_____
Named Insured	Insurance Company
_____	_____
Address	Address
_____	_____
City and State	City and State
Date_____	By_____ (Company Representative)
_____	_____
Insurance Company	Insurance Company
_____	_____
Address	Address
_____	_____
City and State	City and State
By_____ (Company Representative)	By_____ (Company Representative)

(SIGNATURES MUST BE NOTARIZED)

Insurance Company Agent For Service
of Process in California:

Name	CITY
Address	Street Number
City and State	City and State
Telephone Number	Telephone Number

IF MORE THAN ONE CITY, FURNISH CERTIFICATES OF INSURANCE AND ENDORSEMENTS BY EACH CITY FOR INSURANCE COMPANY IT REPRESENTS.

NOTICE: No substitution or revision of the above certificate will be accepted. To be acceptable, insurers must be authorized to do business and have an agent for service of process in California and have an "A" policyholder's rating and a financial rating of at least Class V, in accordance with the most current Best's Ratings.

CERTIFICATE OF INSURANCE AND ENDORSEMENT
(WORKERS COMPENSATION)

Agreement with the CITY OF RANCHO MIRAGE ("CITY"), 69-825 Highway 111, Rancho Mirage, California 92270, for construction of public improvements for the above-referenced property.

THIS IS TO CERTIFY that the below-named Company has issued the workers' compensation and employer's liability policy to the named insured and it is now in force at this time with expiration date as stated below.

The Company will give at least 30 days' written notice by regular mail to the CITY prior to any material change or cancellation of the policy. The policy is so endorsed.

POLICY NUMBER	EXPIRATION DATE	LIMITS OF LIABILITY
		Statutory Limits Under the Laws of the State of California

_____	_____
Named Insured	Insurance Company
_____	_____
Address	Address
_____	_____
City and State	City and State
Date_____	By_____ (Company Representative)

(SIGNATURE MUST BE NOTARIZED)

Insurance Company Agent For Service of Process in California:

_____	_____
Name	CITY
_____	_____
Address	Street Number
_____	_____
City and State	City and State
_____	_____
Telephone Number	Telephone Number

NOTICE: No substitution or revision of the above certificate will be accepted. To be acceptable, insurers must be authorized to do business and have an agent for service of process in California.

CERTIFICATE OF COMPLETION OF STANDARD AGREEMENT
FOR PUBLIC WORKS CONSTRUCTION

To induce the CITY OF RANCHO MIRAGE ("CITY") to accept all the work under the above dated Standard Agreement for Public Works Construction between CITY and CONTRACTOR, CONTRACTOR represents and certifies to CITY as follows:

1 All the work described in said agreement has been fully and completely performed in strict conformity with the agreement; and,

2. Except for final payments due CONTRACTOR or subcontractors which are contingent upon CITY'S acceptance, all transportation, equipment, labor, service, permits, utilities, and all other items used in completing the work have been fully paid for.

CONTRACTOR:_____ _____
(Name) (Phase of Work)

_____ _____ _____
(Date) (Authorized Representative) (Title)

CONTRACTOR:_____ _____
(Name) (Phase of Work)

_____ _____ _____
(Date) (Authorized Representative) (Title)

CONTRACTOR:_____ _____
(Name) (Phase of Work)

_____ _____ _____
(Date) (Authorized Representative) (Title)

CONTRACTOR:_____ _____
(Name) (Phase of Work)

_____ _____ _____
(Date) (Authorized Representative) (Title)

CONTRACTOR:_____ _____
(Name) (Phase of Work)

_____ _____ _____
(Date) (Authorized Representative) (Title)

Recording Requested By And
When Recorded Mail to:

CITY OF RANCHO MIRAGE
69-825 Highway 111
Rancho Mirage, CA 92270
No fee

NOTICE OF ACCEPTANCE

Notice is hereby given that the following public improvements have been completed and accepted by the CITY COUNCIL of the City of Rancho Mirage on _____, 20___.

_____
(Brief description of improvements)

_____
(General location)

_____ Rancho Mirage, California,

_____
(Owner of property)

_____
(Contractor(s))

This Notice of Acceptance is executed under authority of a directive from the City Council of the City of Rancho Mirage.

I,_____, declare under the penalty of perjury that I am the _____of the City of Rancho Mirage, that I am familiar with the facts stated in the foregoing Notice of Acceptance executed for and on its behalf, and that I have read the foregoing Notice of Acceptance and know the contents thereof to be true.

DATED:_____, 20___.

(SIGNATURES MUST BE NOTARIZED)

_____

_____
Title

SECTION 00700-A

INDEX OF GENERAL PROVISIONS

ARTICLE		PAGE NO.
1.	Scope of Work	00700-1
2.	Location of Work	00700-1
3.	Time For Completion	00700-1
4.	Traffic Requirements	00700-1
5.	Correlation and Intent of Documents	00700-1
6.	Detail Drawings and Instructions	00700-1
7.	No Oral Agreements	00700-2
8.	Shop Drawings	00700-2
9.	Drawings and Specifications	00700-2
10.	Materials, Workmanship	00700-2
11.	Defective Work and Materials	00700-3
12.	Substitutions of Materials and Equipment	00700-3
13.	Contractor's Title To Materials	00700-3
14.	Licenses, Permits, Laws, and Regulations	00700-3
15.	Patents, Royalties, and Taxes	00700-3
16.	Engineering, Survey, and Site Examination	00700-3
17.	Protection of Work and Property	00700-4
18.	Accident Prevention	00700-4
19.	Emergencies	00700-4
20.	Access To The Work	00700-4
21.	Inspection of The Work	00700-4
22.	Inspector	00700-4
23.	Supervision of Contractor	00700-4
24.	Changes in The Work	00700-5
25.	Delays	00700-5
26.	Time Extensions	00700-6
27.	Owner's Right To Do Work	00700-7
28.	Owner's Right To Terminate The Contract	00700-7
29.	Contractor's Right To Terminate The Contract	00700-8
30.	Payments Withheld	00700-8
31.	Liens	00700-8
32.	Assignments	00700-8
33.	Mutual Responsibility Of Contractors	00700-8

34.	Separate Contracts	00700-8
35.	Subcontracts	00700-8
36.	Use of Work Area and Cleaning	00700-9
37.	Correction of Work After Final Payment & Guarantee 1 Year	00700-9
38.	Occupancy By The Owner	00700-10
39.	Damage To Adjacent and Existing Property	00700-10
40.	Utilities	00700-10
41.	Temporary Toilet	00700-10
42.	Climatic Conditions	00700-10
43.	Laws Concerning the Owner A Part Hereof	00700-10
44.	Wages & Hours	00700-10
45.	Brand or Trade Name Substitution or “Equals”	00700-10
46.	Notice of Completion	00700-11
47.	Equal Opportunity Clause	00700-11
48.	Progress Schedule	00700-11
49.	Pre-construction Conference	00700-11

SECTION 00700

GENERAL CONDITIONS OF THE CONTRACT

1. **SCOPE OF WORK**

The work to be done consists of furnishing all materials, equipment, tools labor and incidentals as required by the contract documents to construct the above stated project.

The general items of work to be done hereunder consist of amphitheater and related improvements, removal of existing improvements including, but not limited to, asphalt concrete pavement, aggregate base, removal of existing PCC concrete curb and gutter, PCC gutter, PCC sidewalk, handicapped ramps, monument sign and foundation, and the construction of aggregate base, asphalt paving, PCC curb and gutter, PCC gutter, sidewalk, handicapped ramp, storm drainage improvements, signing and striping, landscaping and irrigation repair, lighting, as well as all other appurtenant or related work as shown or referenced on the plans.

2. **LOCATION OF WORK**

The general location and limits of the work are: Whitewater Park (71-560 San Jacinto Drive).

3. **TIME FOR COMPLETION**

Time is of the essence, therefore, the CONTRACTOR shall prioritize and schedule the work to be completed within the time specified in the Notice to Proceed (270 calendar days) and as set forth in Paragraph C.3 of the Standard Agreement, Section 00312-16, “Time For Completion”, and shall be initiated as follows:

All long lead delivery time items shall be ordered immediately upon award of the contract. Vendor delivery date commitments shall be provided to the City of Rancho Mirage.

The Contractor shall determine the exact location of all existing utilities prior to commencing work. In the event the Contractor encounters underground utilities not shown on the plans, he/she shall verify the exact location of the utility and immediately notify the Engineer.

4. **TRAFFIC REQUIREMENTS**

Delineation shall be in accordance with the California Department of Transportation California Manual on Traffic Control Devices, Latest Edition (California MUTCD), The Contractor shall submit a detailed construction detour plan consistent for Agency review and approval for each stage of construction prior to start of construction.

5. **CORRELATION AND INTENT OF DOCUMENTS**

The Standard Specifications for Public Works Construction (Green Book), 2012 Edition, project plans, special provisions, contract change orders, and all supplementary documents are essential parts of the contract, and a requirement occurring in one is as binding as though occurring in all. They are intended to be complimentary, and to describe and provide for a complete work.

Project Plans shall govern over Standard Plans; Standard Plans and Project Plans shall govern over the Standard Specifications; the Project Special Provisions shall govern over the Project Plans, Standard Specifications, and Standard Plans.

6. **DETAIL DRAWINGS AND INSTRUCTIONS**. The Engineer will furnish to the Contractor, with reasonable promptness, such further detail explanations, instructions and Drawings as may be necessary for the proper execution of the Work. In giving such additional instructions, the Engineer shall have authority to make minor changes in the Work, not involving extra cost, and not inconsistent with the intent of the Drawings and Specifications or the purposes of the improvement. The Contractor shall conform to the intent of the Contract, Drawings and Specifications. The Contractor shall not proceed with any portion of the work unless he is in possession of Plans and information necessary to its proper execution and completion.

The execution of the work as specifically detailed or explained without a written Change Order signed by the Owner and the Engineer, shall constitute an acceptance by the Contractor of detailed Drawings or information as being in conformity with the original intent of the Contract Documents.

7. **NO ORAL AGREEMENTS**. No oral agreement or conversation with any officer, agent, or employee of the Owner, either before or after execution of the Contract, shall affect or modify any of the terms or obligations contained in any of the documents comprising said Contract.

8. **SHOP DRAWINGS**

A. The Contractor shall submit for the approval of the Engineer shop, fabrication and setting drawings required by the Specifications or that may be requested by the Engineer, and no work shall be fabricated by the Contractor, except at his own risk, until such approval has been given.

B. Drawings shall be submitted in quadruplicate accompanied by letter or transmittal which shall give a list of the numbers and dates of the drawings submitted. Drawings shall be complete in every respect and bound in sets.

C. The Drawings submitted shall be marked with the name of the project, numbered consecutively and bear the approval of the Contractor as evidence that the Drawings submitted without this approval will be returned to the Contractor for re-submission.

D. The Contractor shall submit all Drawings and schedules sufficiently in advance of construction requirements to allow ample time for checking, correcting, resubmitting and rechecking.

If the shop drawings show variations from the requirements of the Contract because of standard shop practice or other reasons, the Contractor shall make specific mention of such variations in his letter of transmittal in order that, if acceptable, suitable action may be taken for proper adjustment; otherwise, the Contractor will not be relieved of the responsibility for executing the work in accordance with the Contract even though such shop drawings have been approved.

E. If a Drawing as submitted indicates a departure from the Contract requirements which the Engineer finds to be in the interest of the Owner and to be so minor as not to involve a change in the Contract price or time for performance, he may approve the Drawings.

F. The approval of shop and setting drawings will be general and, except as provided above, shall not be construed: (1) as permitting any departure from the Contract requirements; (2) as relieving the Contractor of the responsibility of any error in details, dimensions or otherwise that may exist; (3) as approving departures from additional details or instructions previously furnished by the Engineer.

9. **DRAWINGS AND SPECIFICATIONS**. The Contractor shall keep on the work site a complete copy of the Drawings and Specifications, including all authorized Change Orders, in good condition, which shall always be available to the Owner, Engineer, and their representatives.

All Drawings, Specifications and copies thereof furnished to the Contractor are the property of the Owner and shall not be used on other work without its consent. Upon completion of this project, all copies of the Drawings and specifications shall be returned to the Engineer, as agent of the Owner.

10. **MATERIALS, WORKMANSHIP**. All materials used in the project, unless otherwise specified, shall be new, of the types and grades specified, and the Contractor shall, if requested, furnish evidence satisfactory to the Engineer that such is the case. All workmanship shall be of the best quality and all workers shall be adequately skilled in the work which they perform.

11. **DEFECTIVE WORK AND MATERIALS**. The Contractor shall promptly remove from the premises all materials condemned by the Owner, the Contractor shall promptly replace and re-execute his work in accordance with the Contract and shall perform that work without expense to the Owner and shall bear the expense of making good all work of other Contractors destroyed or damaged by such removal or replacement. If the Engineer and Owner deem it expedient to correct work injured or done not in accordance with the Contract, the difference in

value together with a fair allowance for damage shall be deducted from the sum agreed to be paid the Contractor for the performance of the Contract.

12. **SUBSTITUTIONS OF MATERIALS AND EQUIPMENT**. Materials and equipment, including specially designated makes, must be furnished as specified except when equals are approved by the Owner. Equals will not be accepted unless the Contractor requests and receives permission in writing from the Owner to make specific substitutions. Requests shall be made within sufficient time to allow the Owner to investigate the merits of the proposed substitutes, and the Contractor shall present complete details with specific explanations of the characteristics of those details, which differ, from the Specifications.

13. **CONTRACTOR'S TITLE TO MATERIALS**. No materials or supplies for the work shall be purchased by the Contractor or by any subcontractor subject to any chattel mortgage or under a conditional sale or other agreement by which an interest is retained by the seller. The Contractor warrants that he has good title to all materials and supplies for which he accepts partial payment.

14. **LICENSES, PERMITS, LAWS AND REGULATIONS**. The contractor, acting in the name of the Owner, shall obtain and pay, only where legally required, for all licenses and permits, inspections and inspection certificates, required to be obtained from or made by any authority having jurisdiction over any part of the work included in the Contract. The Contractor shall comply with all laws, ordinances and regulations applicable to the work.

15. **PATENTS, ROYALTIES AND TAXES**. The Contractor shall hold the Owner and the Engineer harmless from liability of any nature, including costs and expenses, for or on account of any patented or unpatented article, appliance, or device used in the performance of the Contract and shall defend all suits or claims for infringement of any patent right. He shall pay all applicable Federal, State and local sales taxes and all other taxes pertinent to the work involved in this Contract.

16. **ENGINEERING, SURVEY AND SITE EXAMINATION**. The Contractor shall be responsible for having ascertained pertinent local conditions such as location, accessibility and general character of the site and for having satisfied himself as to the conditions under which the work is to be performed. No claim for allowances because of his error or negligence in acquainting himself with the conditions at this site will be recognized.

The Owner will furnish surveys necessary to properly locate the improvements and establish the locations thereof, with general reference points as well, that in the Owner's judgment enable the Contractor to proceed with the work.

The Contractor shall provide competent engineering services to lay out the work and all parts thereof and to establish all grades and elevations in accordance with the Contract requirements. He shall verify the figures shown on the survey cut sheets, field stakes and the approved drawings before undertaking any construction work and shall be responsible for the accuracy of the finished work.

The Contractor shall protect and preserve established bench marks and monuments and shall make no changes in locations without the written approval of the Owner. Any bench marks or monuments which are lost or destroyed shall be replaced by a licensed land surveyor at the full expense of the Contractor subsequent to proper notification of the Owner and with his approval.

Any ties, monuments and bench marks disturbed during construction shall be reset by a Licensed Land Surveyor per City and County standards after construction and the tie notes submitted to the City on 8-1/2" x 11" heavy stock grid-lined survey record paper. The tie record shall be signed by the Licensed Surveyor and a corner record shall be filed with the County of Riverside at the Contractor's expense. The Contractor and his sureties shall be liable for, at his expense, any resurvey required due to his negligence in protecting existing ties, monuments, bench marks or any such horizontal or vertical controls.

17. **PROTECTION OF WORK AND PROPERTY**. The Contractor shall at all times safely guard the Owner's property from injury or loss in connection with this Contract. He shall at all times safely guard and protect his own work and adjacent property from damage. All passageways, guard fences, lights and other facilities required for protection by State of municipal laws and regulations and local conditions shall be provided and maintained.

Existing pavements located on or near the site shall be protected against damage, and pavements that are accidentally damaged or necessarily cut shall be replaced with the same material upon completion of the work.

18. **ACCIDENT PREVENTION**. Precaution shall be exercised at all times for the protection of persons, including employees, and property. The safety provisions of applicable laws, building and construction codes shall be observed. The Contractor shall maintain sufficient safeguards, such as railings, temporary walks, lights, etc., against the occurrence of accidents, injuries, damage or harm to any person or property and shall also be responsible for the same if such occur.

19. **EMERGENCIES.** In an emergency affecting the safety of life or of any structure or of adjoining property, the Contractor shall take all necessary and proper steps to prevent any threatened loss or injury. If practicable, the Contractor shall communicate with the Owner and shall be guided by the directions and advice of the Owner. But if the character of the emergency is such as to require action with such short limits or time or under circumstances rendering that impracticable, then the Contractor shall act independently and upon his own responsibility, subject to the direction and control of the Owner as soon as it may become practicable to obtain the same.

20. **ACCESS TO THE WORK**. The Engineer, the Owner, and their representatives shall have access at all times to the work for purposes of inspection, wherever said work is in preparation or progress, and the Contractor shall provide proper facilities for such access and inspection.

21. **INSPECTION OF THE WORK**. All material and workmanship (if not otherwise designated by the Specifications) shall be subject to inspection, examination, and test by the Engineer at any all times during manufacture and/or construction and at any and all places where such manufacture and/or construction are carried on. The Engineer shall have the right to reject defective material and workmanship or require its correction. Should the Specifications, the Engineer's instructions, any law, ordinances or public authority require any work to be specially tested or approved, the Contractor shall give the Engineer timely notice of its readiness for inspection, and if the inspection is by an authority other than the Engineer, of the date fixed for such inspection. If any work should be covered, without proper inspection and without approval or consent of the Engineer, it shall, if required by the Engineer, be uncovered for examination at the Contractor's expense.

22. **INSPECTOR**. The Owner may employ an Inspector, who will act as a direct representative of the Owner or the Engineer, and who shall provide full-time and continuous personal supervision and inspection of the work.

Such supervision and inspection shall not, in any way relieve the Contractor from responsibility for full compliance with all of the terms and conditions of the Contract, nor be construed to lessen to any degree, the Contractor's responsibility for providing efficient and capable superintendence as required herein. The Inspector is not authorized to make changes in the Drawings or Specifications, nor shall his approval of work and methods relieve the Contractor of responsibility for the correction of subsequently discovered defects.

No work of any kind shall be performed on the project site outside of the regularly established working hours without the knowledge and consent of the Inspector.

23. **SUPERVISION OF CONTRACTOR**

The CONTRACTOR shall give his personal attention constantly to the faithful prosecution of the work, and shall be present, either in person or be represented by a duly authorized and competent SUPERINTENDENT satisfactory to the ENGINEER, continually at the site of the work during progress, to receive directions or instructions from the OWNER. The SUPERINTENDENT shall be qualified to, and shall, represent the CONTRACTOR during all times when the CONTRACTOR is not present and all orders or directions issued to the SUPERINTENDENT by the OWNER shall be as binding as if given to the CONTRACTOR personally. Important directions shall be confirmed in writing to the CONTRACTOR. Other directions shall be so confirmed upon written request in each case. The CONTRACTOR shall designate the Project SUPERINTENDENT in writing to the CITY and obtain ENGINEER approval prior to the start of construction. Both the CONTRACTOR and the SUPERINTENDENT shall cooperate to provide efficient and complete supervision over all phases of the work.

24. **CHANGES IN THE WORK**. The Owner, upon agreement with the Contractor, without invalidating the Contract, may order extra work or make changes by altering, adding to, or deducting from the work, the Contract sum being adjusted accordingly. The Contractor shall not be authorized to comply with such order without previously obtaining written authority therefore from the Owner. All such work shall be executed under the

conditions of the original Contract, except that any claims for extension of time caused thereby shall be adjusted at the time of ordering such change.

The Contractor shall, when requested by the Owner, furnish an itemized breakdown of the quantities and prices used in computing the value of any change that may be ordered. If in the opinion of the Contractor any instructions, detail Drawings or notices of any description issued by the Engineer or Owner involve extra cost above the Contract price he shall immediately give the Owner written notice to that effect before proceeding with the work involved. The execution of work without prior submission of such written notice shall constitute the contractor's acceptance of the work as being within the Contract price.

The Contractor agrees that any change orders for extra work represent an accord and satisfaction between the owner and Contractor for such extra work. The Contractor's change order shall contain the entire claim of Contractor for all such extra work, including but not limited to claims for delay, disruption, and acceleration damages. Contractor waives any further claim for costs and damages except as specifically set forth in the change order.

25. **DELAYS**

25.1 **Notice of Delays** – When the CONTRACTOR foresees a delay in the prosecution of the Work and, in any event, immediately upon the occurrence of a delay, the CONTRACTOR shall notify the ENGINEER in writing of the probability of the occurrence and the estimated extent of the delay, and its cause. The CONTRACTOR agrees that no claim shall be made for delays, which are not called to the attention of the ENGINEER at the time of their occurrence.

25.2 **Avoidable Delays** – Avoidable delays in the prosecution of the Work shall include delays, which could have been avoided by the exercise of care, prudence, foresight and diligence on the part of the CONTRACTOR or its subcontractors, at any tier level, or suppliers.

25.3 **Unavoidable Delays** – Unavoidable delays in the prosecution or completion of the Work shall include delays which result from causes beyond the control of the CONTRACTOR and which could not have been avoided by the exercise of care, prudence, foresight and diligence on the part of the Contractor or his subcontractors, at any tier level, or suppliers.

Delays in completion of the Work of other Contractors employed by the CITY will be considered unavoidable delays insofar as they interfere with the CONTRACTOR's completion of the current critical activity or item of the Work.

25.4 **Abnormal Delays** – Delays caused by acts of God, fire, unusual storms, floods, tidal waves, earthquakes, strikes, labor disputes, freight embargoes, and shortages of materials shall be considered as unavoidable delays insofar as they prevent the CONTRACTOR from proceeding with at least seventy-five (75) percent of the normal labor and equipment force for at least five (5) hours per day toward completion of the current critical activity item on the favorably reviewed progress schedule.

25.5 **Material Shortages** – Upon the submission of satisfactory proof to the ENGINEER by the CONTRACTOR, a shortage of materials outside the control of the CONTRACTOR will be acceptable as grounds for granting a time extension. In order that such proof may be satisfactory and acceptable to the ENGINEER, it must be demonstrated by the CONTRACTOR that the CONTRACTOR has made every effort to obtain such materials from all known sources within reasonable reach of the proposed Work and was not due to a lack of scheduling or planning on the CONTRACTOR's part.

Only the physical shortage of material caused by unusual circumstances will be considered under these provisions as a cause for Extension of Time, and no consideration will be given to any claim that material could not be obtained at a reasonable, practical, or economical cost or price, unless it is shown to the satisfaction of the ENGINEER that such material could have been obtained only at exorbitant prices entirely out of line with current rates, taking into account the quantities involved and usual practices in obtaining such quantities. A time extension for shortage of materials will not be considered for material ordered or delivered late or whole availability is affected by virtue of the mishandling of procurement. The above provisions apply equally to equipment to be installed in the Work.

26. TIME EXTENSIONS

26.1 **Avoidable Delay** – The AGENCY may grant an Extension of Time for avoidable delays if the AGENCY deems it is in its best interest. If the AGENCY grants an Extension of Time for avoidable delays, the CONTRACTOR agrees to pay the AGENCY's actual costs, including changes for engineering, inspection and administration incurred during the extension.

26.2 **Unavoidable Delay** – If the CONTRACTOR is delayed in the performance of its work by an act of the CITY or if the CONTRACTOR is delayed in the performance of its work by an unavoidable delay, then the Contract completion date may be extended by the CITY for such time that, in the AGENCY's and ENGINEER's opinion, the CONTRACTOR's completion date will be unavoidably delayed, provided that the CONTRACTOR strictly fulfills the following:

a. The CONTRACTOR shall provide notification in accordance with Section 25.1 **Notice of Delays** and submit in writing a request for an Extension of Time to the ENGINEER stating at a minimum the probable cause of the delay and the number of days being requested. The time extension request shall be submitted along with a time impact analysis.

b. If requested by the ENGINEER, the CONTRACTOR shall promptly provide sufficient information to the ENGINEER to assess the cause or effect of the alleged delay, or to determine if other concurrent delays affected the work.

c. Weather Delays. The CONTRACTOR will be granted a non-compensable time extension for weather-caused delays.

Should the CONTRACTOR fail to fulfill any of the foregoing, which are considered conditions precedent to the right to receive a Time Extension, the CONTRACTOR waives the right to receive a time extension.

Should the CONTRACTOR fail to complete the work within the time specified in the contract, as extended in accordance with this clause if appropriate, the CONTRACTOR shall pay to the AGENCY liquidated damages as specified in the Special Provisions of these specifications.

During such extension of time, neither extra compensation for engineering, inspection and administration, nor damages for delay will be charged to the CONTRACTOR. It is understood and agreed by the CONTRACTOR and AGENCY that time extensions due to unavoidable delays will be granted only if such unavoidable delays involve controlling operations which would prevent completion of the whole Work within the specified Contract Time.

26.3 **Indirect Overhead** – The CONTRACTOR shall be reimbursed for indirect overhead expenses for periods of time when the Work is stopped due to Unavoidable Delays as defined in Section 25.3, of these General Conditions. However, no reimbursement for indirect overhead shall be made for delays as defined in Section 25.4 Abnormal Delays; Section 26.2.c. Weather Delays; or Section 25.5, Material Shortages of these General Conditions.

As a condition precedent to any reimbursement, the CONTRACTOR must fulfill all conditions as provided Section 26.2, Unavoidable Delay.

The reimbursement of indirect overhead is limited to those delay conditions defined above when the CONTRACTOR is prevented from proceeding with seventy-five (75) percent of the normal labor and equipment force for at least five (5) hours per day toward completion of the current critical activity item(s) on the current favorably reviewed progress schedule.

26.4 **Indirect Field Overhead** – For those allowable delay periods as defined in Section 25.3 of these General Conditions, the CONTRACTOR shall be reimbursed for its indirect field overhead based on:

a. Invoices for all field office equipment.
b. Actual salary for field office staff.

c. Fair rental values acceptable to the ENGINEER for construction equipment idled due to the delay.

26.5 **Home Office Overhead** – For those allowable delay periods as defined in Section 25.3, Unavoidable Delays, the CONTRACTOR shall be reimbursed for its home office overhead based on the following formula:

Contract Bid price divided by Contract Period Calendar Days x 0.03 = Daily Home Office Overhead ($/Day).

Such reimbursement shall be mutually agreed between the AGENCY and CONTRACTOR to encompass full payment for any home office overhead expenses for such periods of time for the CONTRACTOR and all subcontractors. The CONTRACTOR agrees to hold the AGENCY harmless for any indirect overhead claims from its subcontractors.

27. **OWNER'S RIGHT TO DO WORK.** Should the Contractor, at any time during the process of construction, fail or refuse to furnish enough materials and/or workers to properly prosecute the work, unless prohibited from so doing though the action of the Owner, the Engineer, or other authorized official agencies, the Owner, after giving two (2) days written notice to the Contractor may, without prejudice to any other rights he may have, proceed with and/or complete the work, and may deduct the cost thereof, together with reasonable expenses arising from such procedure, from any amounts then due or which may thereafter become due to the Contractor.

28. **OWNER'S RIGHT TO TERMINATE THE CONTRACT**. If the Contractor should be adjudged a bankruptcy, or if he should make a general assignment for the benefit of his creditors, or if a receiver should be appointed on account of his insolvency, if he should, except in cases stated in the following paragraph, persistently or repeatedly refuse or fail to supply enough properly skilled workers or proper materials, or if he should fail to make prompt payment to subcontractors or for materials or labor, persistently disregard laws, ordinances or the instruction of the Owner, or otherwise be guilty of a substantial violation of any provision of the Contract, then the Owner, upon certificate of the Engineer that sufficient cause exists to justify such action, may, without prejudice to any other right or remedy after giving the Contractor ten (10) days written notice, terminate the employment of the Contractor and take possession of the premises and of all materials, tools, and appliances thereon and finish the work by whatever he may deem expedient. In such case, the Contractor shall not be entitled to receive any further payment until the work is finished. If the unpaid balance of the contract price shall exceed the expense of finishing the work including compensation to the Engineer for his additional services, such excess shall be paid to the Contractor. If such expense shall exceed such unpaid balance, the Contractor shall pay the difference to the Owner.

29. **CONTRACTOR'S RIGHT TO TERMINATE THE CONTRACT**. If through no fault of the Contractor, or of anyone employed by him (1) the work is stopped by order of any court or governmental authority, other than the Owner, (2) the Engineer capriciously or arbitrarily fails to issue any certificate for payment within thirty (30) days after it is due, or (3) the Owner fails to pay to the Contractor, within sixty (60) days after presentation of the Engineer's certificate to the Owner, any sum certified by the Engineer, then the Contractor may upon ten (10) days written notice to the Owner and the Engineer stop work or terminate the Contract, and the Owner shall be liable to the Contractor for any loss sustained and reasonable profit.

30. **PAYMENTS WITHHELD**. The Engineer may withhold or, on account of subsequent discovered evidence, nullify the whole or a part of any certificate for payment to such extent as may be necessary to protect the Owner from loss on account of:

A. Defective work not remedied.

B. Claims filed, or reasonable evidence indicating probable filing of claims.

C. Failure of the Contractor to make payments properly to subcontractor or for material or labor.

D. A reasonable doubt that the Contract can be completed for the balance remaining unpaid.

E. Damage to another Contractor.

F. Default of the Contractor in the performance of the terms of the Contract.

31. **LIENS.** The Contractor agrees that at any time upon request of either the Owner or the Engineer, he will submit a sworn statement setting forth the work performed or material furnished by subcontractors and material suppliers, and the amount due and to become due to each, and that before the final payment called for hereunder he will, if requested, submit to the Owner or the Engineer a complete set of vouchers showing what payments have been made for materials and labor used in connection with the work.

32. **ASSIGNMENTS**. The Contractor shall not assign the whole or any part of this Contract without the written consent of the Owner and all Sureties executing bonds on behalf of the Contractor in connection with said Contract.

33. **MUTUAL RESPONSIBILITY OF CONTRACTORS.** If the Contractor or any of his subcontractors or employees cause loss or damage to any separate Contract on the work, the Contractor agrees to settle with such separate Contractor by agreement or arbitration, if he will so settle. If such separate Contractor sues the Owner, on account of any loss so sustained, the Owner shall notify the Contractor, who shall indemnify and save harmless the Owner against any expenses and judgment arising therefrom.

34. **SEPARATE CONTRACTS.** The Owner reserves the right to award other contracts in connection with the project and the work, under which may proceed simultaneously with the execution of this Contract. The Contractor shall coordinate operations with those of other Contractors. Cooperation will be required in the arrangement for the storage of materials, and in the detailed execution of the work. The Contractor, including his subcontractors, shall keep himself informed of the progress and the detail work of other Contractors and shall notify the Engineer immediately of lack of progress or defective workmanship on the part of other Contractors where such delay or such defective workmanship will interfere with his own operations. Failure of a Contractor to keep informed of the work progressing on the site and failure to give notice of lack of progress or defective workmanship by others shall be construed as acceptance by him of the status of the work as being satisfactory for proper coordination with his own work.

35. **SUBCONTRACTS.**

A. The Contractor may, without additional expense to the Owner, utilize the services of subcontractors on those parts of the work that are specified to be performed by subcontractors.

B. Nothing contained in the Specifications of Drawings shall be construed as creating any contractual relationship between any subcontractor and the Owner. The divisions or sections of the Specifications are not intended to control the Contractor in dividing the work among subcontractors or to limit the work performed by any trade.

C. The Contractor shall be as fully responsible to the Owner for the acts and omissions of subcontractors and of persons employed by them, as he is for the acts and omissions of persons directly employed by him.

D. The Contractor shall be responsible for the coordination of the trades, subcontractors and material men engaged upon his work.

E. Neither the Owner nor Engineer will undertake to settle any differences between the Contractor and his subcontractors or between subcontractors.

F. The Contractor shall cause appropriate provisions to be inserted in all subcontract relative to the work to bind subcontractors to the Contractor by the terms of the General Conditions and other Contract Documents insofar as applicable to the work of subcontractors.

G. The Owner and the Engineer reserve the right to approve all subcontractors. Such approval shall be a consideration to the awarding of the Contract and unless notification to the contrary is given to the Contractor prior to the signing of the Contract, the list of subcontractors, which is submitted with his proposal, will be deemed to be acceptable.

H. In accordance with Section 4101 of the Government Code, each bidder, in his bid, shall set forth: (1) the name and location of the place of business of each subcontractor who will perform work or labor, or render services to the Contractor in or about the construction of the work, or improvement, in an amount in excess of one half of 1% of the Contractors total bid, and (2) the portion of the work which will be done by each such subcontractor.

I. In accordance with Section 4105 of the Government Code, if the Contractor fails to specify such subcontracts, he agrees to perform that portion of the work himself.

J. In accordance with Sections 4107 and 4107.5 of the Government Code, no Contractor whose bid is accepted shall without consent of the awarding authority, either: (1) substitute any person as a subcontractor in place of the subcontractor designated in the original bid; or (2) permit any such subcontractor to be assigned or transferred, or allow it to be performed by anyone other than the original subcontractor listed in the bid; or (3) sublet or subcontract any portion of the work in excess of one half of 1% of the Contractor's total bid as to which his original bid did not designate a subcontractor.

36. **USE OF WORK AREA AND CLEANING.** The Contractor shall maintain the work area under his control in an orderly condition. He shall store his apparatus, materials, supplies and equipment in such a manner as will not interfere with the daily operations of adjacent businesses or residences during the week. The Engineer shall approve all storage and field yard areas. The Contractor shall not permit any load or stress to be placed upon any part of the permanent work or existing work that will endanger the safety or strength of said work.

37. **CORRECTION OF WORK AFTER FINAL PAYMENT AND GUARANTEE ONE YEAR.** Neither the final certificate, final payment, or any provision in the Contract Documents shall relieve the Contractor of responsibility for faulty materials or workmanship, and he shall remedy any defects due thereto and pay for any damage to other work resulting therefrom, which may appear to be discovered up to one year after recording of the Notice of Completion. The Owner shall give notice of observed defects with reasonable promptness, and the Contractor shall proceed to remedy such defects immediately upon receiving such notification. Payments due to the Engineer by the Owner for extra engineering services required in the enforcement of Contractor's guarantee after acceptance of the work shall be paid to the Owner by the Contractor or his Surety.

38. **OCCUPANCY BY THE OWNER.** The Owner has the right to occupy and to use the any and all parts of the property to the completion of the entire work, and that such use shall not operate as an acceptance of any part of the work.

39. **DAMAGE TO ADJACENT AND EXISTING PROPERTY.** The Contractor shall be responsible for any and all damage done to existing property and adjacent construction work during all construction work under this Contract, and he shall make any repairs that result from his operations to the satisfaction of the Owner.

40. **UTILITIES.** The Contractor shall furnish and pay for all water, gas, electricity and other utilities used for construction purposes, unless otherwise provided in the Special Conditions or Specifications. This includes water bills for the existing water meters (2).

41. **TEMPORARY TOILET.** The Contractor shall construct a chemical toilet or temporary toilet connected to a cesspool for the use of all persons connected with the work. Structure shall have roof and door and shall be fly-proof. At conclusion of the work, the chemical toilet or cesspool and toilet shall be removed from the premises and excavation filled an left in a thoroughly sanitary condition. Exact location must be approved by the Engineer.

42. **CLIMATIC CONDITIONS.** The Contractor shall provide and maintain heat, fuel, materials, and services necessary to protect all work and materials against injury from extreme heat, cold, dry winds, or dampness as follows:

A. At all times during the placing, setting and curing of concrete and cement work, provide sufficient heat to insure the heating of spaces involved to not less than fifty (50) degrees Fahrenheit.

B. The Engineer shall have full authority to suspend operations on work when subject to damage by climatic conditions or because of insufficient curing or drying of surfaces or materials.

43. **LAWS CONCERNING THE OWNER A PART HEREOF.** The Contract is subject to all provisions of the constitution and laws of California governing, controlling or affecting the Owner, or the property, funds, operations or powers of the Owner, and such provisions are by this reference made a part hereof and of the Contract.

44. **WAGES AND HOURS.** The Owner has determined that the minimum wages paid on this project shall not be less that those set forth in the Notice Inviting Bids. It is the responsibility of bidders to inform themselves as to local labor conditions and prospective changes or adjustments of wage rates. No increase in the Contract price shall be allowed or authorized on account of the payment of increased wage rates.

In accordance with the provisions and requirements of Section 1810-16 of the Labor Code, neither the contractor nor the subcontractor who employs, directs, or controls the work of any worker employed to execute work done under the Contract, shall require or permit such worker to labor more than eight (8) hours during any one calendar day, except in cases of extraordinary emergency, caused by fire, flood or danger to life or property. Within thirty (30) days after any worker is permitted to work over eight (8) hours in one calendar day due to such extraordinary emergency, the Contractor shall file with the Owner a verified report settling the nature of the emergency. The report shall contain the name of the worker and the hours worked by him on the particular day. Failure to file the report within the thirty (30) day period shall be prima facie evidence that no extraordinary emergency existed. The Contractor and every subcontractor shall keep an accurate record showing the name of, and actual hours worked by, each worker employed by him in connection with the work executed under the Contract. The record shall be kept open to all reasonable hours to the inspection of the Owner and the Division of Labor Law Enforcement. The contractor shall forfeit, as a penalty to the Owner, $25.00 for each worker employed in the execution of the Contract by the contractor or by any subcontractor for each calendar day during which any worker is required or permitted to labor more than eight (8) hours, in violation thereof.

45. **BRAND OR TRADE NAME, SUBSTITUTION OF "EQUALS".** The provisions of this paragraph control over the provisions of paragraph 12 of these General Conditions.

Whenever any material, product, thing or services is specified by brand or trade name, the specified name shall be deemed to be followed by the words "or equal" (except where the product is designated to match others in use on a particular public improvement; either completed or in the course of completion).

As a part of his Bid Proposal any bidder must include a request for a substitution of an item "equal" to any so specified by brand or trade name. Within twenty-one (21) calendar days after award of the Contract, the Contractor may submit to the Engineer data substantiating such a request made in his Bid Proposal; otherwise the request shall be deemed to have been withdrawn. Such submission shall include data showing the equality, his reasons for making the request, and the difference, if any, in cost to the Contractor. The Engineer shall promptly investigate the request and make a recommendation to the Owner, who shall promptly determine whether or not the substitute is equal in every respect to the items specified, shall grant or deny the request accordingly, and shall notify the Engineer, who shall inform the Contractor in writing. Unless the request is granted by the governing board of the Owner, the substitution shall not be permitted. Nothing herein shall authorize any change in the Contract price nor prevent the use of Change Orders in the manner authorized by law for the project.

46. **NOTICE OF COMPLETION.** Within ten (10) days after the completion of construction in accordance with the Contract, the Contractor shall promptly notify the Engineer when construction is complete to enable the Engineer to make his final inspection, prepare a report and inform the Owner. Upon review and acceptance of the Engineer's report, the Owner shall cause a Notice of Completion to be recorded in the office of the County Recorder. Any significant deficiencies or requests for missing or incompleted portions of the work or submittals found within the report may be cause to withhold filing a Notice of Completion to allow the CONTRACTOR time to provide correction or remedy.

47. **EQUAL OPPORTUNITY.** The Contractor herein agrees not to discriminate in its recruiting , hiring, promotion, demotion or termination practices on the basis of race, religious creed, national origin, ancestry, sex, age, sexual preference or physical handicap in the performance of this Contract and to comply with the provisions of the State Fair Employment Practices as set forth in Part 4.5 of Division 2 of the California Labor Code.

48. **PROGRESS SCHEDULE**

The Contractor shall furnish three (3) copies of Job Progress Schedule to the Owner at the start of the construction and shall provide updates regularly as necessary, or as stipulated and requested by the Owner or his representative.

49. PRECONSTRUCTION CONFERENCE

The OWNER shall call a preconstruction conference after the award of the Construction Contract. A principal of the CONTRACTOR shall attend such a conference. At the conference, CONTRACTOR shall submit the name of the proposed Project SUPERINTENDENT for the project, along with a description of documented experience and references to verify the competency of the same. The CONTRACTOR shall also submit the names of each person authorized to execute Change Orders for and on behalf of the CONTRACTOR, a critical path construction schedule**,** showing the method by which CONTRACTOR proposed to accomplish the work and proposed completion dates of different aspects of the work, and what arrangements the CONTRACTOR wishes as to storage of on-site materials or equipment for the project.

At the preconstruction conference, CONTRACTOR will be asked whether he is aware of any ambiguity in the Contract Documents requiring clarification and whether the methods of accomplishment of the work provided for in the specifications are appropriate.

CONTRACTOR shall at the preconstruction conference report in detail as to what steps have been taken to provide the requisite personnel to accomplish the work, whether listed subcontractors have entered into subcontracts with him and what arrangements have been made for providing necessary equipment and material for the accomplishment of the work.

At the preconstruction conference, the CONTRACTOR shall submit to the ENGINEER a Schedule of Values of the various portions of the work, including quantities if required by the ENGINEER aggregating the total Contract Sum, divided so as to facilitate payment, prepared in such form as specified or as the ENGINEER and CONTRACTOR may agree upon, and supported by such data to substantiate its correctness as the ENGINEER may require. Each item in the Schedule of Values shall include its proper share of overhead and profit. This schedule, when approved by the ENGINEER, shall be used as a basis for CONTRACTOR 's Applications for Payment.

The Contractor shall also provide the following submittals at or prior to the preconstruction meeting:

1. A Storm Water Pollution Prevention Plan (SWPPP).
2. Vendor submittals and confirmation showing proof of ordering with delivery dates for all long lead items.
3. A traffic control, phasing and staging plan. (The traffic control plan shall include designated paths of travel for the disabled in compliance with the requirements of Title 24 and the Americans with Disabilities Act [ADA] through or around the project work area.)
4. Copies of permits.
5. Any requests for variances or substitutions.

END OF SECTION

SPECIAL PROVISIONS

PART 1 - GENERAL PROVISIONS

The Standard Specifications of the City are contained in the Standard Specifications for Public Works Construction ("Green Book"), 2012 Edition as written and promulgated by the Joint Cooperative Committee of the Southern California Chapter of the American Public Works Association and the Southern California District of the Associated General Contractors of California. Copies of these Standard Specifications are available from the publisher:

Building News, Incorporated
990 Park Center Drive, Suite E
Vista, CA 92081
(760) 734-1113

The Standard Specifications set forth above will control the general provisions, construction materials and construction methods for this contract except as amended by the Plans, Special Provisions, or other contract documents.

The Section Numbers of the following Special Provisions coincide with those of the Standard Specifications for Public Works Construction ("Green Book"), 2012 Edition. Only those sections requiring amendment or elaboration, or specifying options, are called out.

The Standard Specifications shall prevail in all cases except where a Contract Document of a higher order, provides a different requirement on a given topic or topic aspect. All language in the Standard Specifications that is not in conflict with the language in the prevailing contract Documents on a given topic or topic aspect shall remain in full force and effect, unless the language in the prevailing Contract Document specifically cites the section number in the Standard Specification and states that said provision is in lieu of that Standard Specification section.

References in the Special Provisions to "CALTRANS Standard Specifications" shall mean the Standard Specifications (2009 Edition or any updates thereof) of the State of California, Department of Transportation. Copies of these specifications may be obtained from the internet at dot.ca.gov/hq/esc/techpubs/ , or:

State of California – Department of Transportation
1820 Alhambra Blvd.
MS 9/101
Sacramento, California 95816-8041
(916) 227-4132

References in the Special Provisions to Standard Plans shall mean the most recent Standard Plans of the City of Rancho Mirage and where applicable, the Riverside County and the State Department of Transportation, 2006 edition, or any updates thereof. Applicable Standard Plans for this project are contained in the Appendix of the Specifications.

Where the Plans or Specifications describe portions of the work in general terms, but not in complete detail, it is understood that the item is to be furnished and installed complete and in place and that only the best general practice is to prevail and that only materials and workmanship of the first quality are to be used. Unless otherwise specified, the Contractor shall furnish all labor, materials, tools equipment and incidentals, and do all the work involved in executing the contract.

SECTION 1 - TERMS, DEFINITIONS, ABBREVIATIONS AND SYMBOLS

1-2 DEFINITIONS

Agency/City/Owner	- City of Rancho Mirage/Hermann Design Group (Owner's Representative)
Board/Council	- Rancho Mirage City Council
Caltrans	- California Department of Transportation
County	- County of Riverside
CVWD	- Coachella Valley Water District
Federal	- United States of America
State	- State of California
Engineer	- City Engineer or Designated Representative
Laboratory	-The designated laboratory authorized by the City of Rancho Mirage to test materials and work involved in the contract.
Standard Specifications	- Standard Specifications for Public Works Construction (Green Book)

SECTION 2 - SCOPE AND CONTROL OF THE WORK

2-1 AWARD AND EXECUTION OF THE CONTRACT.

[Replace with the following]:

Within ten (10) working days after the date of the Notice of Award, the CONTRACTOR shall execute and return the following contract documents to the AGENCY:

Contract Documents
Faithful Performance Bond
Payment Bond
Public Liability and Property Damage Insurance Certificate
Worker's Compensation Insurance Certificate
Proposed Construction Schedule
Source and submittals of all contract materials, including proof of availability

Failure to comply with the above will result in annulment of the award and forfeiture of the Proposal Guarantee. The Contract Agreement shall not be considered binding upon the agency until executed by the authorized AGENCY officials.

A corporation to which an award is made may be required, before the Contract Agreement is executed by the AGENCY, to furnish evidence of its corporate existence, of its right to enter into contracts in the State of California, and that the officers signing the contract and bonds for the corporation have the authority to do so.

2-3 SUBCONTRACTS

The Bidder's attention is directed to the provision in Section 2-3 of the Standard Specifications for the Requirements and Conditions that he must observe in the preparation of the proposal form and the submission of the bid.

REQUIRED LISTING OF PROPOSED CONTRACTORS--In accordance with the subletting and Subcontracting Fair Practices Act, commencing with Section 4100 of the Public Contract Code:

The bidder's attention is directed to other provisions of said Act related to penalties for failure to observe the provisions by using unauthorized Subcontractors or by making unauthorized substitutions.

A sheet for listing Subcontractors, as required, is included in the Bid Proposal.

2-4 CONTRACT BONDS

Both the Faithful Performance Bond and the Payment Bond shall each be for not less than one-hundred percent (100%) of the total contract amount. The Payment Bond shall remain in force until thirty-five (35) days after the date of recordation of the Notice of Completion. The Faithful Performance date shall remain in force until one year after said date.

2-5 PLANS AND SPECIFICATIONS

2-5.1 General [Replace the first paragraph with the following]:

The CONTRACTOR shall maintain a control set of plans and specifications on the project site at all times. All final locations determined in the field, and any deviations from the plans and specifications, shall be marked in red on this control set to show the record conditions. Upon completion of all work, the CONTRACTOR shall return the control set to the Engineer. Final payment shall not be made until this requirement is met.

2-5.3.3 Submittals. [Replace the last two sentences of the first paragraph with the following]:

One (1) original of each product or construction document submittal shall be transmitted to the Engineer, along with a sequentially numbered Submittal Response Form (see Appendix). One (1) photocopy of the submittal shall be returned to the Contractor with the Submittal Response Form appropriately marked.

2-5.3.3 Submittals. [Add the following]:

Except as otherwise specified herein, the Contractor shall furnish for approval, within fifteen (15) working days following award of the Contract, all submittals as required on the Plans or in the Specifications. This provision shall not authorize any extension of time for performance of the Contract. The Engineer will check and approve such submittals, within ten (10) working days from receipt of same, only for conformance with design concept of work and for compliance with information and regulatory documents given in Contract Documents. Work shall be in accordance with approved submittals.

Unless specified otherwise, sampling, preparation of samples, and tests shall be in accordance with the latest standards of the American Society for Testing and Materials.

Samples of materials and/or articles shall, upon demand, be submitted for tests or examinations and consideration before incorporation of same in work started. The Contractor shall be solely responsible for delays due to submittals not being submitted in time to allow for proper time to make tests. Acceptance or rejection will be expressed in writing. The Engineer shall have sole discretion as to the acceptance or rejection of submittals. Rejection of submittals and any demand for re-submittal for review and approval by the Engineer shall not entitle the Contractor to additional time or costs caused by the rejection.

Materials furnished must be equal to approved samples in every respect. Samples which are of value after testing will remain the property of the Contractor.

2-8 RIGHT OF WAY [Add the following]:

The Agency reserves the right to prohibit the contractor to work on property where right of way or right of entry has not been obtained prior to issuing the notice to proceed.

2-9 SURVEYING

2-9.1 Permanent Survey Markers. [Add the following]:

The contractor shall be responsible for protecting all existing horizontal and vertical survey controls, monuments, ties and bench marks located within the limits of the project. If any of the above requires removal, relocation, re-establishment or resetting, the Contractor shall, prior to any construction work and under the supervision of a California-licensed land Surveyor or Civil Engineer, establish sufficient temporary ties and temporary bench marks to enable the points to be reset after completion of construction. Monuments shall be reset per County Standard 1405.

The only exception to this requirement is that spike and washer centerline monuments shall be reset by the City's survey crew. The Contractor is required to notify the City prior to disturbing said spike and washer monuments so that they can be adequately tied down.

Any ties, monuments and bench marks disturbed during construction shall be reset by a Licensed Land Surveyor per City or County standards after construction and the tie notes submitted to the City on 8-1/2" x 11" heavy stock grid-lined survey record paper. The tie record shall be signed by the Licensed Surveyor. The Contractor and his sureties shall be liable for, at his expense, any resurvey required due to his negligence in protecting existing ties, monuments, bench marks or any such horizontal or vertical controls.

Full compensation for conforming to these requirements shall be considered as included in the various contract items and no separate payment will be allowed therefore.

2-9.2 Surveying Service. [Replace the first two paragraphs with the following]:

The Agency will provide surveying and construction staking required for the construction of this project, consistent with industry standards and as determined by the Engineer.

The cost of any additional surveying and/or construction staking primarily for the convenience of the Contractor, not in conformance with usual and customary practices, and for replacement of stakes lost as a result of the Contractor's operations will be the responsibility of the Contractor. The cost of said additional surveying shall be deducted from the Contractor's progress payments. The Contractor shall make all requests for construction stakes in writing at least 48 hours in advance of the day required. The Contractor shall dig all holes necessary for line and grade stakes, or to determine locations of any utility or structure.

The Contractor shall establish his own finish elevation control from the offset construction staking provided. Payment for setting additional control shall be considered as included in the price bid for the applicable items of work.

If construction staking is provided and subsequently removed, destroyed or impacted, whether accidentally or otherwise, or the contractor desires additional staking from the above sets, the Contractor will be charged for replacement staking and survey control at a fee of $250.00 per hour (4 hour minimum).

SECTION 3 - CHANGES IN WORK

3-3.1 General [Add the following]:

(a) No Contractor claims for extra work shall be accepted or approved by the Agency that are submitted more than 10 days after the work was performed unless the work has been authorized in writing by the Engineer.

3-3.2.3 Markup [Replace with the following]:

(a) **Work by Contractor**. The following percentages shall be added to the Contractor's costs and shall constitute the markup for all overhead and profit.

1)	Labor	15%
2)	Materials	10%
3)	Equipment Rental	10%
4)	Other Items and Expenditures	5%

To the sum of the costs and markups provided for in this subsection, 1 percent shall be added as compensation for bonding.

(b) **Work by Subcontractor.** When a Subcontractor performs all or any part of the extra work, the markup established in 3-3.2.3(a) shall be applied to the Subcontractor's actual cost of such work. **The Contractor may add a markup of 5 percent of the subcontracted portion of the extra work**.

SECTION 5 - UTILITIES

5-1 LOCATION [Add the following paragraphs]:

The CONTRACTOR shall notify the utilities at least 48 hours in advance of excavating around any of their structures.

The existence and locations of utilities shown on the drawings have been determined by a search of the available records as provided by the respective utility owner. The exact locations have not been determined by potholing unless so indicated on the drawings. The Contractor shall determine the exact location of all existing utilities prior to commencing work. He/She agrees to be fully responsible for any and all damages which may be occasioned by his failure to exactly locate and preserve any and all underground utilities, whether shown on the plans or not. In the event the Contractor encounters underground utilities not shown on the plans, he/she shall verify the exact location of the utility and immediately notify the Engineer, regardless of whether the unknown utility conflicts with the proposed construction or not. In the event of such a previously unknown conflict, the Contractor shall immediately notify the Engineer as to the extent, if any, of delays or additional costs resulting from said conflict.

The Contractor shall perform work and provide necessary materials to disconnect or relocate existing utilities as indicated. The Contractor shall document on record drawings all existing utility termination points before disconnecting.

The Contractor shall protect in place all existing power poles and overhead lines in the work area.

Where underground main distribution conduits such as water, gas, sewer, electric power, telephone, or cable television are shown on the Plans, the Contractor shall assume that every property parcel will be served by a service connection for each type of utility.

When uncharted or incorrectly charted underground piping or other utilities and services are encountered during site work operations, notify the applicable utility company immediately to obtain procedure directions. Cooperate with the applicable utility company in maintaining active services in operation.

The Contractor is advised of the existence of the utility notification service provided by UNDERGROUND SERVICE ALERT (USA). USA member utilities will provide the Contractor with the precise locations of their substructures in the construction area when the Contractor gives at least 48 hours notice to the Underground Service Alert by calling 1-800-227-2600. Contractor shall provide the AGENCY with proof of contact with USA upon request.

1. The Gas Company
   Local Telephone (760) 323-1851
   USA Member Utility, Phone 1-800-422-4133
   Protection of existing facilities by Contractor.

2. Southern California Edison Company
   Local Telephone (760) 202-4227/4254 and (760) 202-4290
   USA Member Utility, Phone 1-800-422-4133
   Protection of existing facilities by Contractor.

3. Verizon –Telephone
   Local Telephone (760) 323-1231
   USA Member Utility, 1-800-422-4133
   Protection of existing facilities by Contractor.

4. Coachella Valley Water District (Water, Sewer and Flood Control)
   Local Telephone (760) 398-2651
   USA Member Utility, Phone 1-800-422-4133
   Protection of existing facilities by Contractor.

5. Time Warner Cablevision
   Local Telephone (760) 340-2225 and (760) 340-1312
   Protection of existing facilities by Contractor.

6. City of Rancho Mirage, Public Works Department
   Local Telephone (760)770-3224
   Protection of existing facilities by Contractor.

The California Public Utilities Commission mandates that, in the interest of public safety, main line gas valves be maintained in a manner to be readily accessible and in good operating condition. The Contractor shall notify *The Gas Company's Headquarters Planning Office* at least two (2) working days prior to the start of construction. Contractor shall submit verification of contact to Engineer within 24-hours of contact.

The Contractor shall exercise extreme care to protect all existing utilities in place whether shown on the plans or not, and shall assume full responsibility for all damage resulting from his operations. The Contractor shall coordinate with each utility company as to the requirements and methods for the duration of protection, and shall be responsible for preparation and processing of any required plans or permits. The Contractor shall assume full responsibility to maintain uninterrupted service for all utilities.

By submitting a bid, the Contractor acknowledges the above referenced utility work to be completed in conjunction with this project. The Contractor shall schedule his work and conduct his operations so as to permit access and time for the required utility work to be accomplished during the progress of the work.

The Contractor shall coordinate with each utility company as to the extent of required work and the time required to do so. The Contractor shall include this time in his/her schedule. Payment for the above, if any, shall be deemed as included in the items of work, and no additional compensation as will be allowed.

5-4 RELOCATION. [Delete the Second and Fourth Paragraphs and add the following paragraph]:

Except as otherwise directed or called out on the approved plans, the alteration or temporary relocation of all service connections (including but not limited to: water, irrigation water, sewer, natural or manufactured gas, underground and/or overhead telephone and electrical) to any adjacent property or landscaped medians shall be the responsibility of the Contractor. The Contractor shall restore the service connections immediately after any disruption in service. No attempt has been made to show all service connections on the Plans. The Contractor shall make all arrangements with the utility owners regarding such work. The costs for such work on service connections, except when specified in the detailed specifications that the utility owners will make no charges for the work, shall be absorbed in the unit prices or included in the lump sum amounts bid for the various other contract items.

SECTION 6 - PROSECUTION, PROGRESS AND ACCEPTANCE OF WORK

6-1 CONSTRUCTION SCHEDULE AND COMMENCEMENT OF WORK

[Replace with the following]:

The CONTRACTOR'S proposed construction schedule shall be submitted to the Engineer within ten (10) working days after the date of the Notice of Award of Contract. The schedule shall be supported by written statements from each supplier of materials or equipment indicating that all orders have been placed and acknowledged, and setting forth the dates that each item will be delivered.

Prior to issuing the Notice to Proceed, the Engineer will schedule a preconstruction meeting with the CONTRACTOR to review the proposed construction schedule and delivery dates, arrange the utility coordination, discuss construction methods, and clarify inspection procedures.

The CONTRACTOR shall submit periodic progress reports to the Engineer by the tenth day of each month. The report shall include an updated construction schedule. Any deviations from the original schedule shall be explained. Progress payments will be withheld pending receipt of any outstanding reports.

6-7 TIME OF COMPLETION

6-7.1 General [Add the following]:

The time for completion shall be 270 calendar days as set forth in Paragraph C.3 of the Standard Agreement, Section 00312-2 “Time For Completion”, and Paragraph 3, Section 00700-1, “Time For Completion”, of the General Conditions.

6-7.2 Working Day [Add the following]:

The CONTRACTOR'S activities shall be confined to the hours between 7:00 A.M. and 4:00 P.M., Monday through Friday, excluding holidays. Deviation from these hours will not be permitted without the prior consent of the Engineer, except in emergencies involving immediate hazard to persons or property.

In the event of either a requested or emergency deviation where additional time, days or inspectors are deemed necessary, inspection service charges will be charged against the CONTRACTOR. The service charges will be calculated at overtime rates including benefits, overhead, and travel time. The service charges will be deducted from any amounts due the CONTRACTOR.

6-9 LIQUIDATED DAMAGES
[Replace last sentence of the first paragraph and the entire second paragraph with the following]:

For each consecutive calendar day in excess of the time specified, as adjusted in accordance with Subsection 6-6, for completion of the work the CONTRACTOR shall pay to the AGENCY, or have withheld from monies due it, the sum of $2500.00.

Execution of the Contract shall constitute agreement by the Agency and Contractor that $2500 per day is the minimum value of the costs and actual damage caused by the failure of the Contractor to complete the Work within the allotted time. Such sum is liquidated damages and shall not be construed as a penalty, and may be deducted from payments due the Contractor if such delay occurs.

SECTION 7 - RESPONSIBILITIES OF THE CONTRACTOR

7-1 CONTRACTOR'S EQUIPMENT AND FACILITIES [Add the following]:

A noise level limit of 86 dba at a distance of fifty feet (50') shall apply to all construction equipment on or related to the job whether owned by the CONTRACTOR or not. The use of excessively loud warning signals shall be avoided except in those cases required for the protection of personnel.

7-2 LABOR

7-2.1 Laws [Add the following]:

The CONTRACTOR, and all subcontractors, suppliers and vendors, shall comply with all AGENCY, State, and Federal orders to ensure equal employment opportunities and fair employment practices.

7-3 LIABILITY INSURANCE
[Replace the entire Subsection with the following]:

7-3.1 Indemnification

The CONTRACTOR shall indemnify and save harmless the City of Rancho Mirage, the City of Palm Desert, Coachella Valley Association of Governments (CVAG) and its member agencies, the State of California, the County of Riverside, and/or any incorporated city for all claims or suits for damages arising from his/her prosecution of the contract work, as more fully described in Subsection 7-3.2 "Contractor's Liability."

The CONTRACTOR shall maintain during the life of the contract a protective liability policy. The policy shall provide for not less than the following amounts;

General Liability	
$2,000,000	Each Occurrence (Includes Bodily Injury and Property Damage)
$1,000	Medical Expense
$1,000,000	Personal & Advertising Injury
$2,000,000	General Aggregate
$2,000,000	Products-Completed/Operations Aggregate
Automobile Liability	
Combined Single Limit	$1,000,000 each accident, $2,000,000 aggregate
Workers Compensation	Statutory

All liability insurance policies shall bear an endorsement or shall have attached a rider whereby it is provided that, in the event of expiration or proposed cancellation of such policies for any reason whatsoever, the AGENCY shall be notified by registered mail, return receipt requested, giving a sufficient time before the date thereof to comply with any applicable law or statue, but in no event less than 30 days before expiration or cancellation is effective.

The following statement shall be included on the insurance certificate:

"Additional Insured: The insurer agrees that the AGENCY, its City Council, and/or all City Council appointed groups, committees, boards and other City Council appointed body, and/or elective and appointive officers, agents, servants or employees of the CITY when acting as such are additional insured hereunder, for the acts of the insured, and such insurance shall be primary to any insurance of the CITY."

The CONTRACTOR agrees to protect, defend and indemnify the City of Rancho Mirage against loss, damage or expense by reason of any suit, claim, demand, judgments and causes of action caused by the CONTRACTOR, his/her employees, agents or any subcontractor or by any third party arising out of or in consequence of the performance of all or any operations covered by the Certificate of Insurance. The CONTRACTOR, at his/her option, may include such coverage under his/her Public Liability coverage.

7-3.2 Contractor's Liability

The City of Rancho Mirage, its City Council, or its Consultants, shall not be answerable or accountable in any manner for any loss or damage that may happen to the work or any part thereof; or for any of the materials or other things used or employed in performing the work; or for injury to any person or persons, either workmen or the public; or for damage to adjoining property from any cause which might have been prevented by the CONTRACTOR or his/her workmen or any one employed by him, against all of which injuries or damages to persons and property the CONTRACTOR, having control over such work, must properly guard. The CONTRACTOR shall be responsible for any damage to any person or property resulting from defects or obstructions or any time before its completion and final acceptance, and shall indemnify and save harmless the City of Rancho Mirage, its City Council, and the Engineer from all suits or actions of every name and description brought for, or on account of, any injuries or damages received or sustained by any person or persons, by the CONTRACTOR, his/her servants or agents, in the construction of the work or by or in consequence of any negligence in guarding the same, in improper materials used in its construction, or by or on account of any act or omission of the CONTRACTOR or has agents, and so much of the money due the CONTRACTOR under and by virtue of the contract as shall be considered necessary by the AGENCY may be retained by the AGENCY until disposition has been made of such suits or claims for damages aforesaid.

If, in the opinion of the Engineer, the precautions taken by the CONTRACTOR are not safe or adequate at any time during the life of the contract, he may order the CONTRACTOR to take further precautions, and if the CONTRACTOR shall fail to do so, the Engineer may order the work done by others and charge the CONTRACTOR for the cost thereof, such cost to be deducted from any money due or becoming due the CONTRACTOR. Failure of the Engineer to order such additional precautions, however, shall not relieve the CONTRACTOR from his/her full responsibility for public safety.

7-5 PERMITS [Replace the first sentence with the following]:

Prior to the start of any work, the Contractor shall take out the applicable Agency permits and make arrangements for Agency inspections. Requests for inspections shall be made to the City of Rancho Mirage Public Works Department, as lead Agency. The Contractor and all subcontractors shall each obtain and coordinate any and all other state permits, city business licenses, state inspections, CVWD inspections certificates, or authorizations required by any governing body or public utility. Payment for this work shall be included in the bid items of work and no additional compensation will be allowed. The City of Rancho Mirage permit fees will be $89,500, which will be listed as a bid item. The permits will be issued to the contractor prior to start of work.

7-8 PROJECT SITE MAINTENANCE [Add the following]:

7-8.1 Cleanup and Dust Control.

The Contractor shall read and abide by the requirements set out in the Local Air Quality Management Plan attached to the Plans. In particular this has provisions for: control of the site construction dust through daily watering of all disturbed areas and/or treatment of said areas with an approved "Dust Palliative" as described under Section 7-9, "Protection and Restoration of Existing Improvements", any requirements for all hauled materials to be appropriately covered with tarps; and a provision for street sweeping to remove sand and dust from traffic zones. Any sandblasting must be done by the "wet" method, and all residues must be cleaned up by street sweepers as soon as possible. Any substance other than water to be used for dust control for this project must be pre-approved by both the Engineer and the Regional Water Quality Control Board.

Costs for maintaining dust control measures, including hydromulch, fiber and other palliatives during construction and obtaining and applying construction water for dust control shall be paid for in the listed Bid Item "Compliance with SWPPP and LAQMP".

7-8.1.1 Demolition and Construction Material Recycling.

Contractor shall recycle demolition and construction materials from the job site. For example, asphalt, concrete, metals, glass, and greenwaste are all recyclable materials. Contractor shall provide the City with verification, including name and address, of the company hauling the recyclable materials. Weight tickets shall be submitted to the City from the facility receiving the materials.

Payment for demolition and construction material recycling shall be included in the compensation paid for the various items of work and no additional compensation will be allowed.

7-8.6 Water Pollution Control [Add the following]:

The CONTRACTOR shall be responsible for complying with all requirements of the latest requirements of the Regional Water Quality Control Board, the Riverside County Drainage Area Management Plan (DAMP), the City of Rancho Mirage Local Implementation Plan (LIP), and the project specific requirements of the City Engineer. The most stringent current requirements shall be in effect.

The Contractor is hereby notified that specific construction practices detailed in the SWPPP are considered to be the Best Management Practices, and are in some cases subject to amendments and updates from regulatory agencies and ordinances. Applicable construction practices in the Standard Specifications and other current relevant sources shall be incorporated into the SWPPP. Additionally, at a minimum, the Contractor's work will be in compliance with the County of Riverside DAMP, the City of Rancho Mirage LIP and the Regional Water Quality Control Board Permit for Linear Projects.

At the time of the preconstruction meeting the CONTRACTOR must have the SWPPP completed and signed by the responsible parties, and it shall be reviewed and accepted by the City prior to submittal to the Regional Board and the start of any work. The CONTRACTOR shall name himself as the "responsible party" in the permit.

The CONTRACTOR shall be responsible for conducting all required monitoring inspections and shall file original copies of the inspections and all other reports, certifications or records as required by the SWPPP with the City. All fines levied as a result of the CONTRACTOR's failure to comply with the requirements of the SWPPP, shall be the CONTRACTOR's responsibility.

Time extensions will not be allowed for any suspension of work as a result of the CONTRACTOR's noncompliance with the SWPPP.

Payment for preparing and gaining approval of the SWPPP, complying with the SWPPP, and implementation of the SWPPP, shall be deemed to be included in the bid item for SWPPP and Best Management Practices, and no additional compensation shall be allowed.

7-8.7 Drainage Control [Add the following]:

Flow, Acceptance and Removal of Water

It is anticipated that storm, surface or other waters will be encountered at various times during the work herein contemplated. The Contractor, by submitting a bid acknowledges that he/she has investigated the risk arising from such waters and has prepared his/her bid accordingly, and Contractor submitting a bid, assumes all said risk.

The Contractor shall conduct his/her operations in such a manner that storm or other existing waters may proceed uninterrupted along their existing street or drainage courses. Diversions of water for short reaches to protect construction in progress will be permitted if public and/or private properties, in the opinion of the Engineer, are not subject to probability of damage. The Contractor shall obtain written permission from the applicable public agency or property owner before any diversion of water outside of public right-of-way will be permitted.

The Contractor shall provide and maintain at all times during construction ample means and devices to promptly remove and properly dispose of all water entering the excavations or other parts of the work. No concrete footing or structure shall be laid in water nor shall water be allowed to rise over them until the concrete or mortar has set at least eight (8) hours. Water shall not be allowed to rise unequally against a wall for a period of twenty-eight (28) days. Dewatering for the structures and pipelines shall commence when ground water is first encountered, and shall be continuous until such time as water can be allowed to rise in accordance with the above paragraph. Dewatering shall be accomplished by well points or some other method which will insure a dry hold and preservation of final lines and grade of the bottoms of excavation, all subject to the approval of the Engineer.

Payment for drainage control shall be included in the compensation paid for the various items of work and no additional compensation will be allowed.

7-9 PROTECTION AND RESTORATION OF EXISTING IMPROVEMENTS [Add the following]:

If any irrigation facilities are encountered they shall be preserved in place or repaired quickly so no serious disruption in watering takes place.

Restoration of other landscape items shall follow the Standard Specifications except as modified by these Special Provisions. If questions arise about how the finished products should look, the contractor should anticipate allowing direction from the Engineer.

At the end of the project, and/or prior to stopping the daily watering routine, all non-traffic disturbed areas shall be sealed with a wood fiber or recycled paper "hydromulch" containing a natural or chemical binding agent acceptable to the City and the Regional Water Quality Control Board per Caltrans Standard Specifications 20-2.07 "Fiber". Formulations and application should be aimed at stabilizing the soil until such time as native plants re-establish themselves. Alternately, such areas may be treated by seeding them with a grass or flower seed and continuing the watering operations until the plants are at least 2" high.

Fiber shall be produced from natural or recycled (pulp) fiber, such as wood chips or similar wood materials or from newsprint, chipboard, corrugated cardboard or a combination of these processed materials, and shall be free of synthetic or plastic materials. Fiber shall not contain more than 7 percent ash as determined by the Technical Association of the Pulp and Paper Industry (TAPPI) Standard T413, shall contain less than 250 parts per million boron and shall be otherwise nontoxic to plant or animal life.

Fiber shall have a water-holding capacity by mass of not less than 1200 percent as determined by the procedure designated in the Caltrans Final Report, CA-DOT-TL-2176-1-76-36, "Water-Holding Capacity for Hydromulch," available from the Caltrans Laboratory.

Fiber shall be of such character that the fiber will disperse into a uniform slurry when mixed with water. Water content of the fiber before mixing into slurry shall not exceed 15 percent of the dry mass of the fiber. The percentage of water in the fiber shall be determined by California Test 226. Fiber shall have the moisture content of the fiber marked on the package. Fiber shall be colored to contrast with the area on which the fiber is to be applied, and shall not stain concrete or painted surfaces.

A certificate of Compliance for fiber shall be furnished to the Engineer in conformance with the provisions in Section 6-1.07, "Certificates of Compliance," in the Caltrans Standard Specifications.

The hydromulch shall have a binder material that is safe for the environment; such as may be created from natural substances like lignin or cellulose, or chemical binders that have been approved by the Regional Water Quality Control Board such as Acrylic Polymer. The binder shall be of sufficient strength when combined with the hydromulch that weeds will be able to re-establish themselves before the hydromulch breaks down. An application rate shall be chosen that leaves a layer approximately ¼ inch thick on all surfaces. A neutral colorant (typically green or brown) shall be added to the hydromulch so that it contrasts slightly with the sand, so that application thoroughness can be readily checked. The colorant shall not stain concrete or other materials that it may come in contact with, and it should be designed to fade after application.

Payment for disturbed area sealant shall be included in the **Lump Sum** unit price bid for Clearing and Grubbing, and no additional payment will be made therefore.

7-10 PUBLIC CONVENIENCE AND SAFETY

7-10.1 Traffic and Access [Add the following paragraphs]:

When entering or leaving roadways carrying public traffic, the Contractor's equipment, whether empty or loaded, shall in all cases yield to public traffic. Construction access shall only be as allowed by the City Engineer and as set forth in these Special Provisions and as shown on the approved Storm Water Pollution Control Plans and the approved Traffic Control Plan.

To the extent possible, access shall be maintained to all properties, businesses and residences by use of temporary ramps and/or detours. Driveway construction shall be phased to allow access during construction. Any closures shall be approved by the City Engineer prior to occurrence.

The Contractor shall notify all affected property owners of the proposed schedule a minimum of 48 hours, but not more than 72 hours, in advance of any limitation or closure of access to their property. Form of said notice shall be as approved by the Engineer and shall contain the date and time of the closure. In the event of delay, whether beyond the control of the Contractor or not, the Contractor shall notify all affected property owners as to the extent of the delay and his revised schedule. In the event of delay over 72 hours, the Contractor shall re-notify the property owners as described above. Payment for notification and coordination shall be included in the compensation paid for the various items of work and no additional compensation will be allowed.

7-10.1.1 Traffic Control System [Add the following section]:

A traffic control system shall consist of closing traffic lanes in accordance with the current California Department of Transportation California Manual on Traffic Control Devices, 2006 Edition.

The provisions in this section will not relieve the **CONTRACTOR** from his responsibility to provide such additional devices or take such measures as may be necessary to comply with the provisions in Section 7-1.09, "Public Safety," of the Standard Specifications.

The **CONTRACTOR** shall submit a detailed traffic control plan (for each phase of construction), signed by a Registered Civil Engineer, to the City of Rancho Mirage 15 days prior to start of construction.

All traffic signals shall remain in operation during the entire construction period. Any temporary modification of existing traffic signals shall be approved by the **ENGINEER.**

The **CONTRACTOR** shall furnish, install and maintain temporary construction signs, delineators, barricades, and other safety devices that are clean, in good condition, and are highly reflective as required for public safety as or directed by the **ENGINEER**. Attention is directed to Section 7, "Responsibilities of the **CONTRACTOR**" of the Standard Specifications and these Special Provisions. This work shall conform to the Standard Specifications, these special provisions and the APWA "Work Area Traffic Control Handbook" (Watch Manual). This includes but is not limited to:

A. Mobilization

B. Furnish, install and maintain temporary signs, flashers, barricades, delineators, etc.

C. Remove temporary facilities upon completion of the project.

The Contractor shall provide at all times one (1) 12-foot wide lane of traffic in each direction for use by public traffic during construction. Portions of the work at or near the project intersections that cause major disruptions to the flow of traffic or cause excessive delays may require a Riverside County Sheriff's Deputy to direct traffic at the discretion of the City Inspector. Prior to work at the intersections, the Contractor shall alert the Inspector to the upcoming work and the proposed traffic control. If a Deputy is required, the Contractor shall make arrangements with the Riverside County Sheriff's Department and pay for the services.

CONTRACTOR shall notify adjacent businesses 48 hours prior to construction that will provide limited access to their business. Access to existing businesses shall be maintained at all times outside of working hours.

CONTRACTOR shall provide access to all existing bus stop locations outside the travel way. Any deviations requirements shall be approved by Sunline Transit Agency and shall be submitted to the **CITY** for approval.

Each vehicle used to place, maintain, and remove components of a traffic control system shall be equipped with a Type II flashing arrow sign which shall be in operation when the vehicle is being used for placing, maintaining, or removing said components. The sign shall be controllable by the operator of the vehicle while the vehicles in motion. The flashing arrow sign shown on the plans shall not be used on the vehicles which are doing the placing, maintaining, and removing of components of a traffic control system, and shall be in place before a lane closure requiring its use is completed.

If any component in the traffic control system is displaced, or ceases to operate or function as specified, from any cause, during the progress of the work, the **CONTRACTOR** shall immediately repair said component to its location.

When lane closures are made for work periods only, at the end of each work period, all components of the traffic control system, except portable delineators place along open trenches or excavation adjacent to the traveled way, shall be removed from the traveled way and shoulder. If the **CONTRACTOR** so elects, said components may be stored at selected central locations, approved by the **ENGINEER**, within the limits of the highway right of way.

7-10.1.2 Payment

Full compensation for providing the **Traffic Control** system (including signs) shall be considered as included in the compensation paid for the various work items and no additional payment will be allowed.

7-10.2 Storage of Equipment and Materials in Public Streets. [Add the following]

The Contractor may, at his/her own expense, maintain and operate a work and storage area outside of the public right-of-way. In such case the Contractor shall submit to Agency written authorization from the owners of the subject property prior to occupation. Occupation of site without written authorization shall be grounds for immediate suspension of work. The Location of site is to be approved by Agency prior to usage. Condition and operation of yard shall conform to these specifications. The Contractor shall assume full responsibility for all damage to the site resulting from his/her operations and shall repair and or replace same at his/her own expense to the satisfaction of the owner of the subject property. The Contractor shall vacate site and clean it and seal it with a "hydromulch" or fiber per Section 7-9, "Protection and Restoration of Existing Improvements" noted above and as approved by the City Engineer within five (5) working days following application for Notice of Completion. The Contractor shall obtain a written release from the property owner specifying the condition of the vacated site and releasing the Contractor from any further clean-up or restoration work and shall submit a copy of such release to Agency. The Notice of Completion will not be issued until said release is submitted. Work areas and storage areas shall be included in and subject to the project Storm Water Pollution Prevention Plan (SWPPP).

Payment for the performance of any work, use or lease of property, maintenance and cleanup during occupation and following completion of all work shall be included in the compensation paid for the various items of work, and no additional compensation will be allowed.

7-10.3 Street Closures, Detours and Barricades. [Add the following]:

The Contractor shall maintain the minimum traffic requirements designated in the General Conditions.

No street or access closure to through traffic will be allowed without the express approval of the Agency.

The Contractor shall be responsible for providing temporary access to all driveways at the end of each work day and as much as possible during the construction day.

The Contractor shall provide and maintain all other signs, barricades pedestals, flashers, delineators and other necessary facilities for the protection of the public within the limits of the construction area. The Contractor shall also post proper signs to notify the public regarding detours and the condition of the roadway, all in accordance with the provisions of the Vehicle Code and the current California Department of Transportation California Manual on Traffic Control Devices, latest Edition. Should the Contractor appear to be neglectful or negligent in furnishing warning and protective measures as provided, the Engineer may direct attention to the existence of a hazard and the necessary warning and protective measures shall be furnished and installed by the Contractor at his expense. Should the Engineer point out the inadequacy of warning and protective measures, such action on the part of the Engineer shall not relieve the Contractor from responsibility for public safety or abrogate his obligation to furnish and pay for these devices.

When lane closures are made for work periods only, at the end of each work period, all components of the traffic control system, except portable delineators placed along open trenches or excavation adjacent to the traveled way, shall be removed from the traveled way and shoulder. If the Contractor so elects, said components may be stored at selected central locations, approved by the Engineer, within the limits of the highway right of way.

Full compensation for conforming to this article shall be considered as included in the various items of work involved, and no additional compensation will be allowed therefore.

All existing stop signs, street name signs and regulatory signs shall be maintained in visible locations during construction and permanently relocated or removed as directed by the plans and the Engineer.

7-10.4.1 Safety Orders. [Add the following paragraph]:

The Contractor shall comply with the provisions of any Agency ordinances or regulations regarding requirements for the protection of excavations and the nature of such protection.

7-10.5 Truck Haul Route. [Add as a new section]:

A truck haul route plan will be prepared and submitted to the Engineer for all trucks transporting materials to and from the project site.

7-10.5.1 General Requirements. [Add as a new section]:

A Proposed truck haul route is to be submitted to the Engineer for review. Upon approval, an approved copy shall be returned to the Contractor. The Contractor shall post an approved copy on the job site. All trucks working that project shall also carry a copy. If a truck is found not to be carrying an approved copy, the Contractor shall be subject to a Notice of Noncompliance (stop work order).

All trucks must cover the dirt with an acceptable tarp during transport for dust containment. Provisions for street sweeping and watering will also be required unless an active wheel washing facility proves that they are un-necessary to the satisfaction of the Engineer.

All truck haul routes, as approved, are good only for the project time period, and trucks shall have to comply with the approved route only. If during the progress of the project an alternate route is needed, the Contractor shall submit a new plan. The haul route application shall contain the following information:

1. Map showing the proposed route
2. Project name
3. Owner's name, address and phone number
4. Grading Contractor's name, address and phone number
5. Type of material being hauled
6. Tract or Project Number involved
7. Grading, construction or Encroachment Permit number.

SECTION 9 - MEASUREMENT AND PAYMENT

9-1 MEASUREMENT OF QUANTITIES FOR UNIT PRICE WORK

9-3.2 Partial and Final Payment [Replace the last paragraph with the following]:

The closure date for periodic progress payments shall be five (5) working days prior to the first Monday of each month. The final progress payment shall not be released until the CONTRACTOR returns the control set of plans and specifications showing the record conditions, and provides any other documentation or submittals required by these specifications.

The full five percent (5%) retention shall be deducted from all payments. The final retention shall be authorized for payment thirty-five (35) days after the date of recordation of the Notice Completion and Acceptance of the work.

In conformance with the State of California Public Contract Code Part 5, Section 22300, the CONTRACTOR may substitute securities for any monies withheld by the AGENCY to ensure performance under the contract.

9-3.3 Delivered Materials [Replace with the following]:

Materials and equipment delivered but not incorporated into the work will not be included in the estimate for progress payment, subject to the discretion of the Engineer.

9-3.4 Mobilization [Replace with the following]:
Mobilization shall consist of preparatory work and operations, including but not limited to those necessary for the movement of personnel, equipment, supplies, and incidentals to the project site; for the establishment of all portable offices, buildings and other facilities necessary for the work on this project; and for all other work and operations which must be performed or cost incurred prior to beginning work on the various contract items on the project site, including vacation of all contractor's incidentals upon completion of work.

The compensation paid for mobilization shall be included in accordance with the Standard Specifications and paid for under the **lump sum** mobilization bid item and shall be full compensation for all costs incurred by the

CONTRACTOR for doing all the work involved in mobilization as specified herein. Payment for mobilization will be included with the first month progress payment and shall be considered full compensation for the cost of such mobilization and administered for the entire contract period.

Mobilization shall also include, but not be limited to, temporary power, construction water (including meter acquisition and fees, scheduling, progress reports, invoicing, permits (except as otherwise provided in these specifications), staging areas, special inspection, mobilizing equipment, personnel and materials, and all other indirect costs associated with completing the work and not covered or compensated under relevant bid items.

PART 2 - CONSTRUCTION MATERIALS

SECTION 200 - ROCK MATERIALS

200-1 ROCK PRODUCTS

200-1.1 General. [Add the following]:

Crushed Aggregate Base shall be per Section 26, Class 2 Aggregate Base, of the State Standard Specifications (Caltrans), ¾" maximum.

Subsection 26-1.02A "Class 2 Aggregate Base," of the Caltrans Specifications, shall be revised to include the following:

"Disintegrated granite, glass, porcelain, brick, wood, steel (reinforcing nails, etc.) or slag shall not be used for aggregate base. If any detrimental material or deleterious substance is found in the base material, it shall be cause for rejection and be removed from the site."

"Grading or blending of the material shall be done through a screening process."

Subsection 26-1.04, "Spreading" of the Caltrans Specifications, shall be revised to include the following:

"Tailgate spreading by dump truck will not be permitted except for spot dumping and in areas not readily accessible to spreading equipment."

SECTION 201 - CONCRETE, MORTAR, AND RELATED MATERIALS

201-1 PORTLAND CEMENT CONCRETE

201-1.1 Requirements
201-1.1.2 Concrete Specified by Class [Add the following as minimums for this project]:

Construction	Concrete Class	Maximum Slump
Street surface improvements (curb and gutter, curb, gutter, drive approach, parkway drain, spandrels, cross gutters):	560-C-3250	4"
Sidewalks, and access ramps	560-C-3250	4"
Concrete surrounding manhole, cleanouts, and vault frames.	560-C-3250	4"
Retaining wall footings	560-C-3250	4"

201-1.2 Materials

201-1.2.1 Portland Cement [Add the following]:

The cement to be used or furnished shall be Type V Portland Cement conforming to ASTM C150, unless otherwise specified.

Portland Cement Concrete for structures shall conform to the provisions in Section 201 of the Standard Specifications except as modified herein.

All cast in place concrete structures shall be cured by the water method except where curing compound method is approved by the Engineer.

201-1.2.4 Chemical Admixtures [Add the following]:

Admixtures may be used by the Contractor if approved by the Engineer and shall conform to Section 201-1.2.4 - Admixtures.

201-1.2.5 Fly Ash [Add the following]:

Fly ash shall not be used in the concrete for this project.

SECTION 203 - BITUMINOUS MATERIALS

203-6.1 General. [Add the following to the end of the subsection]:

Asphalt concrete shall conform to the provisions of Subsection 400-1, "Rock Products," and Subsection 400-4, "Asphalt Concrete", except shall be in accordance with the performance grade as indicated.

The following aggregate size and performance grade of paving asphalt shall be used.

Asphalt Base and Final Course	1-1/2" Max. Medium	PG 70-10
Full Depth Pavement Repair	¾" Max. Medium	PG 70-10

The Contractor shall submit final asphalt mix designs to the Agency for review prior to paving.

SECTION 210 – PAINT AND PROTECTIVE COATINGS

210-1 PAINT.

210-1.6.1 **General.** [Add the following]:

Paint for traffic striping and marking shall conform to Caltrans Specification 84-3.

Materials - Materials shall conform to the provisions in Section 84- "Materials," of the State Standard Specifications and these Special Provisions and contained on the list of "pre-qualified and tests signing and delineation materials".

Painted striping shall have a minimum of two coats.

Paint and glass beads shall conform to the following State Specifications:

Paint	**State Specifications No.**
Rapid Dry water borne white, Yellow and black	8010-91D-30
Glass beads	8010-11E-22 Type 11

210-1.6.2 **Thermoplastic Paint, State Specifications.** [Add the following]:

Thermoplastic materials shall conform to the provisions in Section 84-2.02 "Materials" of the State Standard Specifications and these Special Provisions and as contained on the list of "pre-qualified and tests signing and delineation materials."

210-1.6.2.1 **Scope.** [Add the following section]:

This specification covers a reflectorized pavement striping material of the type that is applied to the road surface in a molten state by **"SCREENED/EXTRUSION"** means with a surface application of glass beads at a specified rate. Upon cooling to normal pavement temperature, the material produces an adherent reflectorized stripe of specified thickness and width, capable of resisting deformation by traffic.

210-1.6.2.2 **Materials.** [Add the following section]:

The Thermoplastic material shall be available in white, yellow and black.

The thermoplastic material shall be homogeneously composed of pigment, fillers, resins and glass reflectorizing spheres. The vendor shall have the option of formulating the material according to his own specifications. However, the solid resin shall be "maleic-modified glycerol ester resin" (alkyd binder). The physical and chemical properties, as specified below, shall apply regardless of the type of formulation.

Glass beads shall be uncoated and conform to AASHTO M247-81 Type 1.

The thermoplastic material shall not deteriorate on contact with sodium chloride, calcium chloride or other de-icing chemicals or because of oil content of paving materials or oil droppings.

210-1.6.2.3 Requirements of the Thermoplastic Mixture. [Add the following section]:

The Specific Gravity of the white and yellow thermoplastic traffic line material shall not exceed 2.15.

The pigment, beads and fillers shall be uniformly dispersed in the resin. The material shall be free from all skins, dirt and foreign objects and shall comply with the requirements according to the table below.

COMPOSITION (Percent by Weight)

COMPONENT	WHITE	YELLOW	BLACK
Binder – See Note (b)	18.0 min.	18.0 min.	18.0 min.
Glass Beads	30-40 min.	30-40 min.	0.0 max.
Titanium Dioxide	10.0 min.	----------	0.0 max.
Calcium Carbonate & Inert Fillers	42.0 max.	50.0 max.	52.0 max.
Yellow and Black Pigments	----------	See Note (a)	See Note (a)

Note (a) Amount of yellow and black pigment, calcium carbonate and inert fillers shall be at the option of the manufacturer, providing that all other requirements of this specification are met.

Note (b) Alkyd binder shall consist of a mixture of synthetic resins, at least once of which is solid at room temperature, and high boiling point plasticizers. At least one-third of the binder composition shall be solid aleic-modified glycerol ester resin and shall be no less than 8 percent by weight of the entire material formulation. The binder shall not contain petroleum based hydrocarbon resins.

The color of the thermoplastic material, after heating for four hours + five minutes at 425 + 3 (218 + C) underagitation, shall meet with the following requirements:

White: Daylight reflectance at 45 degrees – 0 degrees – 75% minimum.

Yellow: Daylight reflectance at 45 degrees – 0 degrees – 45% minimum.

(For highway use, the yellow color shall reasonably match Color Chip Number 13538 of the Federal Standard Number 595 – Test performed at 77F)

Set Time. When applied at a temperature range of 412.5 + 12.5F (211 + 7C) and thickness of 0.060 to 0.125 inch (1.524 to 4.736 mm), the material shall set to bear traffic in not more than 2 minutes.

SECTION 211 - MATERIAL TESTS

211-1.1 Laboratory Maximum Density. [Replace with the following]:

Laboratory maximum density tests shall be performed in accordance with Test Method No. Calif. 216G, Part II. The correction for oversized material as stated in Test Method No. Calif. 216 shall be replaced with Note 2 of ASTM D1557.

211-1.2 Field Density. [Add the following Paragraph]:

The Engineer will make field density tests during the course of construction at the expense of the Agency. If field density tests indicate that any portion of the compacted subgrade has density lower than that specified, the Contractor shall rework that portion until the specified density is obtained. Retest of areas which have failed compaction will be performed by the Engineer at the Contractor's expense.

SECTION 214 - PAVEMENT MARKERS

214-1 General [Add the following]:

Raised pavement markers shall conform to the provisions in Section 82, “Markers and Delineators,” of the State Standard Specifications and these special provisions.

All reflective raised pavement markers shall be Apex Universal Inc., Model 921 **(No Equal).**

Raised Reflective Pavement Markers at fire hydrants shall be Type-I two-way blue reflective markers conforming to the requirements to section 214-5 of the Standard Specifications.

Raised Reflective Pavement Markers shall be installed with Bituminous Adhesive per Section 214-7 of the Standard Specifications.

214-5 Raised Pavement Markers

214-5.1 Materials. [Add the following section]:

The description, type of markers, sampling, tolerances, packaging, and storage of non-reflective and reflective pavement markers shall be as specified in CALTRANS Specification Section 85 "Pavement Markers". The description, sampling, testing, packaging, labeling and storing of epoxies shall be as specified in CALTRANS Specification Section 95 "Epoxy".

214-5.2 Measurement and Payment. [Add the following section]:

Payment for the installation of pavement markers shall be included in the price bid for various items of work, and no additional compensation will be allowed.

PART 3 - CONSTRUCTION METHODS

SECTION 300 - EARTHWORK

300-1.1 General. [Add the following]:

Miscellaneous

1. Contractor shall supply and apply an approved soil sterilant prior to installing new paving.

2. Contractor shall protect existing asphalt concrete pavement within the travel ways of the project streets unless specifically indicated to be removed. The Contractor shall exercise extreme care with his operations so as to not damage the existing pavement. The Contractor shall repair, at his own expense, all pavement deemed solely by the Agency to have been damaged during the project by the Contractor.

3. Contractor shall be responsible for the removal and replacement in kind of all disturbed landscape irrigation and electrical lighting systems and the removal and disposal of any and all trees/landscaping necessary to complete the planned improvements shown or not shown on the plans. Existing irrigation facilities are to be plugged by the Contractor until the replacement system is constructed. To ensure the remainder landscaping irrigation still functions as it exists, temporary facilities will be constructed at the contractor's expense to allow the protection of the existing foliage. Palm trees that are designated to be removed shall be disposed of by the Contractor.

4. Contractor shall protect pipelines, curbs, sidewalks, pavements and facilities from damage caused by settlement, lateral movement, undermining, washout and other hazards created by the demolition operations. Any damage to existing improvements shall be replaced in kind as approved by the Engineer at the Contractor’s own expense.

5. Complete compliance with the Local Air Quality Management Plan (LAQMP) for this project, and all other items of work as directed in these Special Provisions. The Contractor shall be responsible for the procurement and application of a City approved “hydromulch” dust palliative. The City PM10 ordinance and local water quality control Best Management Practices. The Contractor shall place this approved “hydromulch” on all unimproved areas which have been disturbed by their operations. Unimproved areas shall include as a minimum the disturbed areas behind the curb and gutter and the select fill areas within the raised median islands.

6. Contractor shall provide for watering, including developing a water supply and furnishing and placing all water required for work done in the contract, including water used for extra work. Contractor shall obtain a temporary water meter or supply.

7. Contractor shall protect existing utilities, paving, curb and gutter, plant material, and irrigation not indicated on plans to be removed or otherwise made known to the Contractor prior to or during demolition work. If damaged, immediately notify the Agency's Representative. If existing active facilities encountered are not indicated or otherwise made known to the Contractor and require protection or relocation, the Contractor shall be responsible for taking whatever immediate steps are necessary to ensure that the service provided is not interrupted. If services are interrupted as a result of the Contractor's operation, immediately notify the Agency's Representative. If existing utilities are found to interfere with the permanent facilities under construction under this Contract, immediately notify the Agency's Representative, in writing, requesting instructions on their disposition. Do not proceed until written instructions are received from the Agency's Representative.

8. Contractor shall be responsible for cleanup of the job site. Contractor shall leave the site in a clean and orderly manner. This item shall also be interpreted to include the removal or relocation of any additional items not specifically mentioned herein or covered by specific bid item, which may be found within the work limits whether shown or not shown on the plans to be removed or relocated.

9. Measurement and payment for all of the items of work noted above and for the supply and application of any AGENCY approved material shall be included in the contractor's bid item for Clearing and Grubbing and no additional compensation shall be allowed.

300-1.3.2(a) [Add the following]:

Removal of bituminous pavement shall be made to a sawcut at the designated lines of removal shown on the Plans or as designated by the Engineer. A wheel cut may be used at the discretion of the Engineer. Location of sawcut and width of existing pavement to be removed shall be as shown on the plans or as determined by the Engineer in the field. Minimum laying depth of new pavement material shall be 0.10 foot at join lines.

The areas and quantities shown on the plans or specifications are given only for the Contractor's aid in planning the work and/or preparing bids. The Engineer shall designate the limits to be removed and these designated areas shall be considered to take precedence over the areas shown on the plans. No guarantee is made that areas or quantities shown will equal the areas or quantities designated by the Engineer. Spalled or loose blocks of pavement and pavement cracks wider than 3/8 inch will be deemed justification for extending or adding to the removal and replacement of asphalt concrete pavement.

The areas indicated for removal and replacement shall be excavated to the full depth of the proposed pavement section (asphalt and base), or as shown on the plans, regardless of thickness.

300-1.4 Payment. [Replace the first paragraph with the following]:

Compensation for **Clearing and Grubbing** shall be paid for at the **Lump Sum** contract price and no additional compensation will be allowed. Payment shall include full compensation for furnishing all labor, materials, tools, equipment, and doing all work involved in clearing and grubbing as specified. Payment for removal of bituminous pavement and base will be paid in the Sawcut and Remove Existing A.C. Pavement and Base bid items. Existing curb and gutters, curbs, sidewalks, signs and posts, signs and foundations, and other items of removal necessary for construction of the improvements will be considered included in their respective bid items. Items not covered under respective bid items shall be paid for under the bid item for Clearing and Grubbing, and no additional compensation shall be allowed. Earthwork excavation will be considered included in the various items of work, and any other items requiring unclassified excavation, and shall include full compensation for furnishing all labor, materials, tools, and equipment for doing all work involved, including excavating, loading hauling, stockpiling, shoring sheeting, bracing and disposal of all excavated material.

300-4 UNCLASSIFIED FILL

300-4.1 General. [Add the following]:

Unclassified Fill shall be placed to the lines and grades shown on the plans, incorporated exhibits or detail drawings and in accordance with the methods of Section 300-4 of the Standard Specifications.

Soil testing for agricultural suitability will include but is not limited to the following analysis: soil pH; EC; Boron, Calcium and Magnesium content and N, P and K levels. A minimum of one composite sample will be taken for every five acres.

300-4.2 Payment. Compensation for unclassified fill shall be deemed to be included in the bid price for earthworks, and no additional compensation will be allowed.

SECTION 301 TREATED SOILS, SUBGRADE PREPARATION AND PLACEMENT OF BASE MATERIALS

301-1 SUBGRADE PREPARATION.

Preparation of the pavement subgrade shall conform to the provisions of Section 301-1 of the Standard Specifications and these provisions.

301-1.3 Relative Compaction. [Add the following]:

Exposed subgrade to receive new pavement shall be scarified to a depth of 8", moisture conditioned, and recompacted. The top 12" of subgrade under pavement shall be compacted to 95% relative compaction.

301-1.3 Payment. Compensation for subgrade preparation shall be deemed to be included in the bid price for the various items of work, and no additional compensation will be allowed.

301-2 UNTREATED BASE

301-2.1 General. [Add the following]:

Untreated base material shall conform to Section 200-1.1 of these specifications.

Preparation of the pavement subgrade shall conform to the provisions of Section 301-1 of the Standard Specifications and these provisions.

301-2.3.1 Compacting. [Add the following]:

Aggregate Base shall be compacted to 95% relative compaction.

301-2.4 Measurement and Payment. [Add the following]:

Payment for **Aggregate Base** shall be included in the various items of work. Payment shall be full compensation for furnishing all labor, materials, tools, equipment, and incidentals and all work involved in subgrade preparation, scarification, and compaction, and placement of untreated base and no additional compensation will be allowed.

301-6 SOIL STERILANT. [Add the following sections]:

301-6.1 General.

All areas indicated on the Plans to receive P.C.C., stamped concrete, or Asphalt Concrete Pavement over base material shall be prepared in accordance with applicable sections of the Standard Specifications concerning subgrade preparation. In addition, after the compaction is completed, the Contractor shall apply a soil sterilant to the subgrade. Application shall be by spray equipment which provides good mechanical agitation and even coverage of the area to be treated. Spray equipment shall be calibrated before material is applied, and the Engineer's decision as to the effectiveness of the spray equipment shall be final. Great care shall be taken to apply soils sterilant to the designated areas only. Concrete or asphalt may be placed immediately after placement of soil sterilant.

301-6.2 Operator's License.
The Contractor's operator applying the soil sterilant shall be licensed by the State of California, Department of Food and Agricultural Affairs and registered with the Office of the Agricultural Commissioner of Orange County as a pest control officer.

301-6.3 Application.
Any soil sterilant, which is approved in writing by a licensed pest control advisor (for the purpose to which it will apply) may be used upon acceptance by the Engineer. The dye shall not stain concrete or masonry. Certification shall be furnished to the Engineer showing the purchase receipt and manufacturer's recommended rate of application of the material.

301-6.4 Payment.
The Contractor shall supply all labor, materials and equipment to apply the soil sterilant and shall include the cost for application in the unit price for the related items of work and no additional compensation will be allowed.

SECTION 302 - ROADWAY SURFACING

302-5 ASPHALT CONCRETE PAVEMENT

302-5.2.1.1 Localized Full Depth Pavement Repair [Add the following section]:

Full depth Pavement Repair shall be done in the areas indicated in the project plans prior to overlay and shall consist of the sawcut and removal of the full AC pavement section (up to 6" in depth), scarification and recompaction of the top 4" of base material, and placement of Asphalt Concrete to existing finish surface.

302-5.2.3 Removal and Disposal of Material [Add the following]:

Removal shall consist of planing and cutting the pavement where indicated and removing loosened material. No aggregate shall remain on the project at the end of each work day. Aggregate material loosened and directed removed shall become the property of the Contractor and shall be disposed of off the site in accordance with Subsection 300-2.6 as amended by these Special Provisions.

The Contractor shall divert from the landfill all Portland Cement Concrete material and Asphalt Grindings removed from this project. The contractor shall keep accurate weight tickets for material removed from this project to be reused as recycled material. Copies of weight tickets shall be provided to the City.

302-5.4 Tack Coat [Replace with the following]:

Prior to paving over existing asphalt concrete, the surface shall be cleaned, cracks shall be sealed as shown below, and the surface shall have a tack coat of SS-1h emulsion at a rate of 0.10 gallon per square yard applied. The surface shall be free of water, foreign material, or dust, when the tack coat is applied. To minimize public inconvenience, no greater area shall be treated in any one day than is planned to be covered by asphalt concrete during the same day unless otherwise authorized by the Engineer.

A similar tack coat shall be applied to the surface of any course if the surface is such that a satisfactory bond cannot be obtained between it and the succeeding course. The contact surfaces of all cold pavement joints, curbs, gutters, and manholes shall be painted with grade SS-1h emulsified asphalt immediately before the adjoining asphalt concrete or ARHM is placed.

Prior to placing the tack coat, all pavement cracks 1/8" to 1" in width shall be cleaned with a heat lance and sealed with crafco polyflex type III crack sealant, or approved equal. Crack sealant shall be applied with a wand such that excess material is not remaining at the crack surface after sealing. All cracks 1" or greater shall be cleaned with compressed air and broom to remove all loose material from the crack. Asphalt emulsion tack coat shall be applied to the crack faces. The contractor shall fill the crack with ½" maximum medium hot mix and tamp. Any voids beneath the pavement must be filled with compacted hot mix prior to the asphalt overlay. Finish surface of the crack seal shall be flush with the surface in preparation of the asphalt overlay.

Payment shall be included in related items of work and shall include full compensation for all labor, materials, tools, and equipment to complete the work in place, and no additional compensation will be allowed.

302-5.5 Distribution and Spreading. [Add the following]:

The base course, final course, and overlay shall be in conformance with Section 203-6.1 of these specifications

At those locations where new asphalt concrete pavement joins existing asphalt pavement, the Contractor shall provide by cold milling or cold planning a 0.1' minimum header cut such that a butt joint can be achieved. No "feathering" or overlay of asphalt less than 0.1' will be allowed.

302-5.8 Manholes (and other structures). [Add the following]:

Adjustment of Sewer Manholes, Cleanouts and Water Valve Covers

All water valve covers and manhole covers shall be lowered prior to paving and raised after paving is completed.

The raising to grade of sewer and water valve covers, as shown on the plans, shall conform to Section 302-5.8 except that the methods and materials used to perform said work shall be performed in conformance with CVWD Standard Drawing #W-17A and S-1B included in the Appendix of these specifications.

Water valves shall be protected in a place and shall be accessible at all times during construction.

The Contractor shall notify the Coachella Valley Water District forty-eight (48) hours prior to beginning of work.

Other Utility Vaults and Valves

The Contractor shall check with the utility companies shown in Section 5-1 to confirm whether the Contractor is responsible for readjusting vault covers and valves or if it is to be done by the utility company. If such facilities must be lowered for the Contractor to prepare the roadway, the Contractor shall make any arrangements for the utility company to temporarily lower and place suitable steel plates and/or caps over said facilities. The time for such preparation should be included in the Contractor's scheduling. For emergency purposes, gas valves shall be kept readily accessible at all times. Payment for any such utility preparation shall be included with the clearing and grubbing bid item.

302-5.9 Measurement and Payment. [Add the following]:

Asphalt Concrete for pavement sections shall be measured by the square foot. Payment shall be made at the contract unit price bid per square foot and shall include full compensation for all labor, materials, tools, and equipment and for doing all work involved in placing asphalt concrete, complete in place.

Adjust Water Valve Covers and Manhole Covers including all appurtenant work, shall be included in related items of work and shall include full compensation for all labor, materials, tools, and equipment to complete the work in place, and no additional compensation will be allowed.

SECTION 303 - CONCRETE AND MASONRY CONSTRUCTION

303-3 CONCRETE CURBS, WALKS, GUTTERS, CROSS GUTTERS, ALLEY INTERSECTIONS, ACCESS RAMPS AND DRIVEWAYS

303-3.1 General. [Add the following paragraph]:

Concrete curbs, walks, gutters and driveways shall conform to the Standard Specifications as modified herein.

303-3.2 Gutter. [Add the following]:

Prior to acceptance of the curb and gutter constructed by the Contractor, a flow test shall be conducted by the Contractor in the presence of the Engineer. Any new work found to be defective shall be repaired or replaced by the Contractor in accordance with Subsection 303-5.7 of the Standard Specifications.

303-3.3 Measurement and Payment. [Add the following to this section]:

Payment for Curb, Curb and Gutter, Sidewalks, Drive Approaches, Access Ramps, Parkway Drains, and Cross Gutters with Spandrels shall be made at the contract unit bid price as noted in the bid schedule for each item and shall include full compensation for providing this item of work, complete in place, and no additional

compensation will be allowed. The integral/monolithic curb on curb returns at cross gutters/spandrels will be included in the cost of the related items and will not be measured for payment. Payment for the landing area at access ramps will be included in the cost of sidewalks.

Payment for access ramps shall be made at the contract bid price as noted on the bid schedule. The landing area and PC Concrete is considered in the cost of the sidewalk. The ramp pay item shall include only the portion of the ramp within the distinctive scoring markings shown on the standard plans, and shall not include concrete surfaces between curb returns as indicated on the standard drawings. The 3' x 4' truncated dome panel required (yellow "CastinTact" or equivalent set-in-concrete style) shall be included in the bid item for Truncated Domes.

The aggregate base required under curb and gutters, cross gutters, and spandrels, and driveway approaches shall be included in the cost for the related items of work and no additional compensation will be allowed.

SECTION 306 – UNDERGROUND CONDUIT CONSTRUCTION

306-1.1.1 General. [Add the following]:

PVC pipe shall be in conformance with Section 207-17, "PVC Plastic Pipe" and Subsection 306-1.2.13, "Installation of Plastic Pipe and Fittings", 306-1.3, "Backfill and Densification", and 306-1.2.12, "Field Inspection for Plastic Pipe and Fittings".

Fire Hydrant installation will be by the Coachella Valley Water District (CVWD.) Contractor shall coordinate and schedule with the District for hydrant relocation work.

306-1.6 Basis for Payment for Open Trench Installations. [Add the following]:

The Contract unit price paid per linear foot of PVC drain pipe and Schedule 80 Irrigation Sleeves shall include full compensation for all materials, labor, tools, equipment and incidentals, and for doing all the work involved in supplying and installing PVC pipe, complete in place including, but not limited to, excavation and disposal of materials, bedding materials, backfill, and compaction, finish surface replacement as shown on the Plans, per these Special Provisions, and as directed by the Engineer, and no additional compensation will be allowed therefore.

Full compensation for coordinating with the Coachella Valley Water District for Fire Hydrant relocation shall be considered as included in the Contract Lump Sum Price for Mobilization and no additional payment will be made thereof.

SECTION 308-4 – PLANTING

308-4.5 Tree and Shrub Planting [Add the following]:

Transplant Trees

Trees to be transplanted shall be removed and stored or transplanted to the locations shown on the plans in conformance with the provisions in Section 20-4, "Highway Planting," of the Standard Specifications and these special provisions.

When the trees are removed and the work within the areas to which the trees are to be transplanted is not completed to the stage at which the trees can be planted, the trees shall be stored and maintained until transplanting can be completed. In other cases, the trees shall be planted at the new locations the same day the trees are removed.

Trees to be transplanted shall be pruned just prior to removing the trees. Pruning of trees to be transplanted shall include removal of broken or bruised branches one inch or larger in diameter, deadwood, and suckers. Pruning shall be in conformance with the provisions in Section 20-4.055, "Pruning," of the Standard Specifications. Tree seal compounds shall not be used to cover pruning cuts.
Removed pruned materials shall be disposed of in conformance with the provisions in Section 7-l.13, "Disposal of Material Outside the Highway Right of Way," of the Standard Specifications. At the Contractor's option and expense, prunings may be reduced to chips. Chipped materials shall be spread within the highway right of way at those locations designated by the Engineer.

The Contractor shall determine the methods to be used to transplant trees, including removing, transporting, storing if required, planting, guying, and maintaining the trees. The Contractor shall submit a proposed plan for this work, in writing, to the Engineer prior to the start of the work. The proposed plan shall include, but not necessarily be limited to, root ball size, method of root ball containment, and maintenance programs for each tree to be transplanted.

When trees are planted, a root stimulant, approved by the Engineer, shall be applied to the roots of each tree in conformance with the printed instructions of the root stimulant manufacturer. A copy of the instructions shall be furnished to the Engineer before applying any stimulant. Root stimulant to be used shall be submitted to the Engineer not less than 2 weeks prior to the stimulant's intended use. Root stimulants not approved by the Engineer shall not be used.

Holes resulting from the removal of transplanted trees shall be backfilled the same day the trees are removed. Soil from the surrounding area may be used to backfill these holes. The backfill shall be graded to conform with the adjacent existing grade.
Watering basins shall be constructed around each transplanted tree.

Trees to be transplanted shall be maintained from the time the trees are removed to the time of acceptance of the contract, provided however, that the contract will not be accepted unless the trees have been satisfactorily maintained for 90 days after transplanting has been completed. The trees shall be watered and fertilized as necessary to maintain the trees in a healthy condition. Trash, debris and weeds within basins, including the basin walls, shall be removed and disposed of in conformance with the provisions in Section 7-1.13, "Disposal of Material Outside the Highway Right of Way," of the Standard Specifications. Weeds shall be removed before the weeds exceed 2 inches in length. Pesticides to be used for weed control shall be submitted to the Engineer not less than 2 weeks prior to their intended use. Pesticides not approved by the Engineer shall not be used.

The quantity of transplant trees will be measured by the unit as determined from actual count in place, excluding additional replacement trees.

The contract unit price paid for transplant tree shall include full compensation for furnishing all labor, materials, tools, equipment, and incidentals, and for doing all the work involved in transplanting trees, complete in place, as shown on the plans, as specified in the Standard Specifications and these special provisions, and as directed by the Engineer.

SECTION 310 PAINTING

310-5.6 Painting Traffic Striping, Pavement Markings, and Curb Markings

310-5.6.1 General [Add the following]:

Traffic signs, stripes, legends, and raised pavement markers shall conform to Manual on Uniform Traffic Control Devices for Streets and Highways (MUTCD) latest Edition.

Markers and delineators shall conform to the provisions in Section 82, “Markers and Delineators,” of the State Standard Specifications and these special provisions.

The first coat of traffic striping shall be placed within 24 hours after the new roadway surface is complete. The second and final coat of traffic striping shall be placed no earlier than 14 calendar days after the first coat or at the time the reflective pavement markers are placed.

Traffic striping shall conform to Sections 210 and 310 as modified by these Special Provisions. Traffic control shall be as per APWA "WATCH" Handbook and the current California Department of Transportation California Manual on Traffic Control Devices, latest Edition.

Raised pavement markers shall conform to the California Department of Transportation, Standard Specifications, Section 85 and shall be of the type as called for on the Plans and these special provisions.

All lines 8" or greater in width shall be thermoplastic, unless otherwise noted.

All legends, crosswalks, limit lines, and shapes shall consist of Alkyd Resin Thermoplastic, unless otherwise noted (See Specifications below). Legends shall conform to City stencils, size and shape.
Any removal of conflicting traffic stripes and markings shall be accomplished by the wet sandblasting method or waterblasting method. The machine used for this purpose shall meet all requirements of the air pollution control district having jurisdiction in the project area. All sand used in wet sandblasting shall be removed by the use of a street sweeper without delay as the operation progresses.

Crosswalk lines, stop limit lines, and chevrons are considered as pavement markings.

All thermoplastic markings shall be reflectorized.

Placement of markers using bitumen adhesive shall conform to the requirements for placing markers in said Section 85-1.06 of the State Standard Specifications, except as follows:

Markers shall not be placed when the pavement or air temperature is 50° F or less.

Curb to be painted shall be marked for approval prior to painting.

Signs shall be set on steel 2" X 2" (brown) quick punch posts, with 2 ¼” X 2 ¼” sleeved base set in a PCC base of 560-C-2500 concrete. All posts shall be electrostatically powder coated with City approved brown coating. Base shall be a minimum of 24" deep by 12" square (City of Rancho Mirage Standard Detail No. 602, unless otherwise noted), as directed by the **ENGINEER**.

New signs shall be per sizes shown on plans. All warning, regulatory and guide signs shall be 3M (or pre-approved equal) high intensity grade reflective. Prior to installation, all new signs shall be approved by the City of Rancho Mirage.

310-5.6.3 Equipment [Add the following]:

All parts of the equipment which come in contact with the material shall be constructed for easy accessibility for cleaning and maintenance. The equipment shall operate so that all mixing and conveying parts, including the line dispensing device, maintain the material at the plastic temperature. The use of pans, aprons, or similar appliances which the dispenser overruns will not be permitted. The equipment shall provide for traffic marking application of varying widths.

The application equipment shall be mobile and maneuverable to the extent that straight lines can be followed and normal curves can be made in a true arc.

Glass spheres shall be applied to the surface of the completed stripe by an automatic bead dispenser attached to the striping machine so that the beads are dispensed closely behind the installed line. The glass sphere dispenser shall be equipped with an automatic cut-off control synchronized with the cut-off for the thermoplastic material.

A special kettle shall be provided for uniformly melting and heating the thermoplastic material. Each kettle must be equipped with an automatic thermostatic control device for positive temperature control and to prevent overheating or scorching of the material. The heating kettle and application equipment shall meet the requirements of the National Fire Underwriters of the National Fire Protection Association of the State and local authorities.

310-5.6.7 Layout, Alignment, and Spotting [Add the following]:

Layout - The **CONTRACTOR** shall furnish the necessary control points for all striping and markings, and shall be responsible for the completeness and accuracy thereof, to the satisfaction of the **ENGINEER**.

The **CONTRACTOR** shall perform all layout, alignment, and spotting for traffic stripes and markings. Traffic striping shall not vary by more than ½ inch in 50 feet from the alignment shown on the lanes. The dimensional details of the stripes and markings shall conform to the provisions set forth in the Traffic Manual and Maintenance Manual, available from **CALTRANS**.

Spotting with cat tracks or dribble lines shall be performed prior to the removal of existing stripes. Cat tracks shall consist of spots of paint not more than 3 inches in width and not more than 5 feet apart along the alignment of the stripe. Paint for the cat tracks shall be the same color as that for the intended stripe.

Spotting - Spotting shall be completed prior to the removal of any existing stripes or markings. Existing stripes and markings shall be removed prior to painting new ones, but in no case shall any section of street be left without the proper striping for more than 24 hours, or over weekends or holidays.

NO STRIPING SHALL BE INSTALLED UNTIL THE LAYOUT AND SPOTTING HAVE BEEN SPECIFICALLY APPROVED BY THE ENGINEER.

310-5.6.8 Application of Paint [Add the following]:

A primer sealer, recommended by the manufacturer of the thermoplastic material, shall be applied prior to the installation of the thermoplastic material on Portland Cement Concrete surfaces, and on other types of pavement if recommended by the thermoplastic material manufacturer. The primer shall be void of solvent and water prior to the installation of the thermoplastic material.

For optimum adhesion, the thermoplastic material shall be installed in a melted state at a temperature between 400-440F (204-226C) on a clean, dry, and solvent-free surface.

Longitudinal lines shall be offset at least 2 inches (5 cm) from the construction joint(s) of Portland Cement concrete pavements and joint(s) and shoulder breaks of bituminous concrete pavements.

Thermoplastic pavement marking materials shall not be applied by the extrusion method when pavement temperatures are below 50F (10C), or by the spray method when the pavement temperatures are below 55F (13C), or when the surface of the pavement shall evidence moisture. If thermoplastic material is not dispensed by a screen/extrusion device or a spray device, the material shall not be applied when the pavement or air temperature is below 65F (18C).

NOTE: Opening 6 inches (15 cm) in length may be provided at 20 foot (6 cm) intervals in edgelines placed on the inside of super elevated curves to prevent ponding of water on the pavement surface.

Thickness measurement shall be accomplished by placing black tapes, film, or metal plates of known and uniform thickness in the area to be striped. Once the striper has passed over, the sample is removed by making sharp cuts with a knife, and measurements of the stripe plus film are made with a micrometer or vernier calipers with a property correction for the film base. For longitudinal lines, these thickness checks shall be made every

1.3 mile or more frequently, at the judgment of the Engineer. For symbols and intersection markings, the frequency of checking shall be at the option of the Engineer. These thicknesses shall be considered as the average of 2 or more measurements made in a 3 foot distance.

310-5.6.8.1.1 Observation Period [Add the following Section]:

Prior to consideration of final acceptance of all work completed under these sections and as shown on the plans, there shall be a 90-day observation period, beginning upon the satisfactory completion of all work required by the intermediate completion date to be determined by the City Engineer for substantial completion of the work.

During the 90-day observation period, the thermoplastic pavement marking material furnished and installed shall be warranted against failure due to blistering, excessive cracking, bleeding, staining, discoloration, oil content of the pavement materials, smearing or spreading under heat, deterioration due to contact with grease deposits, oil diesel fuel, or gasoline drippings, chipping, spalling, poor adhesion to the pavement materials, loss of reflectivity, vehicular damage and wear.

The Contractor, at no expense to the City, shall replace any pavement markings that will not perform satisfactorily under traffic during the 90-day observation period due to defective materials and/or application. (Failure to comply with any portion of this specification shall be considered as unsatisfactory performance of the thermoplastic pavement marking material.

Marking replacement shall be performed in accordance with the requirements specified herein for the initial application, including but not limited to, surface cleaning, pavement marking removal, seasonal and weather limitations, etc.

310-5.6.8.1.2 Warranty [Add the following section]:

The thermoplastic pavement marking materials furnished and installed by the contractor under this specification shall be guaranteed by the Contractor against failure due to poor adhesion resulting from defective materials or methods of application.
For non-defective pavement surfaces carrying volumes less than 50,000 vehicles per day, the Contractor shall guarantee to replace or renew, without cost to the City, that part of the pavement markings installed which have not remained to perform useful service as follows:

Stop a) Crosswalks, stop lines and legends – 75% of the total any one intersection for one year.
b) Lane lines, edgelines and centerlines – 90% of a unit for two years and 80% of a unit for four years. [A “unit” is defined as any length of highway having installed thereon 2,000 lineal feet (610 meters) of line of specified width in any combination or pattern.]

The replacement material installed under this guarantee shall be guaranteed the same as the original material, from the date of the original installation.

310-5.6.10 Measurement and Payment

Payment for pavement markers shall be included in the bid for Traffic Striping, Markings, Markers & Signs, and shall include full compensation for furnishing all labor, materials, tools, equipment and incidentals, including establishing alignment for layout work as shown on the plans and as required in the Specifications.

Payment for Traffic Stripes and Pavement Markings shall be considered as included in the bid for Traffic Striping, Markings, Markers & Signs and shall include full compensation for furnishing all labor, materials, tools, equipment and incidentals and for doing all the work involved in traffic stripes, and pavement markings, including establishing alignment for stripe and layout work as shown on the plans and as required in the Specifications.

310-5.7.1 Install, Remove and Relocate Roadside Signs [Add the following Section]:

Existing roadside signs at locations shown on the plans to be removed shall not be removed until replacement signs have been installed or until the existing signs are no longer required for direction of public traffic, unless otherwise directed by the **ENGINEER**.

New roadside signs shall be installed at the locations shown on the plans or as directed by the **ENGINEER**, and shall conform to the provision in Section 56-2 “Roadside Signs,” of the State Standard Specifications and these Special Provisions.

310-5.7.2 Payment [Add the following section]:

Payment for removing and relocating roadside signs shall be considered as included in the bid for traffic signing and striping and shall include full compensation for furnishing all labor, materials, tools, equipment and incidentals as shown on the plans and as required in the Specifications.

Payment for new traffic roadside signs and posts shall be considered as included in the bid price for Traffic Striping, Markings, Markers & Signs, and shall include full compensation for furnishing all labor, materials, tools and equipment for installing sign panels, and sign posts, footings and other related appurtenances as shown on the plans, and as required in the Specifications.

APPENDIX

STANDARD PLANS USED FOR THE PROJECT

"Greenbook" Standard Drawing 320-1

City of Rancho Mirage Standards 200, 202, 203, 206, 208, 210, 213, 214, 220, 223, 306, 408, 602, 604, 615

CVWD Sanitary Sewer Construction Standard

STANDARD PLANS FOR PUBLIC WORKS

2006 Edition

Promulgated By
The "Greenbook" Committee
Of
Public Works Standards, Inc.

Published By:

BNi Building News

990 Park Center Drive Drive, Suite E, Vista, CA 92081
(800) 873-6397
COPYRIGHT© BY BNI PUBLICATIONS INC.

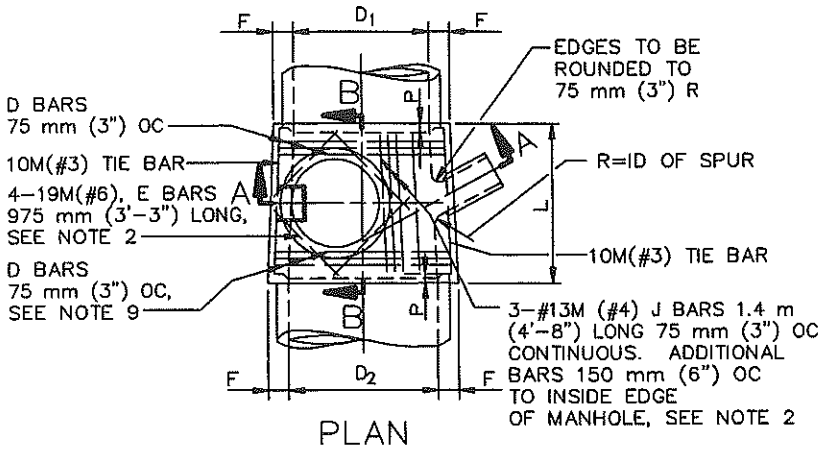

PLAN
(SHAFT NOT SHOWN)

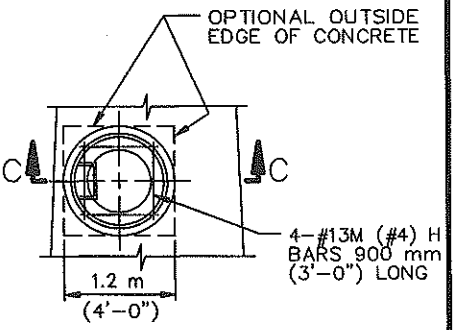

DETAIL "N"
(RINGS AND COVER NOT SHOWN)
(SEE NOTE 1)

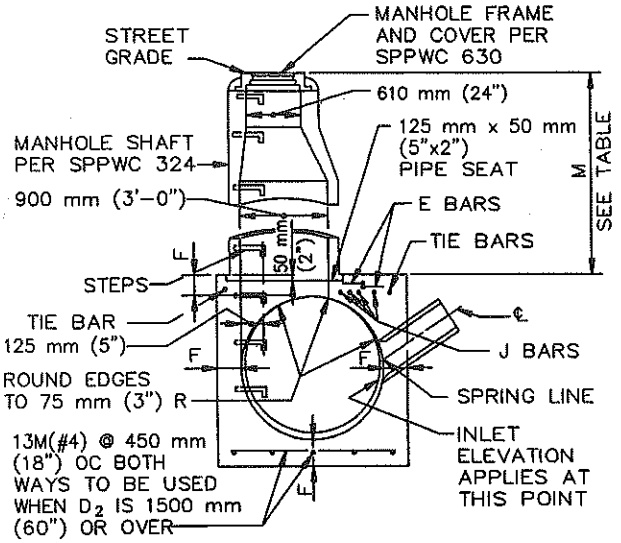

SECTION A–A

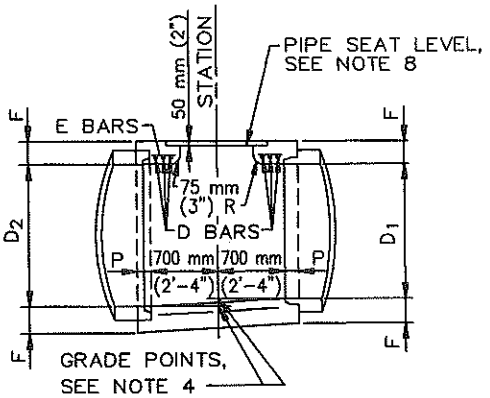

SECTION B–B

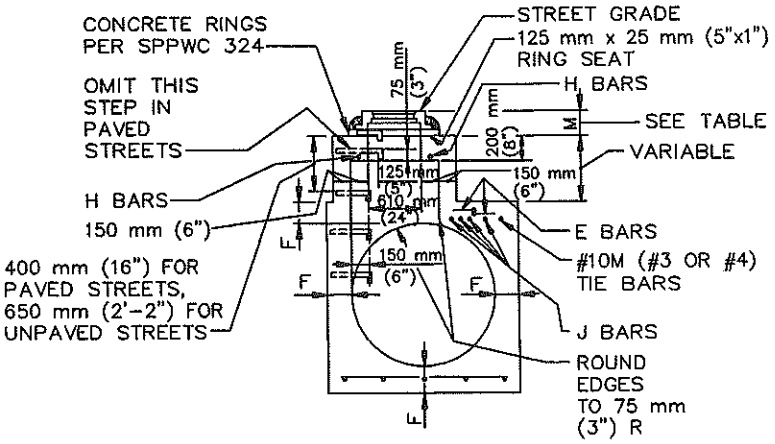

SECTION C–C

STANDARD PLANS FOR PUBLIC WORKS CONSTRUCTION

PROMULGATED BY THE PUBLIC WORKS STANDARDS INC. GREENBOOK COMMITTEE 1992 REV. 1996

MANHOLE PIPE TO PIPE
MAIN LINE ID=900 mm (36") OR LARGER

USE WITH STANDARD SPECIFICATIONS FOR PUBLIC WORKS CONSTRUCTION

STANDARD PLAN METRIC
320–1
SHEET 1 OF 4

TABLE OF VALUES FOR F	
D_2	F
900 mm (36")	165 mm (6 1/2")
975 mm (39")	180 mm (7")
1050 mm (42")	190 mm (7 1/2")
1125 mm (45")	195 mm (7 3/4")
1200 mm (48")	205 mm (8")
1275 mm (51")	215 mm (8 1/2")
1350 mm (54")	230 mm (9")
1425 mm (57")	235 mm (9 1/4")
1500 mm (60")	240 mm (9 1/2")
1575 mm (63")	255 mm (10")
1650 mm (66")	260 mm (10 1/4")
1725 mm (69")	275 mm (10 3/4")
1800 mm (72")	280 mm (11")
1950 mm (78")	300 mm (11 3/4")
2100 mm (84")	320 mm (12 1/2")
2250 mm (90")	335 mm (13 1/4")
2400 mm (96")	355 mm (14")
2550 mm (102")	395 mm (15 1/2")
2700 mm (108")	405 mm (16")
2850 mm (114")	420 mm (16 1/2")
3000 mm (120")	430 mm (17")
3150 mm (126")	430 mm (17")
3300 mm (132")	445 mm (17 1/2")
3450 mm (138")	445 mm (17 1/2")
3600 mm (144")	455 mm (18")

TABLE OF VALUES FOR M (SEE NOTE 1)				
SECTION	PAVED STREET		UNPAVED STREET	
	MAX	MIN	MAX	MIN
A–A		867 mm (2'–10 1/2")		1060 mm (3'–6")
C–C	282 mm (11")	217 mm (8 1/2")	410 mm (16")	380 mm (15")

STANDARD PLANS FOR PUBLIC WORKS CONSTRUCTION

MANHOLE PIPE TO PIPE
MAIN LINE ID = 900 mm (36") OR LARGER

STANDARD PLAN METRIC
320–1
SHEET 2 OF 4

NOTES

1. WHEN DEPTH M FROM STREET GRADE TO THE TOP OF THE BOX IS LESS THAN 867 mm (2'–10 1/2") FOR PAVED STREETS OR 1060 mm (3'–6") FOR UNPAVED STREETS, CONSTRUCT MONOLITHIC SHAFT PER SECTION C–C AND DETAIL "N". SHAFT FOR ANY DEPTH OF MANHOLE MAY BE CONSTRUCTED PER SECTION C–C. WHEN DIAMETER D_1 IS 1200 mm (48") OR LESS, CENTER OF SHAFT MAY BE LOCATED PER NOTE 2.

2. CENTER OF MANHOLE SHAFT SHALL BE LOCATED OVER CENTER LINE OF STORM DRAIN WHEN DIAMETER D_1 IS 1200 mm (48") OR LESS, IN WHICH CASE PLACE E BARS SYMMETRICALLY AROUND SHAFT AT 45° WITH CENTERLINE AND OMIT J BARS.

3. L AND P SHALL HAVE THE FOLLOWING VALUES UNLESS OTHERWISE SHOWN ON THE PROJECT DRAWINGS:
   A. D_2=2400 mm (96") OR LESS, L=1.7 m (5'–6"), P=130 mm (5")
   B. D_2 OVER 2400 mm (96"), L=1.8 m (6'–0"), P=210 mm (8")
   L MAY BE INCREASED OR LOCATION OF MANHOLE SHIFTED TO MEET PIPE ENDS. WHEN L GREATER THAN THAT SHOWN ABOVE IS SPECIFIED, D BARS SHALL BE CONTINUED 150 mm (6") OC.

4. STATIONS OF MANHOLES SHOWN ON PLANS APPLY AT CENTERLINE OF SHAFT. ELEVATIONS ARE SHOWN AT CENTERLINE OF SHAFT AND REFER TO THE PROLONGED INVERT GRADE LINES.

5. REINFORCEMENT SHALL CONFORM TO ASTM A 615M, GRADE 300 (ASTM A 615, GRADE 40), AND SHALL TERMINATE 40 mm (1 1/2") CLEAR OF CONCRETE SURFACES UNLESS OTHERWISE SHOWN.

6. FLOOR OF MANHOLE SHALL BE STEEL TROWELED TO SPRING LINE.

7. BODY OF MANHOLE SHALL BE POURED IN ONE CONTINUOUS OPERATION EXCEPT THAT A CONSTRUCTION JOINT WITH A LONGITUDINAL KEYWAY MAY BE PLACED AT SPRING LINE.

8. THICKNESS OF THE DECK SHALL VARY WHEN NECESSARY TO PROVIDE A LEVEL SEAT BUT SHALL NOT BE LESS THAN THE TABULAR VALUES FOR F SHOWN ON SHEET 2.

9. D BARS SHALL BE #13M (#4) FOR D_2=975 mm (39") OR LESS, #16M (#5) FOR D_2= 1050 mm (42") TO 2100 mm (84") INCLUSIVE AND #19M (#6) FOR D_2= 2250 mm (90") OR OVER.

10. CENTERLINE OF INLET PIPE SHALL INTERSECT INSIDE FACE OF CONE AT SPRING LINE UNLESS OTHERWISE SHOWN.

11. STEPS SHALL CONFORM TO SPPWC 635 OR 636. UNLESS OTHERWISE SHOWN, STEPS SHALL BE UNIFORMLY SPACED 350 mm (14") TO 375 mm (15") OC. THE LOWEST STEP SHALL NOT BE MORE THAN 600 mm (24") ABOVE THE INVERT.

12. THE FOLLOWING CRITERIA SHALL BE USED FOR THIS MANHOLE:
    A. MAIN LINE = 900 mm (36") INSIDE DIAMETER OR LARGER. EXCEPT IF THE MAIN LINE RCP DOWNSTREAM OF MANHOLE IS 900 mm (36") TO 1050 mm (42") INSIDE DIAMETER AND THE MAIN LINE RCP UPSTREAM IS 825 mm (33") OR LESS SPPWC 321 SHALL BE USED.

B. THE OUTSIDE DIAMETER OF THE LATERAL MUST BE LESS THAN OR EQUAL TO 1/2 THE INSIDE DIAMETER OF THE MAIN LINE. IF THE UPSTREAM AND DOWNSTREAM DIAMETERS OF THE MANHOLE ARE NOT THE SAME, THE GOVERNING INSIDE DIAMETER OF THE MAIN LINE SHALL BE CONSIDERED TO BE THAT WHERE THE EXTENDED CENTERLINE OF THE LATERAL ENTERS THE MANHOLE.

C. IN NO INSTANCE SHALL THE INSIDE DIAMETER OF THE LATERAL TO THE MANHOLE BE GREATER THAN 750 mm (30").

13. MANHOLE FRAME AND COVER SHALL CONFORM TO SPPWC 630 UNLESS OTHERWISE SHOWN.

14. MANHOLE SHAFT SHALL CONFORM TO SPPWC 324 UNLESS OTHERWISE SHOWN.

15. WHERE A MANHOLE SHAFT – 900 mm (36") WITHOUT REDUCER IS SPECIFIED REFER TO SPPWC 326.

16. WHERE A PRESSURE MANHOLE SHAFT – WITH ECCENTRIC REDUCER IS SPECIFIED REFER TO SPPWC 328.

17. WHERE A PRESSURE MANHOLE SHAFT – 914 mm (36") WITHOUT REDUCER IS SPECIFIED REFER TO SPPWC 329.

18. THE FOLLOWING SPPWC ARE INCORPORATED HEREIN:

324	MANHOLE SHAFT – WITH ECCENTRIC REDUCER
326	MANHOLE SHAFT – 900 mm (36") WITHOUT REDUCER
328	PRESSURE MANHOLE SHAFT – WITH ECCENTRIC
329	PRESSURE MANHOLE SHAFT 914 mm (36") WITHOUT REDUCER
630	610 mm (24") MANHOLE FRAME AND COVER
633	914 mm (36") MANHOLE FRAME AND COVER
635	STEEL STEP
636	POLYPROPYLENE PLASTIC STEP

CITY OF RANCHO MIRAGE

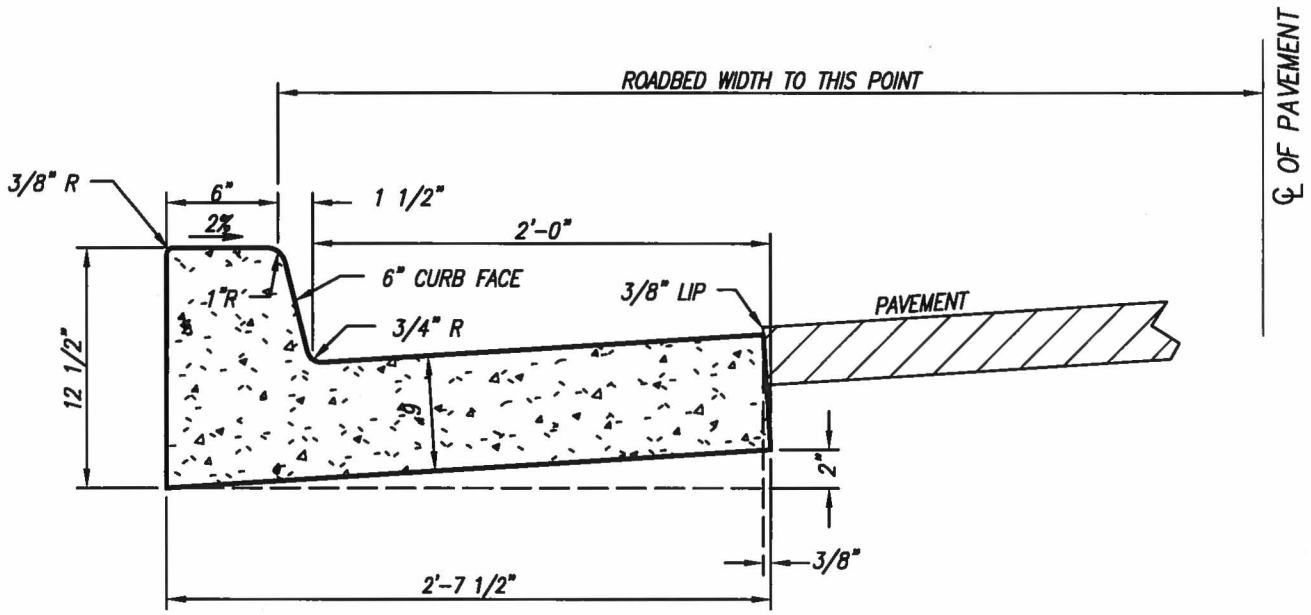

CLASS 560-C-3250 CONCRETE (NO FLY ASH) *
1.601 CU. FT./L.F.
1 CU. YD. = 16.86 L.F.

MINIMUM PERMISSIBLE GRADE 0.50%

MINIMUM SUBGRADE COMPACTION 95% RELATIVE TO MAXIMUM

MAX. GRADE BREAK ON ROADWAYS SHALL NOT EXCEED 0.50%

ALL GUTTER SHALL BE "FLOW TESTED" PRIOR TO PAVING

SEE STANDARD 206 FOR JOINT DETAILS

* USE CONCRETE CURING COMPOUND, ASTM C309/AASHTO M148, TYPE 2, CLASS A OR B, WITH WHITE PIGMENT. AFTER CURING, COMPOUND SHALL BE "POWER WASHED" OFF CURB TOP AND FACE BEFORE ANY CURB PAINTING

CITY OF RANCHO MIRAGE		STANDARD DETAIL 200
REVISIONS	TYPE "A" (6") CURB & GUTTER	
12/17/2001		
* 7/5/2012		
	7/12/12	
	APPROVED BY: CITY ENGINEER DATE	

CITY OF RANCHO MIRAGE

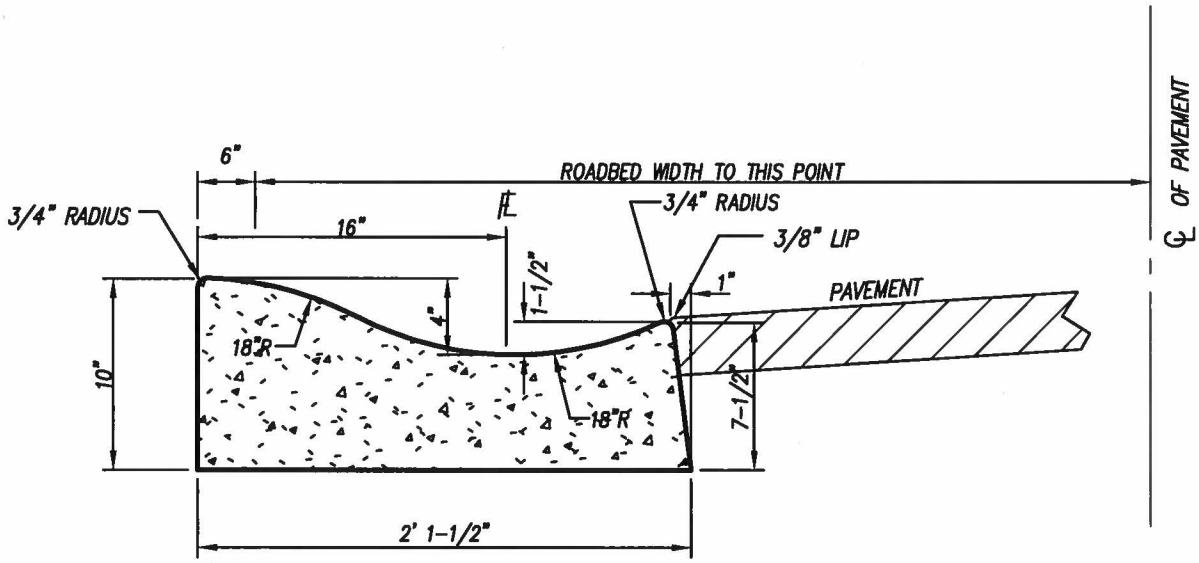

CLASS 560-C-3250 CONCRETE (NO FLY ASH)
1.319 CU. FT./L.F.
1 CU. YD.=20.47 L.F.

MINIMUM PERMISSIBLE GRADE 0.50%

MINIMUM SUBGRADE COMPACTION 95% RELATIVE TO MAXIMUM

MAX. GRADE BREAK ON ROADWAYS SHALL NOT EXCEED 0.50%

ALL GUTTER SHALL BE "FLOW TESTED" PRIOR TO PAVING

SEE STANDARD 206 FOR JOINT DETAILS

* USE CONCRETE CURING COMPOUND, ASTM C309/AASHTO M148, TYPE 2, CLASS A OR B, WITH WHITE PIGMENT. AFTER CURING, COMPOUND SHALL BE "POWER WASHED" OFF CURB TOP AND FACE BEFORE ANY CURB PAINTING

NOTE: USE OF THIS STD. REQUIRES PRIOR APPROVAL FROM THE CITY ENGINEER. THIS SHOULD ONLY BE USED WHEN MATCHING EXISTING ROLL-CURB. SEE STANDARD DRAWING 222 FOR "WEDGE CURB" ALTERNATIVE.

CITY OF RANCHO MIRAGE		STANDARD DETAIL 202
REVISIONS	TYPE "C" CURB (ROLLED)	
12/17/2001		
* 7/5/2012	7/12/12	
	APPROVED BY: CITY ENGINEER DATE	

CITY OF RANCHO MIRAGE

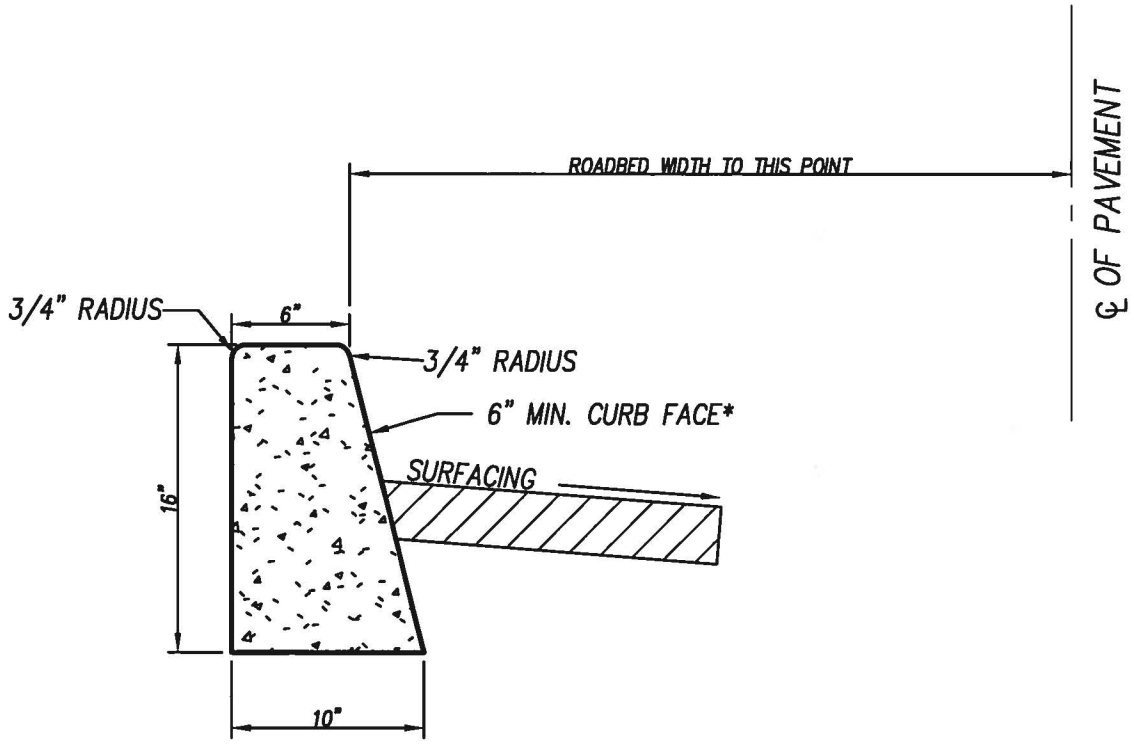

CLASS 560-C-3250 CONCRETE (NO FLY ASH)
.888 CU. FT./L.F.
1 CU. YD. = 30.41 L.F.

MINIMUM PERMISSIBLE GRADE 0.50%

MINIMUM SUBGRADE COMPACTION 95% RELATIVE TO MAXIMUM

MAX. GRADE BREAK ON ROADWAYS SHALL NOT EXCEED 0.50%

SEE STANDARD 206 FOR JOINT DETAILS

* USE CONCRETE CURING COMPOUND, ASTM C309/AASHTO M148, TYPE 2, CLASS A OR B, WITH WHITE PIGMENT. AFTER CURING, COMPOUND SHALL BE "POWER WASHED" OFF CURB TOP AND FACE BEFORE ANY CURB PAINTING

8" CURB FACE SHALL BE USED ON ALL ROADWAY MEDIAN CURBS

CITY OF RANCHO MIRAGE		STANDARD DETAIL 203
REVISIONS	TYPE "D" (6" OR 8") CURB	
12/17/2001		
* 7/5/2012		
	7/12/12	
	APPROVED BY: CITY ENGINEER DATE	

CITY OF RANCHO MIRAGE

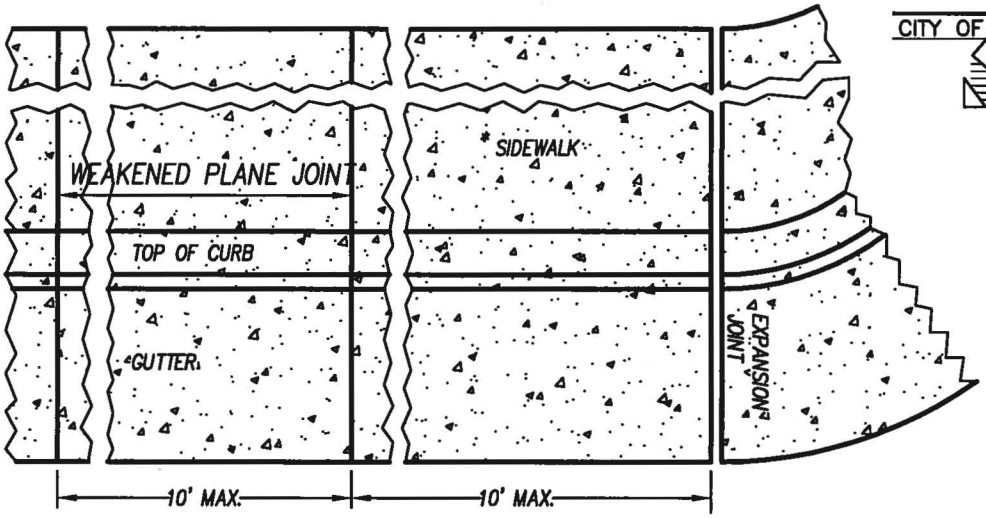

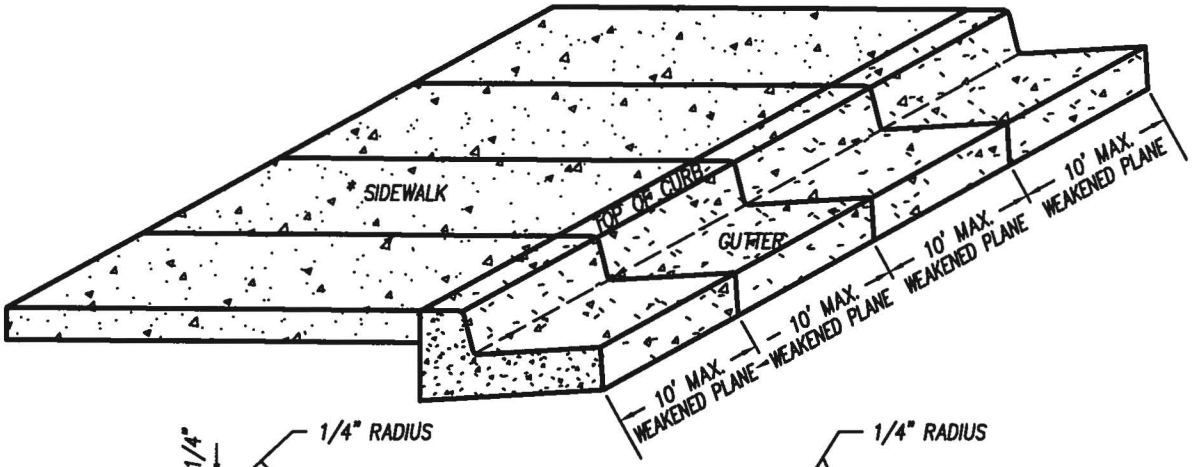

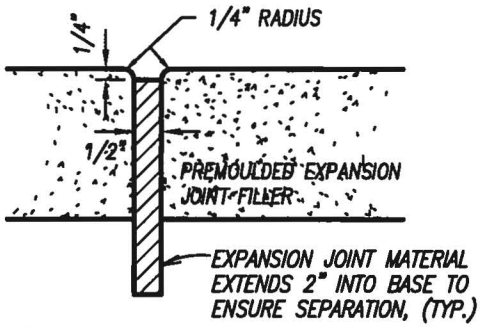

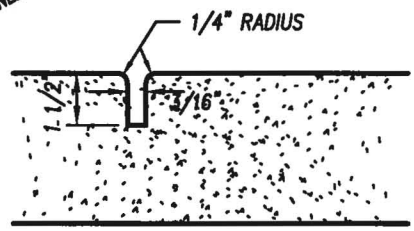

EXPANSION JOINT

EXPANSION JOINTS TO BE INSTALLED AT ALL B.C., E.C.,
* CURB RETURNS, DRIVEWAYS, CATCH BASINS, OR
* SIMILAR STRUCTURES, IN CURBS AND SIDEWALKS
* SIDEWALKS SHALL ALSO GET EXPANSION JOINTS @ 40' O.C.

WEAKENED PLANE JOINT

10' INTERVAL BETWEEN TRANSVERSE JOINTS MAY BE VARIED TO ALLOW MATCHING OF JOINTS IN ADJACENT EXISTING IMPROVEMENTS.

NOTE:
FOR MACHINE EXTRUDED CURBING IT IS REQUIRED TO "SAWCUT" JOINTS INTO THE CONCRETE WHEN IT HAS SET ENOUGH TO NOT FRACTURE. DO PARTIAL CUTS AT 10' INTERVALS, THROUGH THE CURB AND 1.5" INTO THE GUTTER FOR WEAKENED PLANE JOINTS.
FOR EXPANSION JOINTS IN EXTRUDED CURBING, SAWCUT COMPLETELY AND INSERT JOINT MATERIAL AS DESCRIBED ABOVE.

CITY OF RANCHO MIRAGE		STANDARD DETAIL 206
REVISIONS	CURB, GUTTER & *SIDEWALK JOINTS	
11/27/2002		
* 7/5/2012		
	7/12/12	
	APPROVED BY: CITY ENGINEER DATE	

CITY OF RANCHO MIRAGE

RESIDENTIAL STREETS: 4" A.C. OVER 4" A.B.*
ALL OTHER STREETS: 5" A.C. OVER 10" A.B.*

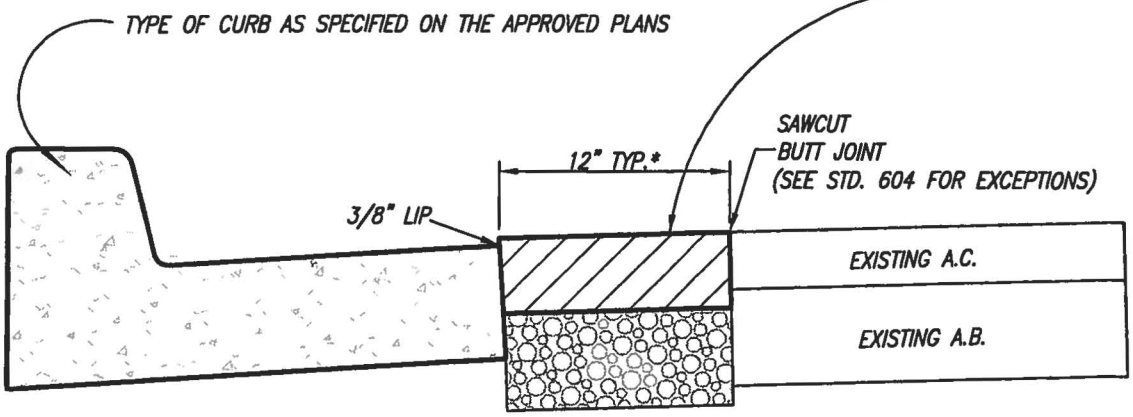

MATCH EXISTING STREET CROSS SLOPE (MINIMUM 1%)

MINIMUM SUBGRADE COMPACTION 95% RELATIVE TO MAX.

SLURRY OR FOG SEAL MAY BE REQUIRED AT THE DISCRETION OF THE CITY ENGINEER OR INSPECTOR.

ALL GUTTER SHALL BE "FLOW TESTED" PRIOR TO PAVING

SEE STANDARD 604 FOR "TRENCH" REPAIR PROCEDURES IF REMOVED ASPHALT AFFECTS THE ESSENTIAL 12 FOOT "DRIVING LANES" RATHER THAN JUST THE "PARKING LANE", OR IF THE SHOULDER AREA IS A "DESIGNATED BIKE ROUTE". AN ADDITIONAL "T CUT", GRINDING, AND OVERLAY WILL BE REQUIRED IN THOSE SITUATIONS.

* OR AS REQUIRED BY THE CITY ENGINEER

CITY OF RANCHO MIRAGE		STANDARD DETAIL 208
REVISIONS	CURB CONSTRUCTION IN EXISTING PAVEMENT	
11/27/2002		
	12/2/02	
	APPROVED BY: CITY ENGINEER DATE	

NOTES

CROSS GUTTER FOR USE WITH TYPES "A" AND "B" CURB

* EXPANSION JOINTS AS SHOWN (SEE STD 206 FOR JOINT DETAILS) ADD REBAR EXPANSION JOINT RESTRAINTS PER PLAN AND DETAIL

APRON THICKNESS TO BE 8" MIN.
CROSS GUTTER THICKNESS TO BE 8" MIN.
CLASS 560-C-3250 CONCRETE
MINIMUM GRADE 0.50%

PLACE 6" CL. 2 AGG. BASE UNDER ENTIRE SPANDREL & CROSS GUTTER AREA

** VARIES DEPENDING ON CURB AND GUTTER AS SPECIFIED

ALL GUTTER SHALL BE "FLOW TESTED" PRIOR TO PAVING

USE CONCRETE CURING COMPOUND, ASTM C309/ AASHTO M148, TYPE 2, CLASS A OR B, WITH WHITE PIGMENT. AFTER CURING, COMPOUND SHALL BE "POWER WASHED" OFF CONCRETE BEFORE ANY CONCRETE PAINTING OR THERMOPLASTIC APPLICATION

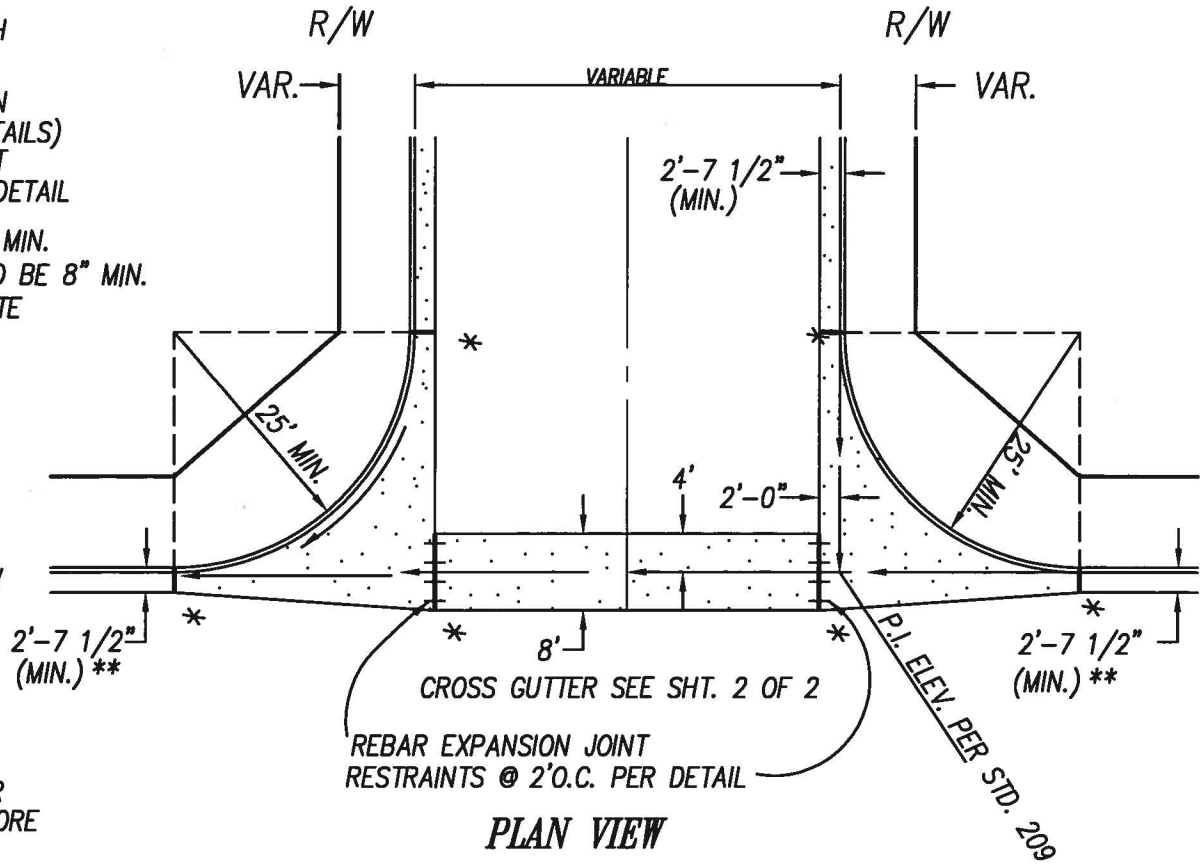

PLAN VIEW

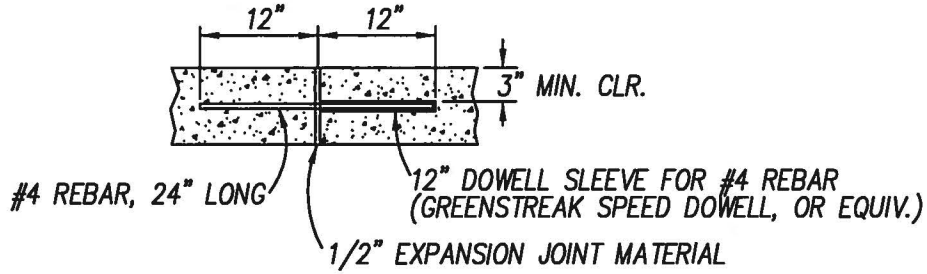

REBAR EXPANSION JOINT RESTRAINT DETAIL

CITY OF RANCHO MIRAGE

CITY OF RANCHO MIRAGE

REVISIONS
* 7/5/2012

SPANDREL/CROSS GUTTER LAYOUT

APPROVED BY: CITY ENGINEER DATE 7/12/12

STANDARD DETAIL 210
SHT. 1 OF 2

CITY OF RANCHO MIRAGE

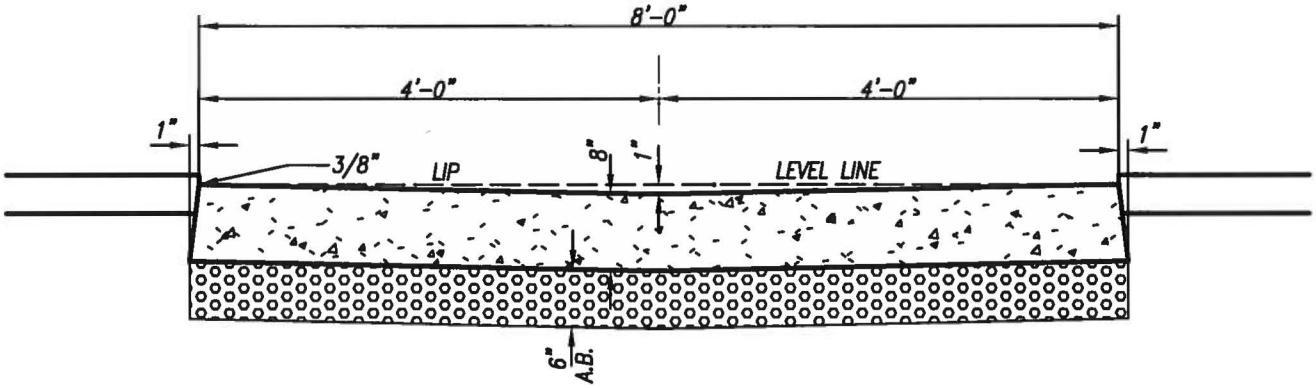

CROSS GUTTER

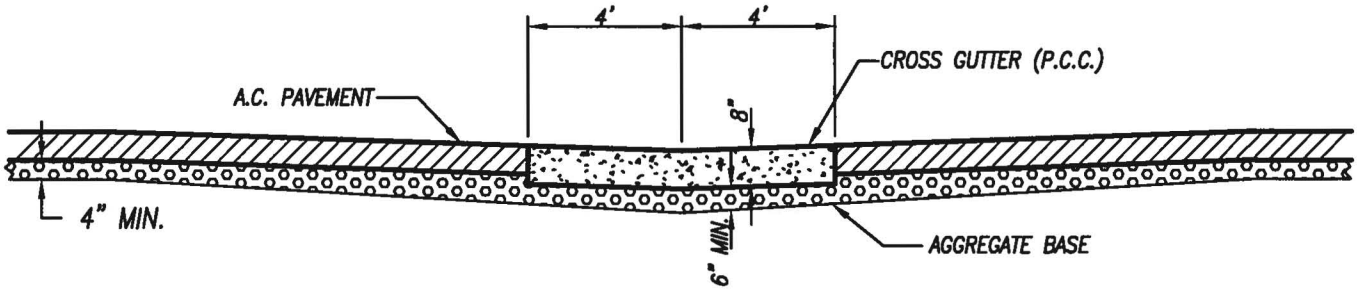

CLASS 560-C-3250 CONCRETE
ALL GUTTER SHALL BE "FLOW TESTED" PRIOR TO PAVING

CITY OF RANCHO MIRAGE		STANDARD DETAIL 210 SHT. 2 OF 2
REVISIONS * 7/5/2012	CROSS GUTTER DETAIL	
	William G. Gates 7/12/12 APPROVED BY: CITY ENGINEER DATE	

CITY OF RANCHO MIRAGE

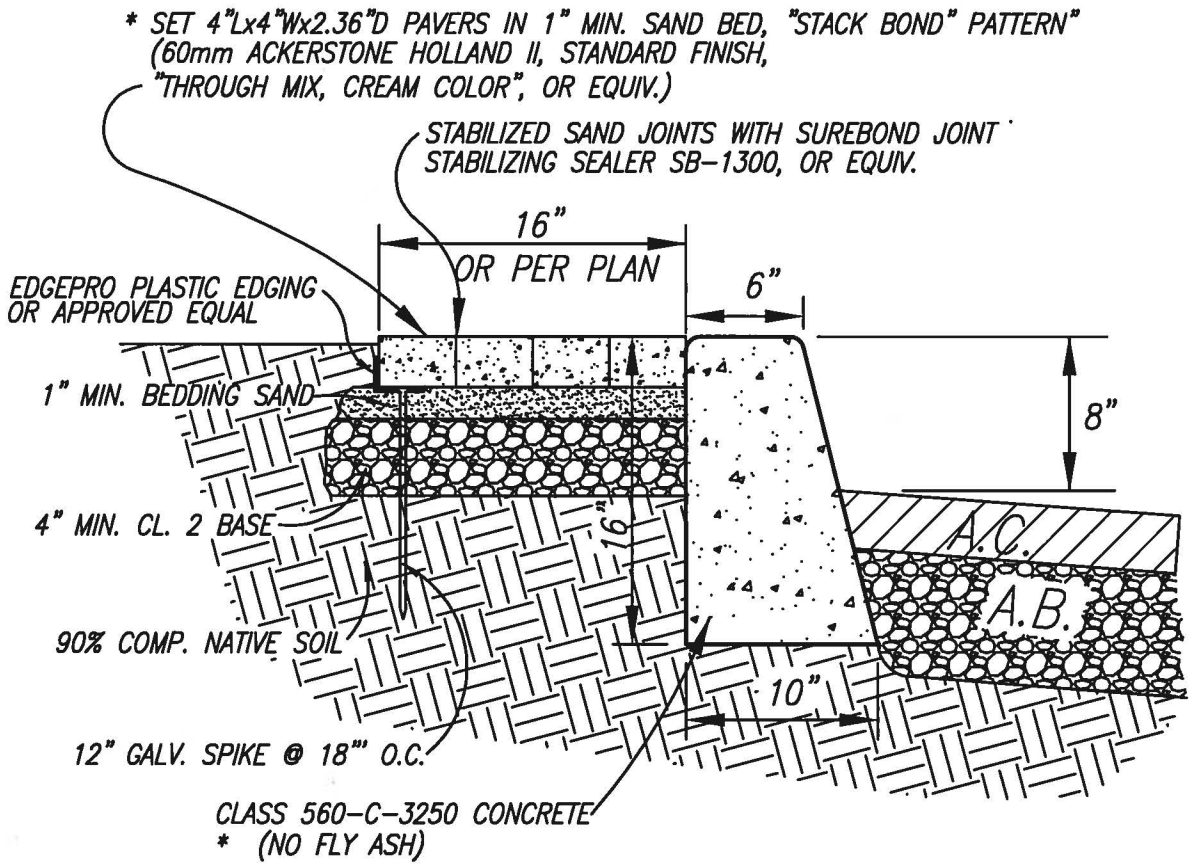

PAVER SECTION DETAIL

CITY OF RANCHO MIRAGE		STANDARD
REVISIONS	MEDIAN PAVER DETAIL	DETAIL 213
07/01/2008		
09/12/2011		
* 7/5/2012	7/12/12	
	APPROVED BY: CITY ENGINEER DATE	SHT. 2 OF 2

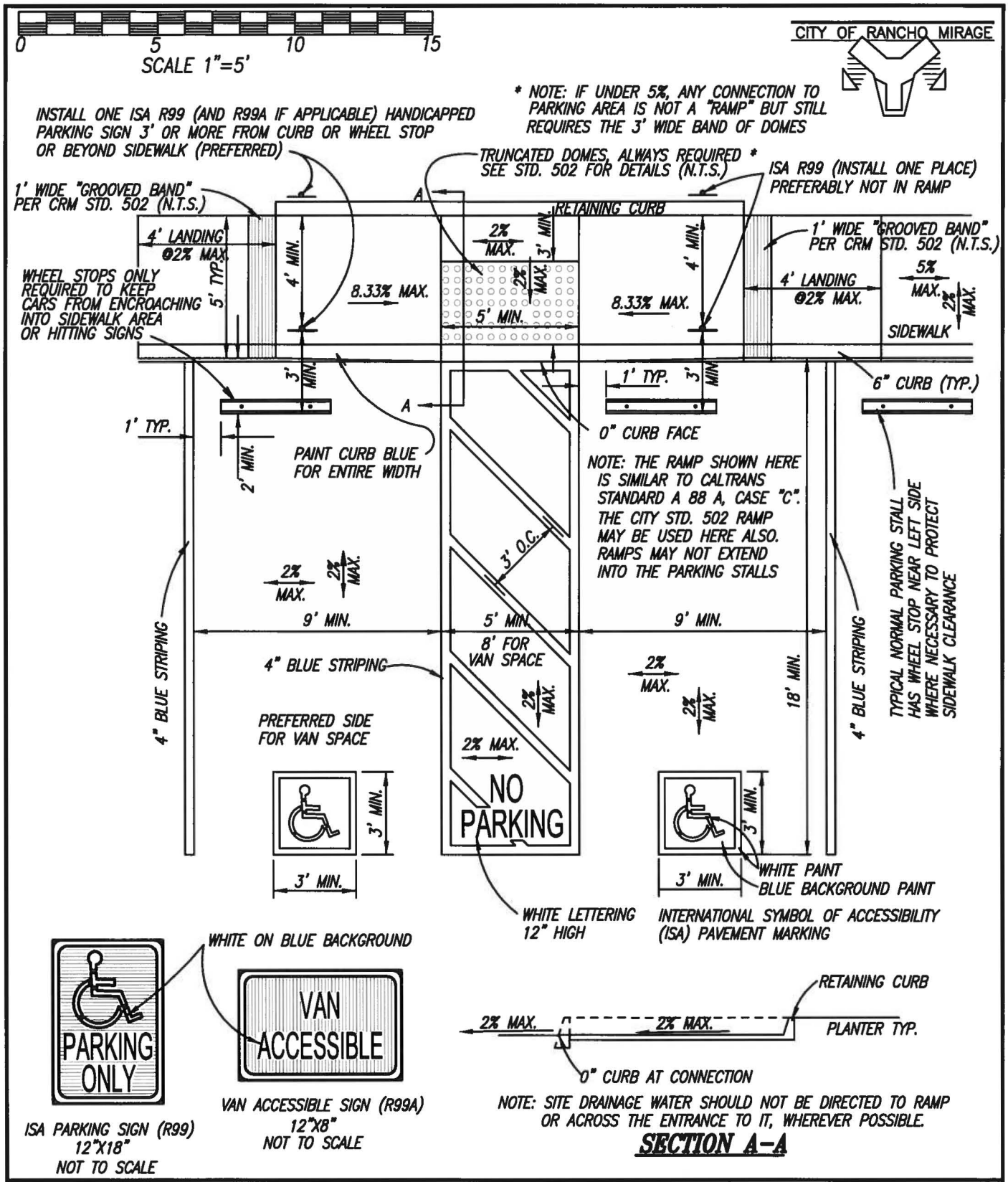

CITY OF RANCHO MIRAGE

REVISIONS
5/1/2003
5/19/2003
1/22/2009

HANDICAP ACCESSIBLE PARKING STALLS (TYP.)

2/11/09

APPROVED BY: CITY ENGINEER DATE

STANDARD DETAIL 214

4' P.C.C. VALLEY GUTTER

CITY OF RANCHO MIRAGE

NOTES

* 1. CLASS 560-C-3250 CONCRETE (NO FLY ASH)
2. 0.5% MIN. FLOWLINE SLOPE
3. ALL GUTTER SHALL BE "FLOW TESTED" PRIOR TO PAVING
4. SEE STANDARD 206 FOR JOINT DETAILS
* 5. USE CONCRETE CURING COMPOUND, ASTM C309/ AASHTO M148, TYPE 2, CLASS A OR B, WITH WHITE PIGMENT. AFTER CURING, COMPOUND SHALL BE "POWER WASHED" OFF CONCRETE BEFORE ANY CONCRETE PAINTING OR THERMOPLASTIC APPLICATION.

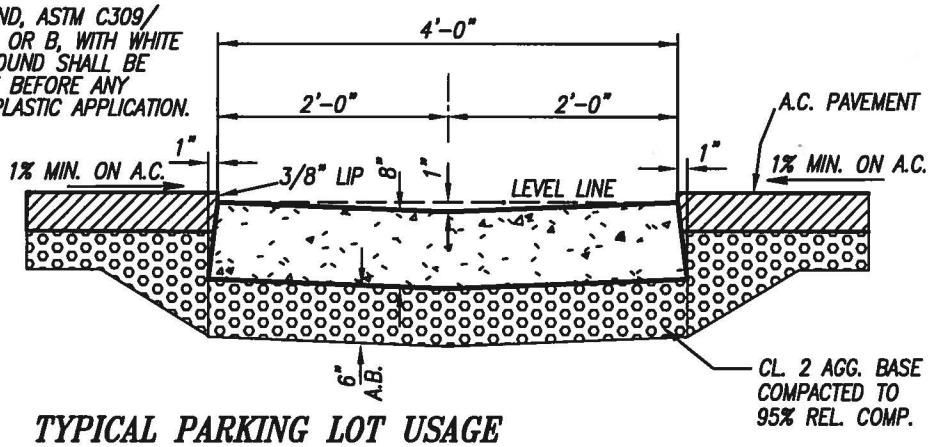

TYPICAL PARKING LOT USAGE

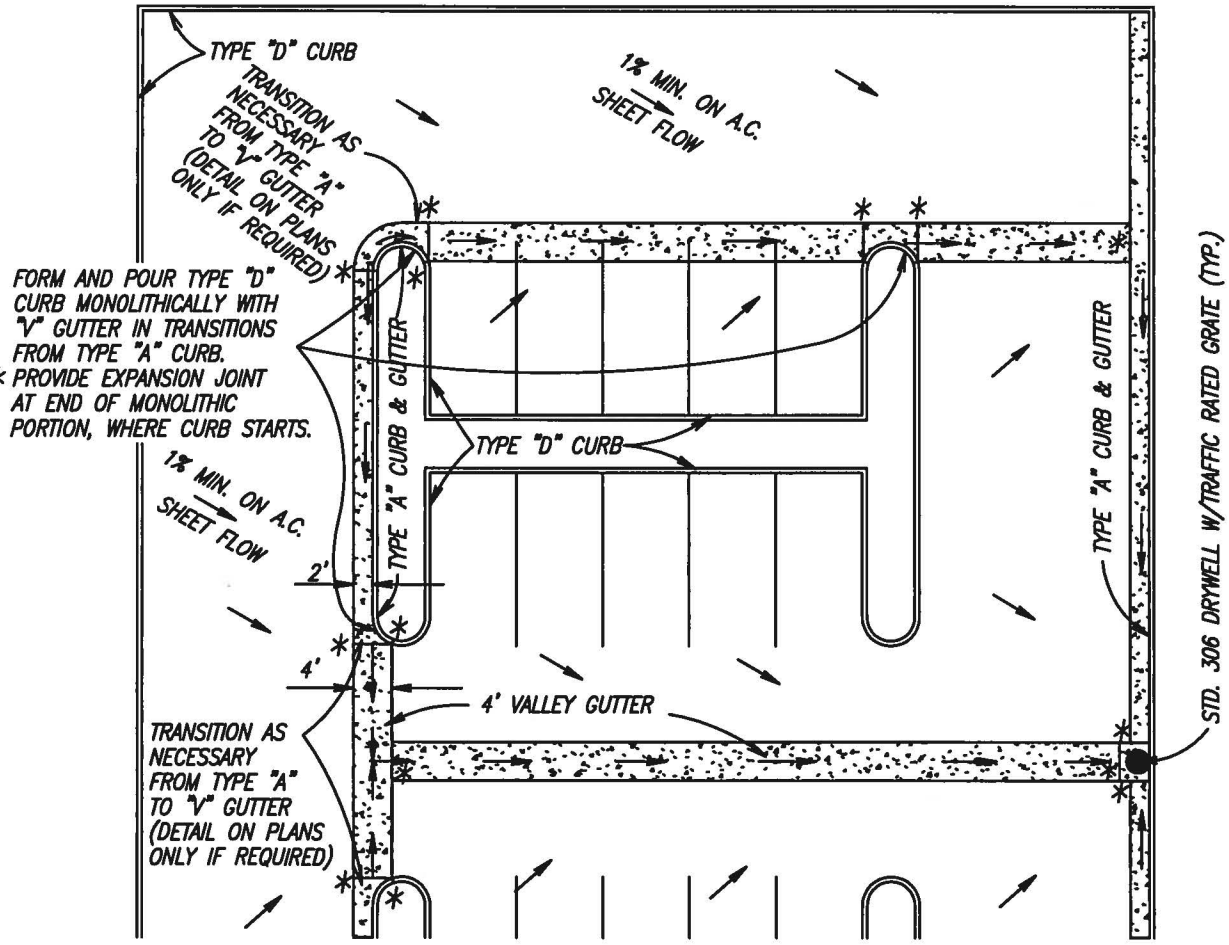

CITY OF RANCHO MIRAGE		STANDARD DETAIL 220
REVISIONS	4' VALLEY ("V") GUTTER	
12/17/2001		
* 7/5/2012		
	7/12/12	
	APPROVED BY: CITY ENGINEER DATE	

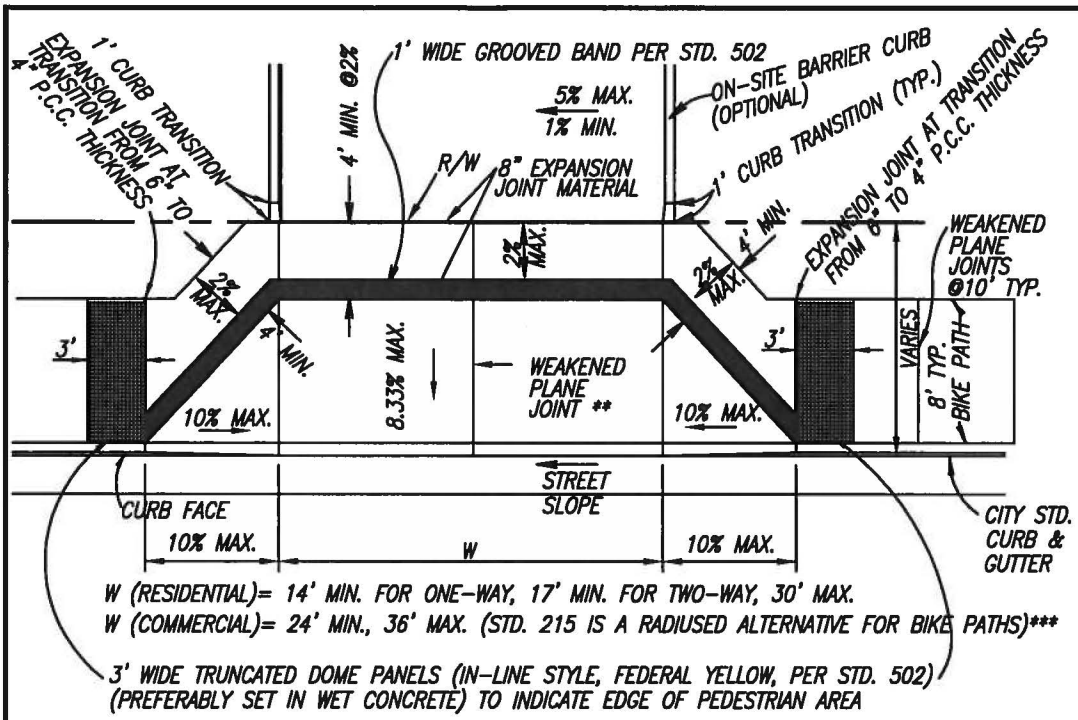

W (RESIDENTIAL)= 14' MIN. FOR ONE-WAY, 17' MIN. FOR TWO-WAY, 30' MAX.
W (COMMERCIAL)= 24' MIN., 36' MAX. (STD. 215 IS A RADIUSED ALTERNATIVE FOR BIKE PATHS)***

3' WIDE TRUNCATED DOME PANELS (IN-LINE STYLE, FEDERAL YELLOW, PER STD. 502) (PREFERABLY SET IN WET CONCRETE) TO INDICATE EDGE OF PEDESTRIAN AREA

CITY OF RANCHO MIRAGE

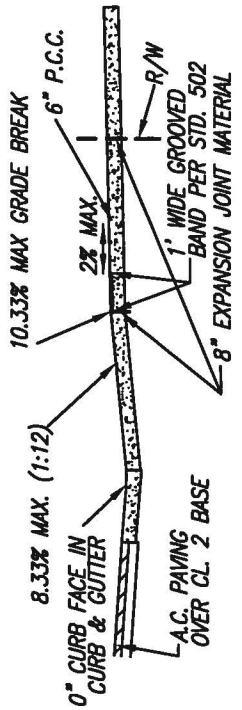

* (1) ALL MATERIAL SHALL BE CLASS 560-C-3250 P.C.C. (NO FLY ASH) OF A SIX INCH THICKNESS. CONCRETE SHALL BE PLACED OVER 95% RELATIVE COMPACTED NATIVE MATERIAL OR BASE.

(2) FOR ALL RESIDENCES, THE MAXIMUM APPROACH WIDTH SHALL BE 30', AT PROPERTY LINE. IF ADDITIONAL WIDTH IS NEEDED AT THE GARAGE, THE DRIVEWAYS WILL HAVE TO BE MADE TO TRANSITION FROM THE 30' MAXIMUM AT PROPERTY LINE, WIDENING NEARER THE GARAGE.

(3) USE OF COLORING ADDITIVES IS ALLOWED PER MUNICIPAL CODE 15.68.050. COLOR APPROVAL BY PLANNING DEPARTMENT WILL BE REQUIRED. ALL DRIVEWAYS, WHETHER COLORED OR NOT, REQUIRE A COVENANT AND ENCROACHMENT PERMIT FOR PLACEMENT IN PUBLIC RIGHT-OF-WAY.

** (4) WEAKENED PLANE JOINTS SHALL BE CONSTRUCTED IN ACCORDANCE WITH SEC. 303-5 OF THE STANDARD SPECIFICATIONS. FOR APPROACH WIDTHS OF 14'-20', ONE JOINT SHALL BE PLACED AT MID-APPROACH. FOR APPROACH WIDTHS OF 20'-30', TWO JOINTS SHALL BE PLACED WITH SYMMETRIC SPACING, WITH A MAXIMUM SPACING OF 10' O.C.

(5) 20' OF FULL FACE CURB IS REQUIRED BETWEEN ANY TWO DRIVEWAY APPROACHES.

* (6) FOR SITES WITHOUT FULL-FACED CURB, THE MAXIMUM SLOPE ALLOWED ON THE APPROACH SHALL BE 8.33%. FOR SITES WITH FULL-FACED CURB, THE APPROACH SHALL AT A MINIMUM SLOPE UPWARDS TO THE TOP OF CURB LEVEL-LINE AND AT A MAXIMUM, THE APPROACH SHALL SLOPE UPWARDS TO THE TOP OF THE CURB LEVEL-LINE PLUS 2%, UNLESS OTHERWISE APPROVED.

* (7) USE CONCRETE CURING COMPOUND, ASTM C309/AASHTO M148, TYPE 2, CLASS A OR B, WITH WHITE PIGMENT. AFTER CURING, COMPOUND SHALL BE "POWER WASHED" OFF CURB TOP AND FACE BEFORE ANY CURB PAINTING

CITY OF RANCHO MIRAGE		STANDARD DETAIL 223
REVISIONS	A.D.A COMPATIBLE DRIVEWAY	
12/04/2002		
06/08/2004		
02/11/2009	7/12/12	
* 7/5/2012	APPROVED BY: CITY ENGINEER DATE	

CITY OF RANCHO MIRAGE

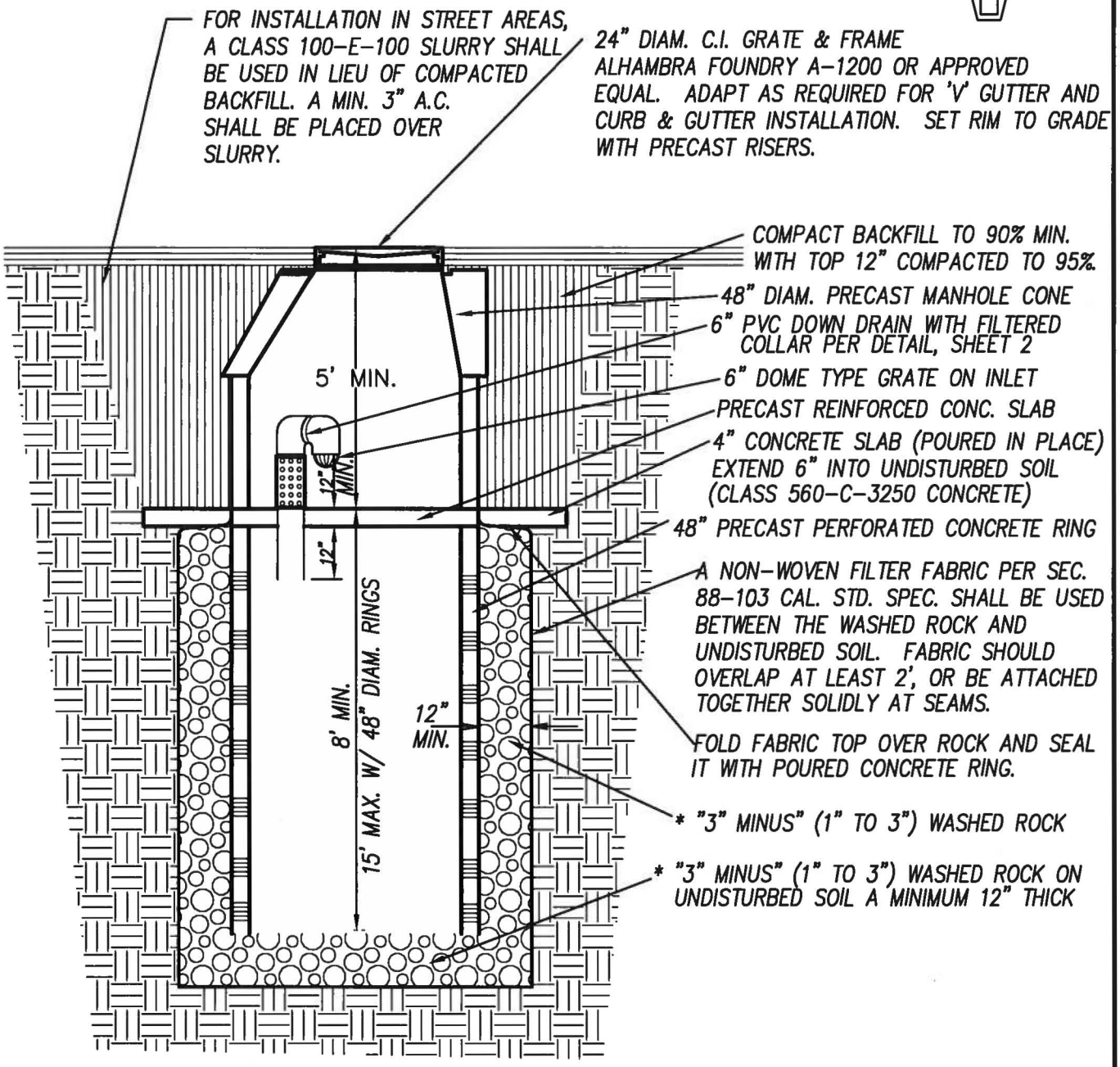

NOTES:

ALL JOINTS ABOVE THE LEACHING AREA SHALL BE MORTAR SEALED INSIDE AND OUT.
MAX. PERCOLATION RATE = 1"/HR, OR HALF OF AN ENGINEERED PERCOLATION TEST UP TO 5"/HR. MAX.
THE SURFACE AREA FOR PERCOLATION MAY BE THE OUTSIDE AREA OF THE GRAVEL (6.5' DIAM. TYP.)
THE HIGHEST RUNOFF FROM A 100 YEAR FREQUENCY STORM, NO MATTER WHAT TIME LENGTH, SHALL BE UTILIZED WHEN CALCULATING THE STORAGE CAPACITY NEEDED IN A DRYWELL.

CITY OF RANCHO MIRAGE		STANDARD DETAIL
REVISIONS	DRYWELL DETAIL	306
* 7/5/2012		
	7/12/12 APPROVED BY: CITY ENGINEER DATE	SHEET 1 OF 2

CITY OF RANCHO MIRAGE

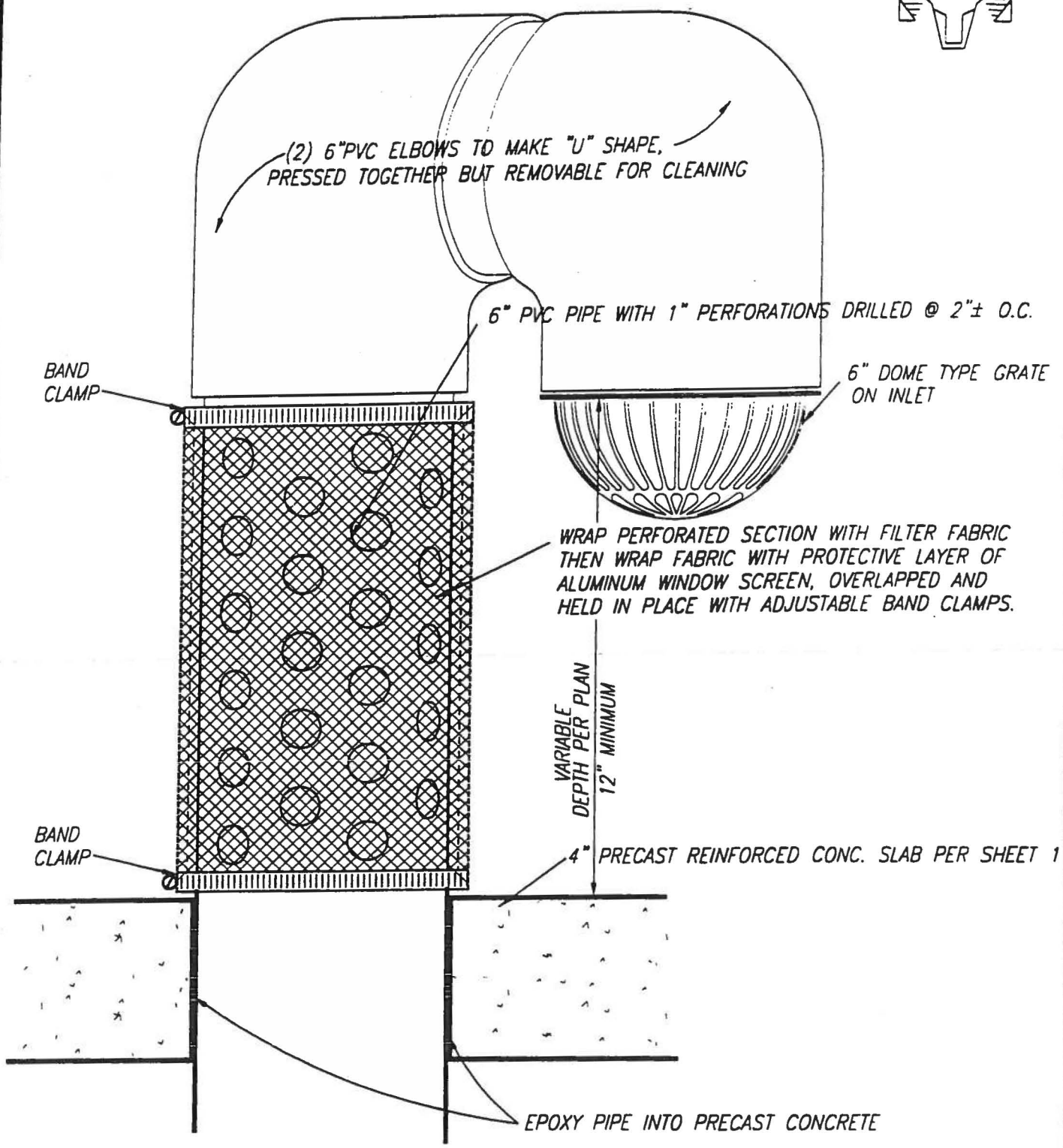

CITY OF RANCHO MIRAGE		STANDARD DETAIL 306 SHEET 2 OF 2
REVISIONS	FILTERED COLLAR FOR STANDARD DRYWELL	
	5/31/01	
	APPROVED BY: CITY ENGINEER DATE	

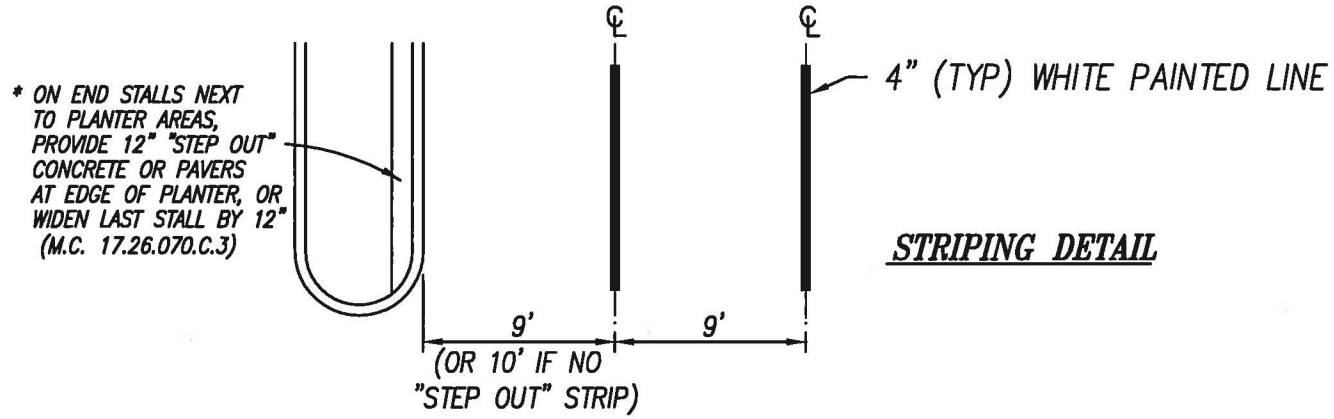

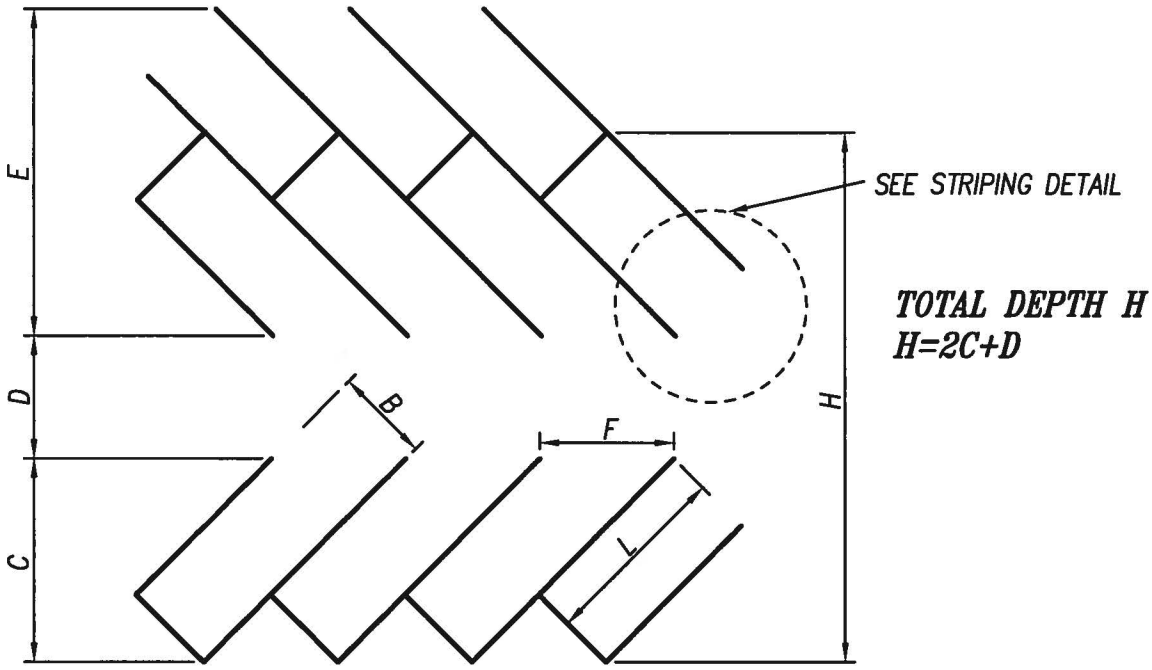

ANGLE	WIDTH B	DEPTH C	AISLE WIDTHS D 1-WAY	AISLE WIDTHS D 2-WAY	LENGTH L	E	F
PARALLEL	9'	9'	12'	20'	24'	18'	–
30°	9'	16.79'	14'	20'	18'	25.79'	18'
45°	9'	19.09'	14.5'	20'	18'	31.82'	12.73'
60°	9'	20.09'	17'	20'	18'	35.68'	10.39'
90°	9'	18'	24'	24'	18'	36'	9'

REFER TO CITY ZONING CODE, CHAPTER 17.26, FOR DETAILS

CITY OF RANCHO MIRAGE

REVISIONS

08/04/2005

* 7/5/2012

PARKING STALL DIMENSIONS

7/12/12

APPROVED BY: CITY ENGINEER DATE

STANDARD DETAIL

408

CITY OF RANCHO MIRAGE

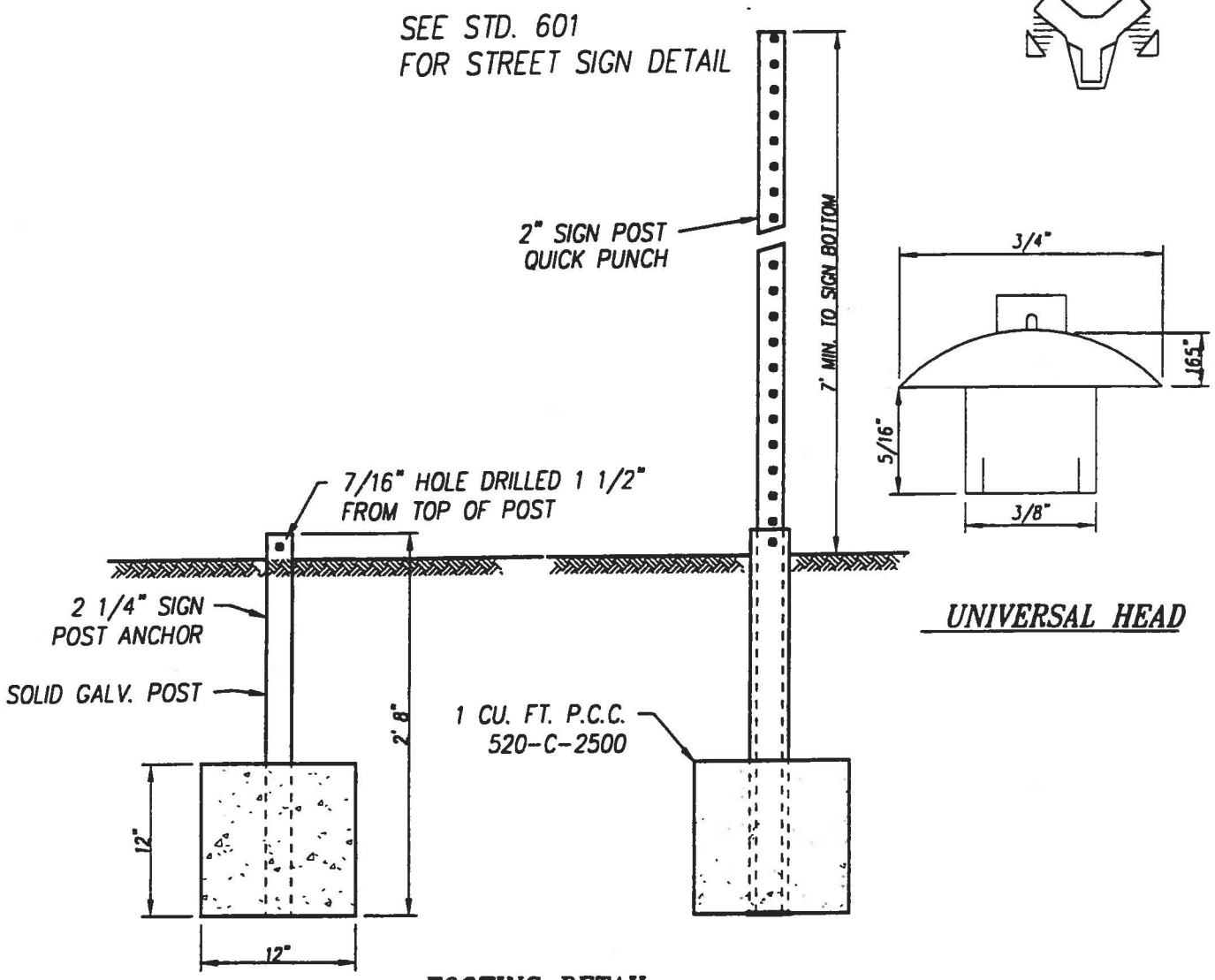

1. Place sign post anchor into ground approximately 2'-6" depending on local soil conditions. Drill one 7-16" hole approximately 1 1/2" from the top of the anchor post.

2. Insert sign post and rivet in place with two 3\8" Universal Head Drive Rivets, one placed facing traffic and one perpendicular to traffic.

3. All posts to be electrostatically powder coated with City approved brown coating.

CITY OF RANCHO MIRAGE		STANDARD DETAIL 602
REVISIONS	SIGN POST INSTALLATION	
	5/31/01 APPROVED BY: CITY ENGINEER DATE	

CITY OF RANCHO MIRAGE

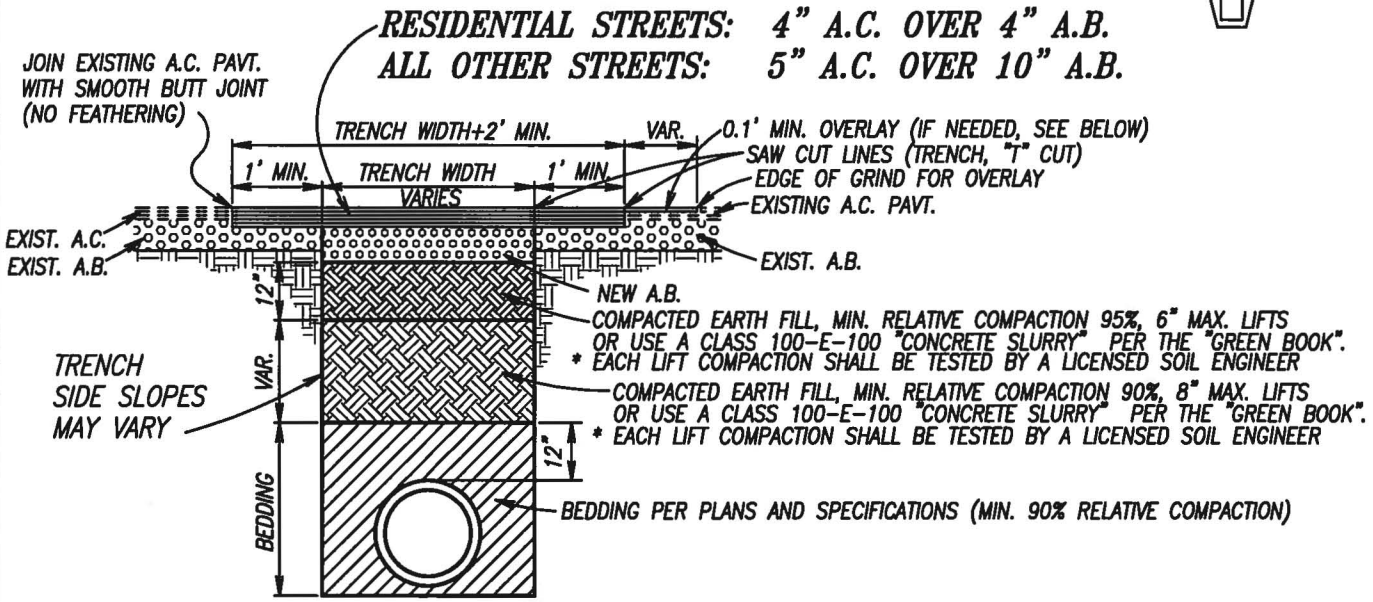

"T-TRENCH" DETAIL

NOT TO SCALE

TRANSVERSE TRENCH CUTS

0" TO 12" WIDE – REPAIR TRENCH WIDTH ONLY (NO "T-TRENCH")
12" TO 24" WIDE – REPAIR TRENCH WIDTH PLUS ADDITIONAL 1' "T" ON BOTH SIDES
>24" WIDE – REPAIR TRENCH WIDTH PLUS ADDITIONAL 1' "T" ON BOTH SIDES PLUS GRIND/OVERLAY 0.1' MIN. THICK FOR AN ADDITIONAL 3' ON BOTH SIDES.

LONGITUDINAL TRENCH CUTS IN DRIVING LANES

0" TO 12" WIDE – REPAIR TRENCH WIDTH ONLY (NO "T-TRENCH") PLUS 0.1 GRIND AND OVERLAY FROM FROM LANE LINE TO LANE LINE
12" TO 24" WIDE – REPAIR TRENCH WIDTH PLUS ADDITIONAL 1' "T" ON BOTH SIDES PLUS 0.1' GRIND/OVERLAY FROM LANE LINE TO LANE LINE
>24" WIDE – REPAIR TRENCH WIDTH PLUS ADDITIONAL 1' "T" ON BOTH SIDES PLUS GRIND/OVERLAY 0.1' MIN. FROM LANE LINE TO LANE LINE.

SHOULDER TRENCH CUTS

AT EDGE OF GUTTER – REPAIR TRENCH WIDTH ONLY (NO "T-TRENCH")
* OFF EDGE OF GUTTER – NO LESS THAN 4' "FLOATER" BETWEEN TRENCH AND GUTTER SLURRY OR FOG SEAL MAY BE REQUIRED UNLESS THE ROADWAY IS A DESIGNATED BIKE ROUTE, WHICH WOULD REQUIRE A 0.1' THICK GRIND/OVERLAY FROM EDGE OF GUTTER TO LANE LINE.

CITY OF RANCHO MIRAGE		STANDARD DETAIL 604
REVISIONS	UTILITY TRENCH PAVEMENT REPLACEMENT	
* 7/5/2012		
	7/12/12	
	APPROVED BY: CITY ENGINEER DATE	

CITY OF RANCHO MIRAGE

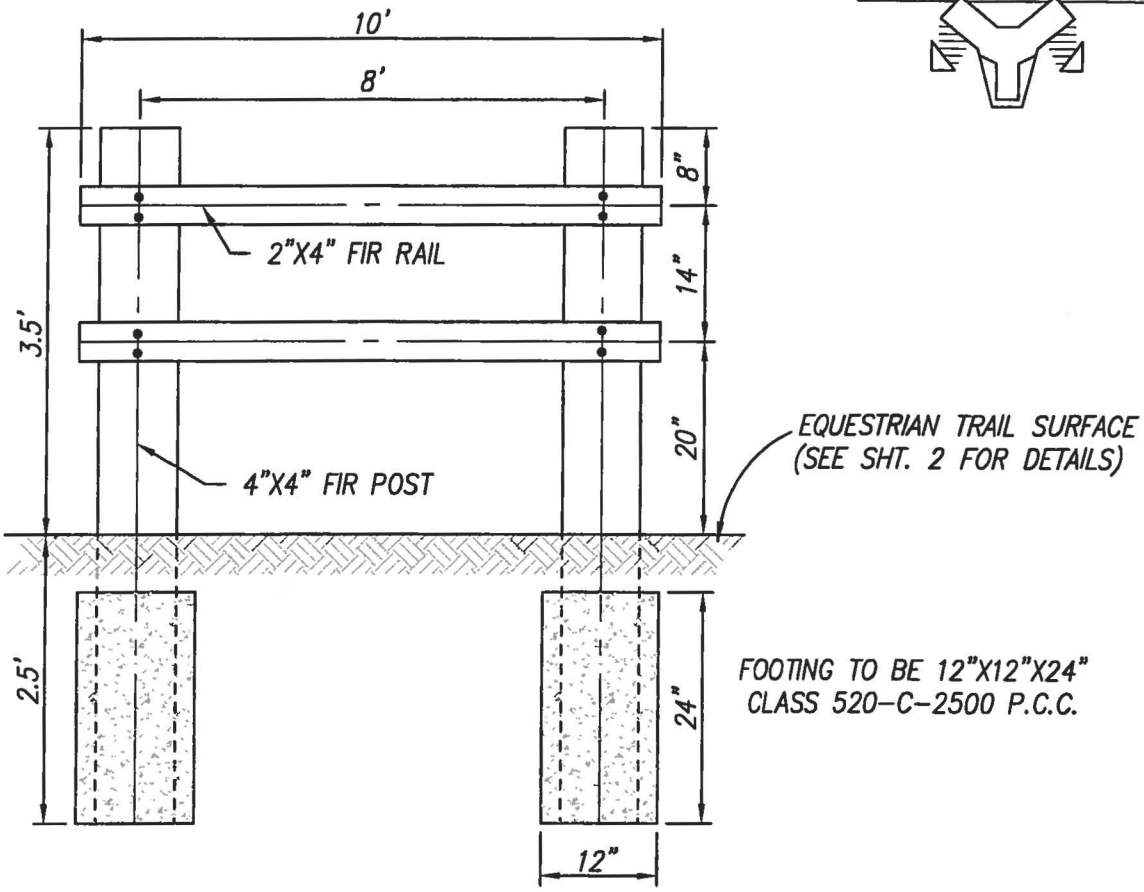

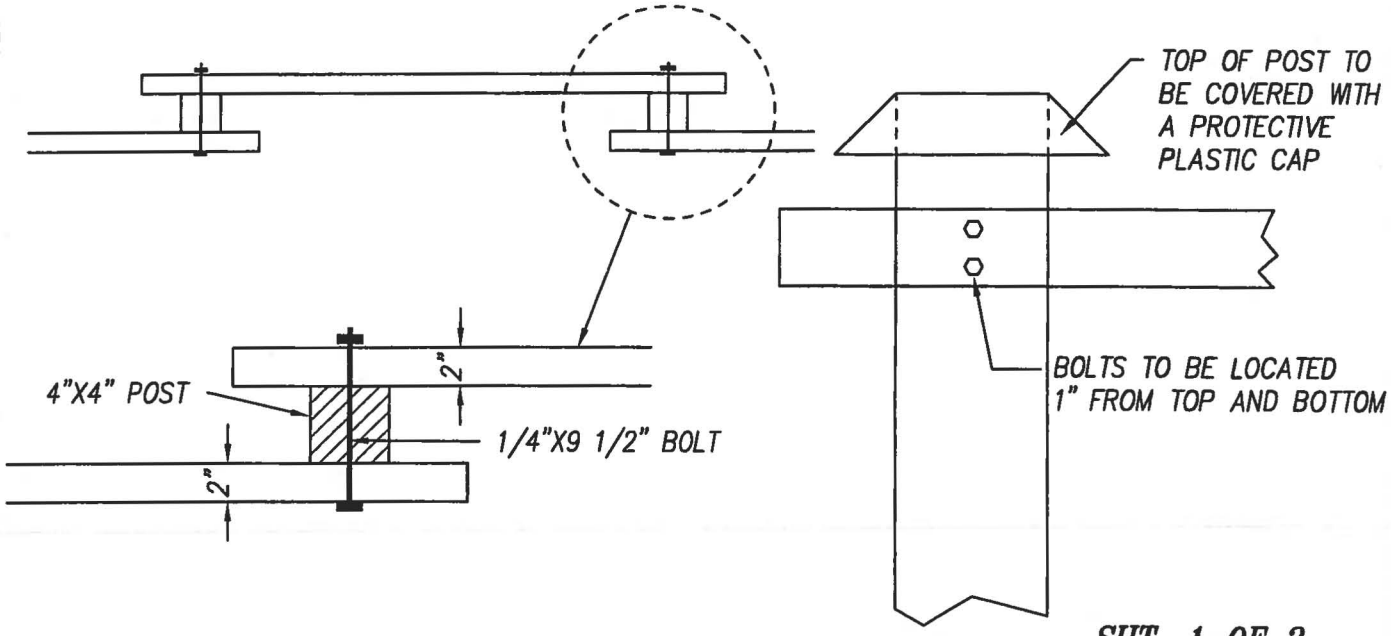

SHT. 1 OF 2

CITY OF RANCHO MIRAGE		STANDARD DETAIL 615
REVISIONS 12/04/2002	**EQUESTRIAN TRAIL FENCE DETAILS**	
	12/6/02 APPROVED BY: CITY ENGINEER DATE	

CITY OF RANCHO MIRAGE

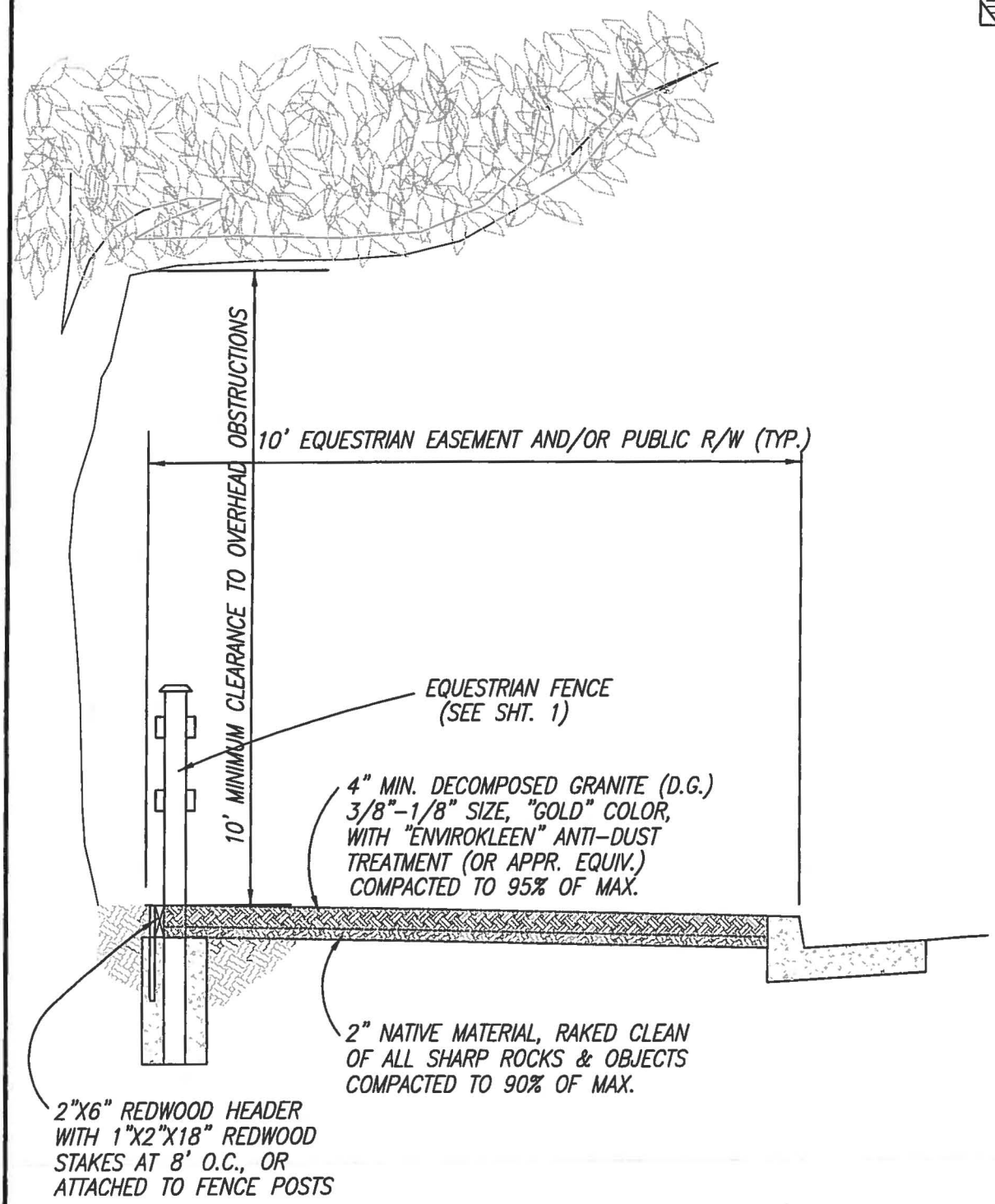

SHT. 2 OF 2

CITY OF RANCHO MIRAGE		STANDARD DETAIL 615
REVISIONS 12/04/2002	**EQUESTRIAN TRAIL TRAIL DETAILS**	
	12/6/02 APPROVED BY: CITY ENGINEER DATE	

File: 0031.7

COACHELLA VALLEY

WATER DISTRICT

P.O. BOX 1058
Coachella, California

STANDARD SPECIFICATIONS FOR THE CONSTRUCTION OF

SANITARY SEWER SYSTEMS

OCTOBER 21, 2005

COACHELLA VALLEY WATER DISTRICT
POST OFFICE BOX 1058
COACHELLA, CALIFORNIA 92236

STANDARD SPECIFICATIONS FOR THE CONSTRUCTION OF SANITARY SEWER SYSTEMS

ENGINEERING DEPARTMENT
OCTOBER 2005

Prepared by
Engineering Department
Sanitation Division

Submitted by: _____
Bruce Clark
Principal Sanitation Engineer

Reviewed by: _____
Mark L. Johnson
Director of Engineering

Approved by: _____
for Steve Robbins
General Manager-Chief Engineer

OCTOBER 2005

REGISTERED PROFESSIONAL ENGINEER
MARK DEAN BEUHLER
No. 31460
Exp. 12/31/06
CIVIL
STATE OF CALIFORNIA

COACHELLA VALLEY WATER DISTRICT

STANDARD SPECIFICATIONS FOR THE CONSTRUCTION OF SANITARY SEWER SYSTEMS

TABLE OF CONTENTS

			PAGE
PART I	-	INTRODUCTION	I-1
PART II	-	TECHNICAL CONDITIONS	
		SECTION	
		TC-1 ENCROACHMENT PERMITS	II-1-1
		TC-2 PIPE AND APPURTENANCES	II-2-1
		TC-3 VALVES AND VALVE OPERTOR WELLS	II-3-1
		TC-4 AIR AND VACUUM RELIEF ASSEMBLIES	II-4-1
		TC-5 CONCRETE VAULTS	II-5-1
		TC-6 THRUST DEVICES	II-6-1
		TC-7 MANHOLES	II-7-1
		TC-8 HOUSE LETERALS	II-8-1
		TC-9 WET WELL, VAULTS AND MANHOLE LINING	II-9-1
		TC-10 FIELD APPLICATION OF PROTECTIVE COATINGS	II-10-1
		TC-11 CARSONITE UTILITY MARKER	II-11-1
		TC-12 SLOPE PROTECTION	II-12-1
		TC-13 CLEAN-OUTS	II-13-1
		TC-14 TELEVISION INPECTION	II-14-1
		TC-15 EPOXY COATING AND LINING	II-15-1
		TC-16 MID-RANGE PIPE LOCATORS	II-16-1
		TC-17 PAINTING	II-17-1
PART III	-	SPECIAL PROVISIONS	
PART IV	-	DETAIL DRAWINGS	IV-1

COACHELLA VALLEY WATER DISTRICT

STANDARD SPECIFICATIONS FOR THE CONSTRUCTION OF SANITARY SEWER SYSTEMS

PART I - INTRODUCTION

The construction of sanitary sewer systems subject to inspection and approval by the Coachella Valley Water District shall be in accordance with the requirements of the District's Standard Specifications for the Construction of Sanitary Sewer Systems hereinafter referred to as the Standard Specifications. Items not specifically referred to herein shall comply with the latest edition of the Standards of the American Water Works Association and/or Greenbook Standard Specifications and shall be subject to approval by the District. Construction methods, material and disposal of products shall also be subject to current standards established by South Coast Air Quality Management District, Regional Water Quality Control Board and any other local, state or federal agencies having authority in their respective jurisdiction.

The Standard Specifications shall include the following:

1. PART II - TECHNICAL CONDITIONS.

2. The latest edition of the "Standard Specifications for Public Works Construction" (SSPWC) written and promulgated by the Southern California Chapter of the American Public Works Association and the Southern California Districts of the Associated General Contractors of America, complete with latest supplements thereto except as modified in PART III, AMENDMENTS TO THE STANDARD SPECIFICATIONS FOR PUBLIC WORKS CONSTRUCTION, and/or as modified or supplemented by PART II, TECHNICAL CONDITIONS.

3. PART III, AMENDMENTS TO THE STANDARD SPECIFICATIONS FOR PUBLIC WORKS CONSTRUCTION.

4. Coachella Valley Water District detail drawings as follows:

Drawing No.	Title
S-1A	Manhole Collar in Light Traffic Areas
S-1B	Manhole Collar in Heavy Traffic Areas
S-2	Concrete Cradle
S-3	Separation and Construction Requirements for Sewer and Water Lines (Parallel Construction)
S-4	Separation and Construction Requirements for Sewer and Water Lines (Crossings)
S-5	Reinforced Precast Concrete Manhole
S-6	Standard Clean-out
S-7	Trench Backfill Details
S-8A	Reinforced Precast Concrete Drop Manhole (Eccentric)
S-8B	Service Lateral Drop Manhole (For Sewers Over 20-feet Deep)
S-9A	Standard House Lateral Type "A"
S-9B	Standard House Lateral Type "B"
S-9C	Standard House Lateral Type "C"

Drawing No.	Title
S-10A	Manhole Frame and Cover Type "A"
S-10B	Manhole Frame and Cover Type "B"
S-19	Detail of Concrete Thrust Blocks
S-20	Thrust Block Bearing Areas
S-24	Chimney Pipe and Base
S-26	Detail of Slope Protection
S-36	Detail of Valve Operator Well Installation
S-37	Detail of Valve Operator Well Cap and Frame
S-39	Detail of Carsonite Utility Marker
S-40A	Detail of Offset Sewage Force Main Air Release and Air/Vac Assembly
S-40B	Detail of Air Release and Air/Vac Assembly Discharge
S-41	Detail of Cathodic Protection Test Station - Improved Areas
S-42	Detail of Cathodic Protection Test Station - Unimproved Areas
S-43	General Location of Sewer Lateral and Water Meter/Water Service Installation
S-44	Standard Offset Clean-out Detail for Lateral under Driveway with no Sidewalk
S-45	Standard Offset Clean-out Detail for Lateral under Driveway with Sidewalk
S-46	Construction Detail for Structural Encasement of Sewer

These Standard Specifications are for the purpose of defining the requirements for construction and as such do not constitute a definition of the contractual arrangement between Subdivider, Contractor and the District. Therefore, references to measurements and payment and other contractual, nontechnical requirements are not binding on the parties unless specifically referenced.

COACHELLA VALLEY WATER DISTRICT

STANDARD SPECIFICATIONS FOR CONSTRUCTION OF
SANITARY SEWER SYSTEMS

PART II - TECHNICAL CONDITIONS

TC-1 ENCROACHMENT PERMITS

If required, encroachment permits for the construction of the sanitary sewer system shall be obtained from the appropriate governmental agency, by the Developer or Contractor at the Developer's or Contractor's expense, prior to construction. In the event of conflict between the requirements of these Specifications and the requirements of the permits, the requirements of the permits shall govern.

TC-2 PIPING AND APPURTENANCES

2.1 General

This Article covers furnishing and delivering of all pipeline materials necessary to complete the sanitary sewer installation in conformance with the Specifications. The gravity sewer shall be constructed of vitrified clay pipe (VCP). All materials to be installed shall be new and unused.

2.2 Vitrified Clay Pipe

2.2.1 General

Vitrified clay pipe and fittings shall be extra strength and shall conform in every respect with the requirements of the specifications and standards of the Clay Pipe Institute and Sections 207-8 of the "Standard Specifications for Public Works Construction," latest edition, for the size of pipe indicated upon the plans. Vitrified clay pipe shall be of the best quality, vitrified, homogeneous in structure, thoroughly burned throughout the entire thickness, free from cracks or other imperfections and must give a clear metallic ring when struck with a hammer.

2.2.2 Joints

Joints in vitrified clay pipe shall be made using a factory-made mechanical compression joint, consisting of a plastic material (Polyurethane), and shall be "Wedgelock" or "Speed-Seal," or approved equal, and shall conform with the requirements of Section 208.2.3, Type "G" Joints of the "Standard Specifications for Public Works Construction," latest edition.

2.3 Submittals

The Contractor shall submit, in quadruplicate, the drawings of pipe, joints, fittings and other equipment, it may be the brochure or catalog sheets of manufacturer, showing, in sufficient details, the dimensions and manufacturer's tolerances of working pressures.

The Contractor shall also obtain and submit to the District the Manufacturer's Affidavit of Compliance that all basic materials used in VCP production meet the requirements of the standards of this Specification.

2.4 Inspection

2.4.1 General

Inspection by the District shall not relieve the manufacturer of the responsibility of furnishing products that satisfy requirements defined in this standard.

2.4.2 Access

The Inspector shall have free access to that part of the manufacturer's plant involved in work performed to meet requirements of this standard. The manufacturer shall afford the inspector, at no charge, reasonable facilities needed to determine if the pipe meets the requirements of this standard.

2.4.3 Certification

The manufacturer shall furnish a certificate of conformance to this standard.

2.5 Installation

2.5.1 General

All pipe laying shall proceed upgrade with the spigot ends of bell and spigot pipe pointing in the direction of flow. Each pipe shall be laid true to line and grade. No pipe shall be lain in water and all costs for drainage and/or dewatering trenches during construction shall be borne by the Contractor.

Unless specified otherwise, all buried piping shall have a coverage of at least three feet between top of pipe and finished grade. Pipe shall be assembled by hand or by use of a bar and block or by lever pullers. No swinging or stabbing shall be permitted. The "popping-on" of joints is expressly forbidden. All bell and spigot type connection shall be marked on the spigot end to indicate full insertion.

Installation of pipe shall be in accordance with SSPWC 306-1 as amended by Article SP-3 of PART IX, SPECIAL PROVISIONS. Maximum length of trench shall be in accordance with SSPWC 306-1.1.2.

Where unsuitable material is found at the trench bottom, as determined by the Engineer, the unsuitable material shall be removed and replaced by crushed rock as defined by SSPWC 200-2.2 or 200-2.3 except that minimum sand equivalent value shall be 30. Any excess material that is generated by this process shall be disposed of by the Contractor at no additional cost to the District.

2.6 Testing

2.6.1 General

All testing shall be in accordance with SSPWC 306-1.4.4.

2.6.2 Television Inspection

For television requirement, see TC-14, TELEVISION INSPECTION, of this Specification.

TC-3 VALVES AND VALVE OPERATOR WELLS

3.1 Scope

This Article covers furnishing all materials and equipment and performing all operations necessary to furnish, install and test the valves and valve operator wells.

3.2 Materials

3.2.1 Eccentric Plug Valves

3.2.1.1 General

Plug valves shall be of the nonlubricated, eccentric type with resilient faced plugs and shall be furnished with either flanged ends conforming to the ANSI 125/150 lb. standard, with appropriate adapters, or mechanical joint ends in accordance with AWWA C111.

Valve bodies shall be of ASTM A126 Class B cast-iron in compliance with AWWA C507 Section 5.1 and AWWA C504 Section 6.4. Exposed nuts, bolts, springs, washers, etc., shall be of 316 stainless steel. Resilient plug facings shall be of neoprene, suitable for use with wastewater and sludge flow or Nitrile-Butadiene (Hycar) for low pressure air application.

Valves shall be furnished with corrosion resistant seats which shall be in accordance with AWWA C507, Section 7.2 and with AWWA C504, Section 9, Paragraph 9.4.

Valves shall be furnished with replaceable, sleeve-type bearings in the upper and lower journals. These bearings shall be in accordance with AWWA C507 Section 8, Paragraphs 8.1, 8.3 and 8.5, and with AWWA C504 Section 11.

Valves shall be capable of providing drip-tight shutoff up to the full valve rating with pressure in either direction.

3.2.1.2 Manufacturer

Three-inch to 72-inch plug valves shall be eccentric plug valves as manufactured by Dezurik "series 100" or approved equal.

3.2.1.3 Operator

Valves shall be furnished with a worm gear operator with a 2-inch square actuating nut. Valves shall have Type 304 stainless steel bolting.

3.2.1.4 Pressure Rating

Valve pressure rating shall be as follows and shall be established by hydrostatic tests as specified by ANSI B16. Pressure rating shall be 175 psi for valves through 12 inches, 150 psi for valves in sizes 42 through 54 inches. Valves shall provide a drip-tight shutoff up to the full pressure rating. Valves shall be capable of providing drip-tight shutoff up to the full valve with pressure in either direction.

3.2.2 Valve Operator Wells

Valve operator wells for valves shall consist of 8-inch diameter, C-900 PVC pipe, as shown on Detail Drawing No. S-36. Valve operator wells shall be equipped with a cast iron frame with concrete and cast iron lid, marked, as shown on Detail Drawing No. S-37. The caps shall be painted OSHA green for sewer service and Irvine purple for use in reclaimed water service.

3.3 Installation

3.3.1 Valves

Valves shall be installed in accordance with manufacturer's recommendations and these Specifications. Thrust devices shall be installed in accordance with Article TC-6 THRUST DEVICES.

3.3.2 Valve Operator Wells

Valve operator wells shall be installed in accordance with Detail Drawing No. S-36. The caps and upper valve operator well sections shall be placed after the surrounding street surface has been laid.

3.3.3 Valve Operator Nut Extensions

Valve operator nut extensions shall be installed where necessary to maintain the depth below finish grade to the operator nut to no more than three and one half feet. The design of the extension shall be such to ensure the centering of the operator nut within the valve operator well.

TC-4 AIR AND VACUUM RELIEF ASSEMBLIES

4.1 Scope

This Article covers furnishing all materials and equipment and performing all operations necessary to furnish, install and test the air and vacuum relief valve assemblies as indicated in Detail Drawing Nos. S-40A and S-40B.

4.2 Materials

4.2.1 Air and Vacuum Relief Valves

Valve to be stainless steel VENT-O MAT 050RGX1021 with top outlet or A.R.I. D-020, or approved equal, sewage combination air valve with attachments. The manufacturer shall certify the venting capacity and provide installation and maintenance manuals with each air and vacuum relief assembly. The size of the air and vacuum relief assemblies shall be as specified on the Plans or as directed by the Engineer.

4.2.2 Additional Material

Additional material including valve operator wells shall be in accordance with Article TC-3, VALVES AND VALVE OPERATOR WELLS.

4.3 Installation

4.3.1 General

Air and vacuum relief assemblies shall be installed at all high points on a main, where indicated on the Plans, or where directed by the Engineer.

4.3.2 Connections to the Main

Connections to the main shall be at the top of the main in accordance with Detail Drawing No. S-40A.

4.3.3 Service Line

The service shall slope continuously upward from the main to the air and vacuum relief assembly.

4.3.4 Air and Vacuum Relief Assembly

The air and vacuum relief assembly shall be installed in accordance with Detail Drawing Nos. S-40A and S-40B. The Contractor shall install items necessary for the assembled unit to assure its ability to function as intended.

Assembly shall incorporate a flushing valve tap.

4.3.5 Excavation, Bedding and Backfill

Excavation, bedding and backfill for air and vacuum relief assembly service lines shall be in accordance with these Specifications.

4.4 Field Tests

After completion of the installation of air and vacuum relief valve assemblies and before acceptance thereof, the Contractor shall perform such tests as may be necessary to assure proper functioning of components. Defects disclosed by such testing shall be repaired to the satisfaction of the Engineer. Air and vacuum relief valve assemblies shall only be subject to pressure testing at normal operating line pressure.

TC-5 CONCRETE VAULTS

5.1 Scope

This Article covers furnishing and installing concrete vaults.

5.2 Materials

Concrete vaults shall be manufactured by Brooks Series 500 Quickset or equal. The vault shall be topped with two H20 load graded galvanized steel covers with lifting devices or as approved by the engineer.

5.3 Installation

5.3.1 General

Concrete vaults shall be installed where indicated on the Plans, as close to the right-of-way line as possible, or as directed by the Engineer.

5.3.2 Excavation, Bedding and Backfill

Excavation, bedding and backfill for concrete vaults shall be in accordance with these Specifications.

5.3.3 Concrete Vault

The Contractor shall prepare an excavation large enough to accommodate the outside dimensions of the vault as shown on the drawings. Prior to setting, the Contractor shall provide a minimum of 16 inches of 3/4-inch crushed rock in accordance with Detail Drawing No. S-40A to receive the vault. The base shall be compacted and graded level and at proper elevation to receive the vault in relation to the conduit grade or ground cover requirements as designated in the Plans. Sealants used between the joints of the vault sections are at the Contractor's discretion, unless otherwise specified. If grout is used, it should consist of two parts plaster sand to one part cement with sufficient water added to make the grout flow under its own weight. The grout should be poured into a water soaked groove, and filled to the top of groove in the previously set section. If mastic joint compound is used, it should be placed at the bottom of the groove unless a double amount is to be used as a further precaution against leakage. In this case the mastic sealant should be placed on the two shoulders of the groove. The interior of the concrete vault and underside of cover shall be coated with w/50 mil high build polyurethane, Sancon 100 polyurethane and primer or approved equal. See TC-9, WET WELL, VAULTS AND MANHOLE LINING, for application of Sancon system.

TC-6 THRUST DEVICES

6.1 Scope

This Article covers furnishing all materials and equipment and performing all operations necessary to detail, furnish, fabricate, construct, and install thrust devices.

6.2 Materials

6.2.1 Concrete Thrust Blocks

Concrete thrust blocks shall be constructed of 420-B-2000 concrete.

6.2.2 Other Thrust Devices

Materials for other thrust devices shall be as specified on the Plans or as directed by the Engineer.

6.3 Installation

6.3.1 Concrete Thrust Blocks

6.3.1.1 General

Concrete thrust blocks shall be placed between fitting and trench wall or trench bottom, as may be applicable. The bearing face and bottom of a concrete thrust block shall be on undisturbed sound material. Concrete thrust blocks shall be installed in accordance with Detail Drawing No. S-19. Concrete shall be kept behind the bells or flanges of fittings and valves. Form work shall be constructed whenever necessary to confine the concrete to the prescribed dimension for the block. Form lumber shall be removed prior to testing.

6.3.1.2 Upward Thrust

At vertical bends where upward thrust will occur, concrete thrust blocks utilizing reinforcing steel bar collars shall be installed in accordance with Detail Drawing No. S-19.

6.3.1.3 Curing

Concrete thrust blocks shall be allowed to cure for a minimum of 48 hours prior to pressure tests on the pipelines.

6.3.2 Other Thrust Devices

Thrust devices other than concrete thrust blocks shall be approved and installed as directed by the Engineer.

6.3.3 Excavation, Bedding and Backfill

Excavation, bedding and backfill for thrust devices shall be in accordance with these Specifications.

6.4 Location

The Contractor shall construct thrust devices as and where directed by the Engineer, as shown on the Plans and/or as required by these Specifications.

A concrete thrust device shall be provided at all valves, fittings and dead-ends. On slopes greater than 15 percent or at static pipeline pressures greater than 100 psi, thrust devices shall be installed as directed by the Engineer or as shown on the Plans.

6.5 Size

6.5.1 Concrete Thrust Blocks

Concrete thrust blocks shall be designed to have sufficient bearing area and shall be placed as to safely transmit to the surrounding earth, the maximum forces which may occur in the pipeline at that point. The minimum bearing areas of concrete thrust blocks shall be in accordance with Detail Drawing No. S-20.

The depth of concrete thrust blocks below valves shall conform with the following table and shall be full width of the trench.

Size of Valve	Depth of Thrust Block Below Valve
6 inch	6 inches
8 inch	8 inches
12 inch	12 inches
18 inch and up	As directed by Engineer

6.5.2 Other Thrust Devices

Sizes for other thrust devices shall be as specified on the Plans or as directed by the Engineer.

6.6 Coating

Exposed metal surfaces of thrust devices not otherwise protected by galvanizing or cement mortar shall be coated in accordance with Article TC-10, FIELD APPLICATION OF PROTECTIVE COATINGS.

6.7 Field Tests

After completion of the installation of the thrust device and before acceptance thereof, the Contractor shall perform such tests as may be necessary to assure proper functioning of the thrust device. Defects disclosed by such testing shall be repaired to the satisfaction of the Engineer.

TC-7 MANHOLES

7.1 Scope

This Article covers furnishing all labor, supervision, materials, and equipment and performing all operations necessary to construct manholes for gravity sewers.

7.2 Material

Watertight precast reinforced concrete manhole sections shall be manufactured in accordance with ASTM C-478. Riser sections shall be of various heights to bring the top of the structure to the established elevations and to permit ease of handling and installation.

7.3 Installation

7.3.1 General

Excavation and backfill operations shall conform to the provisions of these Specifications.

7.3.2 Installation of Sections

Precast sections shall be set plumb, in accordance with manufacturer's recommendations, and securely bonded together with a minimum thickness of 3/8-inch, Class C portland cement mortar in accordance with these Specifications. Joints shall be watertight and neatly pointed on the inside.

7.3.3 Access Section

An eccentric cone section shall be installed on the top riser section, on which shall be placed one or more grade rings, which shall form the base for the cast-iron manhole frame and cover, in accordance with Detail Drawing No. S-5.

7.3.4 Manhole Bases

Manhole bases shall be placed concrete, with size and shape in accordance with the Plans, and shall be shaped with metal forms (no hand forming allowed) to provide channels corresponding in size and shape to manhole inlets and outlets. Channels shall be smooth and accurately shaped, and shall vary uniformly in size and shape from inlet to outlet for changes in pipe size. Benching shall be broom finished to provide a non-skid surface.

7.3.5 Manhole Piping

Where pipe branches for future lateral sewers are to be built into the structures, as shown on the Plans, the outer ends shall be securely sealed by a cap or stopper of the same material as the branch.

In laying pipe next to structures, the pipe at the horizontal axis shall not project beyond the inside of the wall of the structure except that portion used as a channel invert, and in no case shall the socket of a vitrified clay pipe be built into the wall of a structure. Pipe fittings, including installation thereof, which are a part of a manhole installation shall conform to SSPWC Sections 207 and 208.

7.3.6 Remodeling Manholes, New Manhole on Existing Sewer

Where a manhole is to be remodeled on an existing sewer, the portion of the manhole bottom to be remodeled shall be removed to a depth sufficient to permit construction of new channels and shelves with concrete at least four inches below the outside of the bell. When a manhole is to be constructed on an existing sewer, the manhole shall be constructed in accordance with Detail Drawing Nos. S-1A, S-1B, S-5, S-8A or S-8B, as applicable. Sewage shall be conveyed across the manhole by means satisfactory to the Engineer. Sewage shall not be permitted to flow over new concrete channels until five days after channel construction is complete.

When new work is to be constructed inside a sewage structure against an existing concrete surface that has been exposed to sewage or a sewage atmosphere, the existing surface shall be prepared as follows:

Soft and loose materials shall be removed and the surface cleaned by sandblasting.

The surface shall be washed with a three percent solution of soda ash (Na_2CO_3) followed by a rinsing with clear water.

The surface shall then be washed with a three percent solution of hydrochloric acid (HCl) followed by a final rinsing with clear water.

7.3.7 Manhole Frame and Cover Sets

Casting shall be in accordance with ASTM A 48, Class 30. The bearing surfaces of the frames and covers shall be machined and the covers shall seat firmly into the frames without rocking. The frames and covers shall be thoroughly cleaned and inspected and painted or dipped with two coats of a commercial quality asphaltum paint. Shop drawings of manhole frames and covers shall be submitted to the Engineer for approval. Manhole frames and covers shall be set to elevations shown on the Plans and in accordance with Detail Drawing Nos. S-10A or S-10B.

7.3.8 Manhole Collars

Manhole collars shall be placed concrete or asphalt in accordance with Detail Drawing Nos. S-1A or S-1B as applicable.

7.4 Testing

The manhole exfiltration test shall be conducted only when required by the Plans. The Engineer shall select the manholes to be tested. If leakage is detected, the Engineer shall determine what additional testing shall be performed.

Each manhole tested shall have all piping inlets and outlets tightly sealed with stoppers and shall be filled with water to a point five feet above the bottom of the manhole base channel at the channel center. The manhole shall be left filled for one hour and then refilled to the original level to compensate for absorption.

One hour after refilling the water level shall be compared to the original level and any subsidence (change) exceeding .10 feet shall be considered unacceptable leakage. Any manholes displaying unacceptable leakage shall be repaired and retested.

TC-8 HOUSE LATERALS

8.1 Scope

This Article covers the furnishing and installation of house laterals connected to new or existing gravity sewers. Unless otherwise specified, only a single dwelling unit per lateral will be permitted. Each lateral shall be stationed.

8.2 Material

House laterals shall be vitrified clay pipe in accordance with SSPWC 207-8. Alternate materials shall be subject to District approval.

8.3 Installation

8.3.1 General

Unless otherwise specified, no 4-inch diameter house laterals shall be constructed into a manhole.

8.3.2 Location

The location of house laterals shall be marked as follows:

A. Streets with curbs: An "S" shall be chiseled or permanently marked on the curb at the location of the house laterals; and an appropriate mid-range or full range magnetic marker manufactured by 3M Electrical Products Division, Scotchmark Marker Locator (EMS) or equal shall be placed two (2) feet below the finished ground surface directly above the terminus of the lateral.

B. Streets without curbs: A magnetic marker as described in A. above shall be placed one foot below the finished ground surface directly above the terminus of the lateral. In areas where the finished ground surface is unknown the marker shall be installed two feet below the assumed finished ground surface.

C. Easements: A magnetic marker as described in A. above shall be placed at wye connection fittings in the sewer main where a lateral is or will be extended. The markers shall be placed two feet below the finished ground surface unless the easement area is paved in which case the marker shall be placed in the paving subgrade at a depth of two feet or less.

8.3.3 Slope

Unless otherwise specified, the depth of house laterals shall be sufficient to provide service to the lowest or most distant point to be served on each lot at a minimum grade of two percent with not less than one foot of cover over the top of the pipe.

8.3.4 Inspection

8.3.4.1 General

House lateral markings shall be verified for accuracy by appropriate District personnel. The termination of laterals and the placement of locators shall be witnessed by appropriate District personnel.

8.3.4.2 Television Inspection

Shall be in accordance with Article TC-14, TELEVISION INSPECTION.

8.3.5 House Connections

Unless otherwise shown on the Plans, the invert of the upper end of the house connection sewer shall be constructed to the elevation shown on the profile, or if no such elevation is shown, to a depth four feet below the top of the existing curb, or where there is no curb, four feet below the grade at the property line, see Detail Drawing Nos. S-9A, S-9B and S-9C. Branches may be rotated upward from the horizontal to any angle between 30 and 45 degrees in order to meet the slope of the house connection sewer. When the branch rotation does not conform to the slope of the house connection sewer, short lengths of beveled pipe may be used for adjustment.

8.3.6 Lateral Connections

8.3.6.1 General

Lateral connections to an existing sewer main shall be performed in a manner so as to minimize any potential damage to the existing sewers. The continuous operation of District sewers during connection of laterals shall be maintained at the Contractor's expense.

8.3.6.2 Saddle Connections

Prior to installing a wye saddle to the receiving sewer, the sewer shall be cored using an approved VCP coring tool. The saddle connection shall be approved for VCP and installed in accordance with the manufacturers' instruction. Under no circumstances shall debris from the work enter the sewer.

8.3.6.3 Wye Connections

Prior to installing a wye fitting in the receiving sewer main, the sewer main shall be cut with an abrasive saw or chain breaker over its entire circumference. An approved wye fitting with approved bandseals in accordance with ASTM C425 with stainless steel shear rings or equal shall be installed in the sewer main. The subgrade immediately below the wye fitting shall obtain a 95 percent compaction or be bedded with 3/4-inch gravel. Under no circumstances shall debris from the work enter the sewer.

TC-9 WET WELL, VAULTS AND MANHOLE LINING

9.1 General

This Article covers the protective coatings to be applied to areas damaged during construction to the inside surface of new or existing wet wells, concrete structures or vaults.

9.2 Materials

9.2.1 Primer

The primer shall be Sancon Epoxy 100 or equal.

9.2.2 Liner

The polyurethane lining shall be Sancon Polyurethane 100 or equal.

9.3 Installation

9.3.1 Surface Preparation

Concrete surfaces shall be allowed to age for 28 days prior to application of polyurethane lining system. Surfaces shall be cleaned of dirt, dust, form oil, curing compounds and other deleterious compounds in accordance with Steel Structures Painting Council SSPC-SP7-63 (sweep blasting) on new concrete; and in accordance with SSPWC 500 (pipeline system rehabilitation) on existing concrete cleaning with water blasting using high pressure hydro blast at a minimum pressure of 8,000 psi with a flow of 10 gallons per minute

Following surface blasting, the voids in the concrete greater than 3/16-inch in diameter or depth shall be filled by an approved sacking method where excessive porosity exists. The sacking will be performed in such a manner so as to fill only the voids while wiping clean any excess material on the concrete surface.

9.3.2 Priming or Sealing

Upon completion of surface preparation, the concrete surface shall be completely blown down using clean, dry, compressed air to remove all dust and loose particles or washed down using clean, fresh water. The concrete surface shall be completely dry before application of the primer, sealer or liner.

A primer shall be applied to the surface at a thickness of 3 to 5 mils dry. The primer shall be applied in such a manner that the concrete surface is completely saturated with the primer. Upon sufficient cure time (12 hours at 70 degrees Fahrenheit), the liner may be applied. The primer shall not be applied when ambient temperatures are below 40 degrees Fahrenheit or when ambient temperatures are above 115 degrees Fahrenheit. When concrete surfaces contain abnormal porosity, a second coat of primer may be needed. If this is the case, the application procedures for the second coat of primer are identical to that of the first coat of primer.

9.3.3 Liner

After priming has been completed, Scancon 100 polyurethane liner, or approved equal, shall be applied at a thickness of 100 mils in one continuous coating operation.

The application of polyurethane liners and primer shall be performed by workmen approved by the manufacturer as trained and experienced in applying these types of lining materials. The application equipment shall be in good working order to ensure correct proportions and mixing of components.

TC-10 FIELD APPLICATION OF PROTECTIVE COATINGS

10.1 Scope

This Article covers furnishing the materials and equipment and performing the operations necessary for field application of protective coatings.

10.2 Materials

10.2.1 Coal Tar Epoxy Coating

10.2.1.1 Materials

Coal tar epoxy coatings shall be of the manufacturer and type of one of the following: Bitumastic No. 300-M as manufactured by Koppers Company, Inc., or Engard 463 Coal Tar Epoxy as manufactured by Engard Coatings Corporation. Coatings shall be applied in accordance with manufacturer's recommendations.

10.2.1.2 Couplings

Valves, flanged joints, pipe, couplings and buried metal items, which are not galvanized or coated, shall be thoroughly cleaned and shall be coated with coal tar epoxy coating to a minimum dry film thickness of 16 mils.

10.2.1.3 Exterior Concrete Surface

Concrete vaults, manholes, wetwells and other underground concrete structures, unless otherwise noted, shall have the exterior surface prepared and coating system applied per the manufacturer's recommendation.

10.2.2 Repair

Repair of coatings and linings shall be made with the same material to a minimum thickness equal to the thickness of the original coating or lining on the pipe in accordance with stated manufacturer's recommendation.

TC-11 CARSONITE UTILITY MARKER

11.1 Scope

This Article covers furnishing all materials and equipment and performing all operations necessary to furnish, fabricate and install Carsonite Utility Markers.

11.2 Materials

Marker shall be Carsonite Utility Markers in accordance with Detail Drawing No. S-39.

11.3 Installation

Carsonite Utility Markers shall be installed where shown on the Plans in accordance with Detail Drawing No. S-39. Unless otherwise specified, Carsonite Utility Markers are required if valves, or air vacuum relief assemblies, or manholes are to be installed outside of paved areas, along force mains or other locations specified by the engineer.

11.4 Location

Carsonite Utility Markers shall be located inside the public right-of-way in such a position as to minimized the probability of damage from vehicular impact. Unless otherwise specified, Carsonite Utility Markers shall be located at the point two (2) feet inside the public right-of-way. The offset to the pipe centerline or center of manhole shall be recorded on a brass tag and affixed to the Carsonite Utility Marker. The tag shall face the pipe. If the distance to the edge of right-of-way is excessive, the marker post shall be installed as directed by the appropriate District personnel.

TC-12 SLOPE PROTECTION

12.1 Scope

This Article covers furnishing all materials and equipment and performing all operations necessary to detail and construct slope protection.

12.2 Materials

12.2.1 Cut-off Walls

12.2.1.1 Reinforced Concrete

Reinforced concrete shall be in accordance with SSPWC 201-1.1.2, Concrete Specified by Class. Reinforcing steel shall be in accordance with Grade 40 billet steel of ASTM A 615.

12.2.1.2 Concrete Masonry Units (CMU)

CMU cut-off walls shall be in accordance with these Specifications. Concrete blocks shall be 8"x8"x6" standard block. Reinforcing steel shall be in accordance with Grade 40 billet steel of ASTM A 615.

12.2.2 Surface Slope Protection

12.2.2.1 Concrete

Concrete surface slope protection shall be constructed of 560-C-3250 concrete.

12.2.2.2 Other

Other surface slope protection shall be approved by the Engineer.

12.3 Installation

12.3.1 General

Cut-off walls and surface slope protection shall be constructed in accordance with Detail Drawing No. S-26.

12.3.2 Cut-off Walls

12.3.2.1 General

Cut-off walls shall be a minimum thickness of 8 inches. The top of the wall shall be located just below finish ground grade and the bottom shall be 3 feet below ground grade or 6 inches above top of pipe, whichever is the least. The wall shall extend at least 12 inches into undisturbed soil on each side of the trench as excavated.

12.3.2.2 Reinforced Concrete

Reinforced concrete cut-off walls shall be a minimum of 8 inches thick and shall have No. 4 reinforcing steel bars on 8-inch centers each way. The reinforcing steel bars shall extend the full length of the wall less 3 inches of cover on ends.

12.3.2.3 CMU

CMU cut-off walls shall have No. 4 reinforcing steel bars placed vertically on approximately 8-inch centers and No. 4 reinforcing steel bars placed horizontally every 16 inches on center. Voids in the concrete block shall be filled with cement mortar.

12.3.3 Surface Slope Protection

Concrete surface slope protection shall be a minimum of 6 inches thick. The surface slope protection shall extend at least 12 inches on either side of the trench as excavated.

12.4 Location

12.4.1 General

Slope protection is required wherever the profile of the ground surface above the pipeline exceeds 15 percent and where no pavement or bituminous road surfacing is to be laid over the exposure of the pipe after backfill.

12.4.2 Slopes - 15 to 50 Percent

Where the profile lies between 15 percent and 50 percent, cut-off walls shall be constructed at a horizontal spacing such that the top of each wall, just below finished ground grade, shall be at an elevation not more than 36 inches below that of the bottom of the next adjacent wall uphill.

12.4.3 Slopes - More than 50 Percent

Where the profile exceeds 50 percent, cut-off walls shall be provided on a horizontal spacing of 10 feet, center to center, and surface slope protection shall be provided between walls.

TC-13 CLEAN-OUTS

13.1 Scope

This Article covers furnishing the materials and equipment and performing the operations necessary to furnish and install clean-outs.

13.2 Materials

13.2.1 Clean-Out Covers

Clean-out covers shall be Alhambra A-1240 as manufactured by Alhambra Foundry Company, Ltd., Alhambra, California, or approved equal.

13.2.2 Other Materials

Other materials shall be in accordance with these Specifications and Detail Drawing Nos. S-6.

13.3 Installation

Clean-outs shall be installed where indicated on the Plans or as directed by the Engineer. Clean-outs shall be at the termination of a sewer line, where there is no termination manhole. There shall be a maximum of 200 feet from a clean-out to the nearest manhole. Clean-outs shall be constructed in accordance with Detail Drawing No. S-6.

TC-14 TELEVISION INSPECTION

14.1 Scope

This Article covers furnishing all materials and equipment and performing all operations necessary to produce video media during closed circuit television inspection for sewer mains and for lateral connections on existing sewer mains.

14.2 Material

14.2.1 Equipment

Televising equipment shall include the television camera, television monitor, cables, power source, lights and other equipment necessary to the televising operation. The camera, television monitor and other components of the video system shall be capable of producing a minimum 350 line resolution color video picture.

14.2.1.1 Television Camera

The camera shall be specifically designed and constructed for operation in connection with sewer inspection. The camera shall be operative in one hundred percent (100%) humidity conditions and shall be capable of viewing ninety degrees (90°) to the axis to be inspected so that service connections can be properly inspected. Focal distance shall be adjustable through a range of from one inch to infinity. The camera shall be mounted on skids or tracks suitably sized for each pipe diameter to be investigated.

14.2.1.2 Lighting

Lighting for the camera shall minimize reflective glare. Camera and lighting quality shall be suitable to provide a clear, continuously in-focus picture of the entire inside periphery of the sewer pipe for all conditions encountered during the work.

14.2.1.3 Remote Footage Counter

The remote footage counter shall be accurate to two-tenths of a foot (2/10') over the length of the particular section being inspected and shall be mounted over the television monitor.

14.2.2 Video Media

The video media shall be high quality current technology. Any unacceptable video recordings, or portions thereof, shall be cause for rejection of the video recording and will necessitate re-televising.

14.3 Installation

14.3.1 General Requirements

The Engineer shall be present during the entire televised inspection process. After recording, the Contractor shall turn over the original video media to the inspector.

The lines shall be televised after completion of trench backfill and finished grading but prior to placement of pavement, unless otherwise approved by the Engineer.

The Contractor shall be responsible for the preparation of the sewer before televising. If the flow is such that bypassing of the sewage is required, the Contractor shall make appropriate arrangements with the District to bypass the sewage flow. The Contractor shall perform the bypass operation or secure a Subcontractor to perform the bypass operation under District supervision.

14.3.2 Execution

Televising shall be done one section at a time; each section isolated from the remainder of the sewer line as required. Sufficient water shall be supplied to cause drainage within the isolated section prior to televising.

The camera shall be moved through the line in either direction at a uniform rate, stopping when necessary to ensure proper documentation of the condition of the sewer line but in no case shall the television camera be pulled at speed greater than 30 feet per minute.

If, during the televising operations, the television camera will not pass through an entire manhole section, the Contractor shall re-set his equipment in a manner so that the inspection can continue opposite the obstruction. If the television camera encounters an obstruction within a section not accessible to a manhole, the Contractor shall remove the obstruction by excavation or other appropriate means, replace whatever pipe is necessary, and re-televise the entire section.

14.4 Documentation

Audio and written documentation shall accompany all video media.

14.4.1 Video Media

14.4.1.1 Labels

The video media and the container shall have printed labels containing the inspector number, media number, date of TV inspection, location, upstream and downstream manhole, or station numbers and job title (name, tract number).

14.4.1.2 Audio

The audio portion of the video media shall include date of inspection, description of pipe size, type and pipe joint length, upstream and downstream manhole or station numbers, description and location of each service connection and other discernible features, and description and location of each defect, including cracked pipe, protruding service taps, off set joints, collapsed sections, presence of scale and corrosion.

14.4.2 Written Documentation

A written report is required which shall include: date of inspection, video media number, location, size, type and length of pipe, direction of flow, beginning and end counter numbers, sketch showing street and cross streets where the TV inspection was made, description and station location of each lateral, and description and location of each defect, such as misalignment, offset joints, protruding service connections, cracked pipe, and split pipe.

TC-15 EPOXY COATING AND LINING

15.1 General

This Article covers furnishing all materials and equipment and performing all operations necessary to furnish and apply epoxy coating and lining.

15.1.1 Epoxy

Where specified or shown, an epoxy coating and lining shall be applied as specified herein. Except where otherwise indicated, ferrous surfaces, exclusive of stainless steel surfaces, in water passages of all valves, 4-inch and larger shall be fusion-bonded epoxy-coated and lined in accordance with AWWA C550-90.

15.1.2 Shop Drawing Submittals

The Contractor shall submit shop drawing for EPOXY COATING AND LINING.

15.1.3 Materials

Except as otherwise provided herein, the material used shall be 100 percent powder epoxy, fusion bonded and shall be 3-M Company primer and "Scotchkote," 206N or approved equal. Where, in the Engineer's opinion, because of the nature of the item being coated and lined, it would be impossible to use fusion-bonded powder epoxy method without causing damage to the item, the use of a liquid epoxy factory applied by the manufacturer of the item being coated will be permitted. Said liquid epoxy shall be 3-M Company "Scotchkote," 309 or Koppers 294 Epoxy Primer and No. 200 HB Epoxy System. The use of liquid epoxy other than those specified, including the equipment manufacturers proprietary coating system, must be reviewed and approved by the Engineer prior to use.

15.1.4 Execution

15.1.5 Surface Preparation

The surface shall be blast-cleaned in accordance with Steel Structures Painting Council SSPC-SP-5 (White Metal Blast Cleaning). The grit size used shall be as recommended by the epoxy manufacturer.

15.1.6 Application

Application of the epoxy coating and lining shall be in accordance with the manufacturer's instructions; provided that, if liquid epoxy is permitted, it shall be applied in not less than 3 spray coats to give the required total thickness.

15.1.7 Thickness of Coating

The minimum dry coating and lining thickness for liquid epoxy shall be 12 mils, provided, however that the thickness of coating in the grooves for valves or fittings designed to receive a rubber gasket shall be approximately 5 mils.

15.1.8 Inspection

Coating and lining thickness shall be checked with a nondestructive magnetic type thickness gage. Coating integrity shall be tested in accordance with AWWA C550-90, Subsection 5.3.3. All pinholes shall be marked, repaired and retested. No pinholes or other irregularities will be permitted in the final coating and lining.

15.1.9 Field Repairs

If small local repairs are necessary, they shall be made using a liquid epoxy recommended by the manufacturer of the epoxy with which the item was initially coated. The surface must first be hand tool cleaned in accordance with SSPC-SP-2 (Hand Tool Cleaning). The repair epoxy material shall be applied in strict accordance with the manufacturer's instruction.

TC-16 MID-RANGE PIPE LOCATORS

16.1 General

This Article covers furnishing all materials and equipment to install mid-range pipe locators.

16.2 Material

Mid-range pipe locator markers manufactured by 3M Electrical Products Division, Scotchmark Market Locator (EMS) Model No. 1258 or equivalent locators shall be placed two feet below the finished ground surface, unless otherwise specified by the drawings.

16.3 Installation

Mid-range pipe locators shall be placed at the end of every lateral, and on a force main at every 500 feet along force main, at horizontal changes in direction cleanouts, and as indicated on contract drawings.

TC-17 PAINTING

17.1 General

This Article covers furnishing all materials and equipment and performing all operations necessary to furnish and apply paint.

17.1.1 Shop Drawing Submittals

The Contractor shall submit shop drawings for PAINTING.

17.2 Materials

17.2.1 Delivery and Mixing

All material shall be delivered to the job in original, unopened containers bearing the manufacturer's name and brand. The paint material shall conform with SSPWC 210.1. Materials shall be thinned only in accordance with the manufacturer's printed instructions, and any material that does not comply with these Specifications shall be removed immediately from the jobsite. All paint, oil, etc., is to be first grade standard manufacture of Sinclair Paint Company, Rustoleum or as specified herein. Unless otherwise specified, no painting shall start without color approval.

17.2.2 Piping, Valving, and Appurtenances

17.2.2.1 Prime Coat

All above grade piping, valving and supports shall receive a prime coat per these specifications. Prime coat shall be "Rustoleum Undercoat" or equal. All primed or finish painted surfaces which are damaged shall be primed prior to refinishing.

17.2.2.2 Finish Colors

All valves, piping and supports shall be given two finish coats of industrial grade white enamel as approved by the District.

17.2.3 Ungalvanized Ferrous Metal in Structures and Above-Ground

17.2.3.1 Surface Preparation

Surfaces shall be sandblasted in accordance with Steel Structures Painting Council SSPC-SP-6 (Commercial Blast Cleaning), except that where, in the Engineer's opinion, sandblasting is obviously inappropriate because the size or location of the surface, or because of the difficulty in protecting adjacent work, such surfaces shall be either power tool cleaned in accordance with SSPC-SP-3 (Power Tool Cleaning) or hand tool cleaned in accordance with SSPC-SP-2 (Hand Tool Cleaning).

17.2.3.2 Protective Coating

Surfaces shall be primed or spot-primed as required. Prime coat shall be 2 mils of "Rustoleum 7673" primer, or equal. Intermediate coat shall be 2 mils of "Rustoleum 7600 Series" offwhite, or equal. Finish coat shall be 2 mils of "Rustoleum 7600 Series," or equal. Total of all coats shall be a minimum of 6 mils.

17.2.4 Galvanized Ferrous Metal in Structures and Above-Ground

17.2.4.1 Surface Preparation

Surfaces shall be cleaned in accordance with SSPC-SP-1 (Solvent Cleaning).

17.2.4.2 Protective Coating

Surfaces shall be primed or spot-primed as required. Prime coat shall be 2 mils of "Rustoleum 5281" primer, or equal. Intermediate coat shall be 2 mils of "Rustoleum 5200 Series" offwhite, or equal. Finish coat shall be 2 mils of "Rustoleum 5200 Series," or equal. Total of all coats shall be 6 mils.

17.2.5 Buried Galvanized

17.2.5.1 Surface Preparation

Surfaces shall be cleaned in accordance with SSPC-SP-3 (Power Tool Cleaning).

17.2.5.2 Protective Wrapping

Prior to wrapping the pipe with PVC tape, the pipe first shall be primed using a primer recommended by the PVC tape manufacturer. After being primed, the pipe shall be wrapped with a 20 mil adhesive PVC tape, half-lapped, to a total thickness of 40 mils. Application shall be in accordance with the tape manufacturer's instruction.

17.2.6 Underground Coatings

Buried valves, flanged joints, sleeve-type couplings and other buried metal items, which are not galvanized or mortar coated, shall be thoroughly cleaned and shall be coated with coal tar coating to a minimum dry film thickness of 16 mils.

Coal tar coatings shall be of the manufacturer and type of one of the following: Bitumastic super tank solution as manufactured by Koppers Company, Inc., or Engard 463 Coal Tar Epoxy as manufactured by Engard Coatings Corporation. Coatings shall be applied in accordance with the manufacturer's recommendations.

Coal tar coatings shall only be used for the protection of exterior surfaces or underground appurtenances. Coal tar coatings shall not be used for interior linings. See TC-10, FIELD APPLICATION OF PROTECTIVE COATINGS, for additional information.

17.3 Execution

17.3.1 Temporary Work Suspension

The Contractor shall not paint during adverse atmospheric conditions such as high drying winds, dust, high humidity, extreme surface temperatures on exterior work or any other conditions which would affect the quality of the paint finish. Painting shall not be done while carpenters, masons, or other tradesmen are working.

17.3.2 Preparation of Surfaces and Paint Application

Coats shall be of the consistency, coverage, and applied as recommended by the manufacturer's printed instructions. Materials shall be applied so as to be free from sags, runs, or other defects. Brush strokes shall appear in one direction only when finished and no curved marks shall show. All coats shall be thoroughly dry before succeeding coats are applied, and each area shall receive its complete first coat before the second coat or following coat is applied in that area. All primer, second and third coats, shall be applied with a brush. All areas shall be kept clean while painting is in progress.

Each coat shall produce a minimum film thickness as specified herein. In areas where this thickness is not developed, sufficient additional coats shall be applied to produce it. All coating thicknesses specified herein refer to minimum dry film thicknesses.

COACHELLA VALLEY WATER DISTRICT

STANDARD SPECIFICATIONS FOR CONSTRUCTION OF
SANITARY SEWER SYSTEMS

PART III - SPECIAL PROVISIONS

AMENDMENTS TO THE STANDARD SPECIFICATIONS FOR PUBLIC WORKS CONSTRUCTION (SSPWC)

SP-1 If any conflict exists between the Standard Specifications for Public Works Construction (SSPWC) and other provisions of this Specification, the other provisions of this Specification shall govern unless otherwise agreed in writing by the parties hereto.

SP-2 The following supplements modify, change, delete from or add to the SSPWC. Where any section of the SSPWC is modified or any paragraph, subparagraph or clause thereof is modified or deleted by these supplements, the unaltered provisions of that section, paragraph, subparagraph or clause shall remain in effect.

The section references and titles used herein identifies the section numbers in the SSPWC.

SP-3 Amend the SSPWC as follows:

SECTION 1 - TERMS, DEFINITIONS, ABBREVIATIONS AND SYMBOLS

Delete Part 1 - GENERAL PROVISIONS, excepting therefrom Section 1-2, DEFINITIONS; Section 1-3, ABBREVIATIONS; 1-4, SI; and 1-5 SYMBOLS.

1-2 DEFINITIONS

Delete the definitions of AGENCY, BOARD and ENGINEER, and add the following:

AGENCY - The individual, partnership, corporation, joint venture or other legal entity entering into a contract with the Contractor to have work performed. The word AGENCY shall include the word SUBDIVIDER.

BASEMENT MATERIAL - The material in excavation or embankments underlying the lowest layer of subbase, base pavement, surfacing or other specified layer which is to be placed.

BOARD - The Board of Directors of the Coachella Valley Water District.

ENGINEER - Whenever not qualified, the Chief Engineer of the Coachella Valley Water District, acting either directly or through his properly authorized representative, such representative acting severally within the scope of the particular duties entrusted to them.

MAIN - Any pipeline eight inches in diameter or larger used for the transmission and collection of sewage.

NON-CORROSIVE SOIL - A soil in which the effect of corrosion on underground steel water mains can be neglected for the service life of the pipe as determined by actual observations and conclusions made by a properly qualified person. In addition to the consideration of soil temperature, pH and potential measurements, the resistivity of the soil shall be over 2,000 ohms per cubic centimeter.

SUBDIVIDER - A person who proposes to divide, divides or causes to be divided, real property into a Subdivision for itself or for others, or develops real property. Except that employees and consultants of such Person, acting in such capacity, are not Subdividers.

SUBDIVISION - The division of any improved or unimproved land, shown on the latest equalized county assessment roll as a unit or as contiguous units, for the purpose of sale, lease or financing, whether immediate or future, except for leases of agricultural land for agricultural purposes. Subdivision includes a condominium or a community apartment project as defined in Section 11004 of the Business and Professions Code.

SURFACING - The uppermost layer of material placed on the traveled way or shoulder. This term is used interchangeably with pavement.

1-3 ABBREVIATIONS

1.3.2 Common Usage

Add the following:

Abbreviation	Word or Words
DIP	Ductile Iron Pipe
DR	Dimension Ratio
gpm	Gallons per minute
psi	Pounds per square inch
PVC	Polyvinyl Chloride Pipe or Product
SSPWC	Standard Specifications for Public Works Construction

1.3.3 Institutions

Add the following:

Abbreviation	Word or Words
AASHO	American Association of State Highway Officials
NSF	National Sanitation Foundation
SSPC	Steel Structures Painting Council

1-4 METRIC INTERNATIONAL SYSTEM (SI)

1-4.2 Metric Units

Add the following:

Abbreviation	Units
mg	Milligram
mg/L	Milligrams per liter

1-5 SYMBOLS

Add the following:

Ø	Diameter
Chw	Hazen-William Coefficient

SECTION 201 - CONCRETE, MORTAR AND RELATED MATERIALS

201-1 PORTLAND CEMENT CONCRETE

201-1.1 Requirements

201-1.1.2 Concrete Specified by Class

Add the following items to the table:

Construction	Concrete Class	Maximum Slump (Inches)
STREET SURFACE IMPROVEMENTS		
Concrete surrounding manholes, cleanouts and vault frames, drainage facilities for slopes, sidewalks, cross gutters and driveways.	520-C-2500	4
SEWER AND STORM DRAINAGE FACILITIES		
Pipe post foundations; support under OCTOBERction structure inlets; deadmen for timber bulkheads; wall support under pipe; base or cradle for pipe laid in tunnel or casing; sleepers and reinforced blankets for pipes; and pressure concrete for tunnel backfill.	480-C-2000	5
MISCELLANEOUS		
Concrete for manhole base and slope protection.	560-C-3250	4

201-1.2 Materials

201-1.2.1 Portland Cement

Delete first paragraph and add the following:

The cement to be used or furnished shall be Type V Portland Cement conforming to ASTM C150 unless otherwise specified.

203-1 PAVING ASPHALT

203-1.1 General

Add the following:

The mixes listed in the table below shall be used unless otherwise specified (types shall be in accordance with Subsection 203-6.3.2):

TYPE	USAGE
B (Medium Coarse)	Base course for streets (machine or hand laid) Base course for alleys (machine or hand laid) Base course for trench resurfacing (machine laid)
C1 (Medium)	Wearing surface for streets and alleys (machine laid) Leveling course (machine laid) Overlay (capping) 1½-inch minimum thickness (machine laid) Surfacing for streets, 4 inches total thickness (machine laid)
D1 (Fine)	Wearing surface for streets and alleys (hand laid) Wearing surface for trench resurfacing (machine laid) Asphalt Sidewalks Overlay (capping) less than 1½-inch thick (machine laid) Extruded curb

SECTION 207 - PIPE

Add the following:

Pipe for use in sanitary sewer systems shall be either PVC plastic pipe in accordance with Section 207-17 or vitrified clay pipe in accordance with Subsection 207-8.

207-9 IRON PIPE AND FITTINGS

207-9.2.3 Fittings

Delete the Subsection and add the following Subsections:

Fittings for force main pipelines shall be ductile iron flanged in accordance with AWWA C110 with ductile iron "Tyton" push-on or mechanical joint. All ductile iron fittings shall have a fusion bonded epoxy lining and coating. No compact fittings, AWWA C153, are allowed.

Fittings shall be furnished with flanged joints for connection to valves and "Tyton" push-on or mechanical joints for connection to ductile iron pipe.

207-9.2.4 Lining and Coating

Delete this Subsection and add the following Subsection:

Ductile iron fittings shall be lined and coated with fusion bonded epoxy in accordance with TC-15, EPOXY COATING AND LINING, on the District's specification.

207-9.2.6 Polyethylene Encasement for External Corrosion Protection

Add the following sentence:

Polyethylene encasement shall be the tube type and shall be installed in accordance with AWWA C-105 Installation Method A.

207-17 PVC PLASTIC PIPE

207-17.1 General

Delete this Subsection and add the following Subsection:

PVC pipe shall be used in sanitary sewer systems for force mains, or when necessary for sewer and water separation requirements as specified on Detail Drawing Nos. S-3 and S-4 or as specified on the Plans, or as directed by the Engineer.

PVC pipe couplings shall be in accordance with AWWA C900 or C905 as applicable for pressure pipe with ductile iron pipe equivalent diameters in accordance with AWWA C110 and C150. The minimum rating for PVC pipe shall be DR 14 and DR 18 for C900 and equivalent for C905, respectively, except as stated on Detail Drawing Nos. S-3 and S-4. Standard pipe length shall be 20-foot. Pipe shall be installed within 90 days from the date of manufacture.

Pipe stored on the job site shall be covered with canvas or other opaque material to protect it from the sun's rays and shall be well ventilated to prevent heat build up.

207-17.3 Joining Systems

207-17.3.1 General

Add the following:

Upon the District's request, the Contractor shall furnish for District's approval pipe manufacturers drawings showing dimensions and manufacturers tolerances of pipe and joint to be used on the work. Integral bell joints as recommended by the pipe manufacturer may be used. Only ductile iron fittings lined with fusion bonded epoxy in accordance with TC-15, EPOXY COATING AND LINING, of District's specification shall be used. No PVC fittings will be allowed unless approved by the engineer.

SECTION 208 - PIPE JOINT TYPES AND MATERIALS

208-1 GENERAL

Delete the first sentence and add the following paragraph:

Joints for vitrified clay pipe shall be premolded, plastic factory-made, mechanical compression type similar and equal to "Speed-Seal" or "Wedge Lock" as manufactured by Interpace and Pacific Clay Products, respectively, or the rubber sleeve coupling for plain end vitrified clay pipe equal to "Band Seal" as manufactured by Mission Clay products Corporation. No other type of joint will be permitted, unless approved by the Engineer. Joint material shall comply with the requirements for Type "D" or "G" joints. The shear ring in the Type "D" joint shall be stainless steel.

SECTION 211 - SOILS AND AGGREGATE TESTS

211-2 COMPACTION TESTS

211-2.2 Field Density

Delete this Subsection and add the following Subsection:

Field density tests shall be performed in accordance with the test procedure specified in ASTM D 1556 or ASTM D 2992. In place densities and moisture contents may be determined by the use of State of California Test Method No. 231-E.

SECTION 300 - EARTHWORK

300-1 CLEARING AND GRUBBING

300-1.1 General

Add the following paragraph:

No trees shall be removed without prior written permission from the Engineer. The cutting down or removal of trees is prohibited between the hours of 6:00 p.m. and 7:00 a.m. and on any Saturday, Sunday or legal holiday unless permission is obtained from the Engineer.

300-1.3 Removal and Disposal of Materials

300-1.3.2 Requirements

(a) Bituminous Pavement.

Delete the second sentence and add the following paragraph:

Cuts at joint lines shall be saw cut only when required on the Plans or by the requirements of an encroachment permit. Loose material shall be removed before the new pavement is laid. Except as approved by the Engineer, no more than 20 working days shall elapse at a specific location between the removal of asphalt pavement and the placing of the final pavement at that location. Where paving is to be done at separate widely spaced areas, the Contractor shall schedule the operations to meet these time limitations and progressively complete work from one end of the project to the other. Unless the placing of the finish course immediately follows the removal of asphaltic wearing surface, temporary pavement shall be placed and maintained in good condition adjacent to all stepped edges in rough areas within the area to be paved to provide a smooth surface for traffic.

SECTION 306 - UNDERGROUND CONDUIT CONSTRUCTION

306-1 OPEN TRENCH OPERATIONS

306-1.1 Trench Excavation

306-1.1.1 General

Add the following paragraphs:

In the event that blasting is necessary in excavating, the blast shall be blanketed with chain links and carpet mats. No blasting shall be done within five feet of any water, gas, sewer or other pipe, main or conduit intersecting the excavation. No blasting will be allowed except by permission in writing from the Engineer.

Any excavation carried down below the grades shown on the Plans or in excess of those ordered by the Engineer shall be refilled in layers and compacted to 90 percent relative compaction or Class 480-C-2000 concrete when approved by the Engineer. Such work shall be done entirely at the Contractor's expense.

The Contractor shall furnish, install and operate all the necessary machinery, piping, appliances and equipment to keep the excavation reasonably free from water during construction and shall dispose of the water as approved by the Engineer. He shall have on at all times hand sufficient pumping equipment and machinery in good working condition for all ordinary emergencies. Competent mechanics for the operation of all pumping equipment shall be available at all times and he shall provide all means and facilities necessary to conduct water to the pumps.

The trench and other excavation shall be kept entirely free of water while concrete or pipe is being placed and until all concrete or mortar has set hard.

Water shall be disposed of in such a manner as will not cause injury to public or private property, nor be a nuisance or a menace to the public.

Other methods of water control, other than dewatering, shall be subject to the approval of the Engineer.

306-1.1.3 Maximum and Minimum Width of Trench

Add the following:

The maximum allowable width of trench for vitrified clay pipe, including the width required for sheeting, if necessary, shall be the pipe bell diameter plus 16 inches. For cover on the pipe less than 8 and greater than 4 feet, trench width for VCP pipe is not limited.

The width of trench for pipe or conduit shall be such that there is a minimum of four inches clear between the outer surface of the pipe or conduit and the excavation or the trench timbers.

The excavation for manholes and other structures shall be sufficient to leave at least 24 inches in the clear between their outer surfaces and the embankment or timbering which may be used to protect them.

306-1.2 Installation of Pipe

Add the following:

Where any portion of the sewer is located within ten feet of any tree (measured horizontally from the center line of the sewer to the center of the tree), the removal of which is not included in the Contract for the sewer improvements, the joints of the pipe shall be wrapped with Bio-Barrier® or a root herbicide product to prevent root intrusion. No additional compensation shall be allowed for this encasement when required on the basis of the forgoing.`

Sanitary sewer lines, house laterals and domestic water supply mains separated by less than 10 feet horizontally, measured from outside of pipes, shall be installed in accordance with Detail Drawing Nos. S-3 and S-4.

Sanitary sewer lines and house laterals that cross domestic water supply mains shall be installed in accordance with Detail Drawing Nos. S-3 and S-4.

306-1.2.1 Bedding

Add the following:

The backfill and bedding zones and compaction requirements shall be as shown on the Plans and Detail Drawing Nos. S-2 and S-7. Place material in the trench simultaneously on each side of the pipe for the full width of the trench and the depth of the pipe zone in layers 6 inches in depth. Each layer shall be thoroughly compacted by tamping or, where the material is sufficiently granular in nature as determined by the Engineer, by water settling. In all cases, backfilling of the pipe zone must be done by hand. Particular attention shall be given to the underside of the pipe and fittings to provide a firm support along the full length of the pipe. The pipe zone shall be considered to extend 12 inches above the top of the pipe and shall be compacted in the trench such that there will be obtained a compaction of not less than 85 percent of maximum dry density at the optimum moisture content.

306-1.2.2 Pipe Laying

Add the following paragraphs:

Any underground pipeline construction in that area south and/or east of the Coachella Canal and south of Highway 111, east of Washington Street, or as

specified in the Plans or these Specifications shall be subject to the following conditions:

a. Ductile iron pipe, all fittings, valves and other steel or iron appurtenances shall be protected with polyethylene encasements in accordance with these Specifications.

306-1.2.6 Field Jointing of Cast Iron Pipe

Change the heading to read:

306-1.2.6 Field Jointing of Ductile Iron Pipe

306-1.4 Testing Pipelines

306-1.4.5 Water Pressure Test

Add the following:

C = 0.50 for ductile iron pipe with mechanical or rubber gasket joint.

306-1.5 Trench Resurfacing

306-1.5.2 Permanent Resurfacing

Delete the first paragraph and add the following:

Trench resurfacing shall be subject to the requirements of the governing encroachment permits. Private streets and alleys shall be reconstructed by the Contractor to the same dimensions and with the same type of materials used in the original work.

306-1.6 Basis of Payment for Open Trench Installations

Delete this Subsection.

306-2 JACKING OPERATIONS

306-2.1 General

Delete the sixth paragraph.

306-6 REMODELING EXISTING SEWER FACILITIES

Add the following:

The Contractor shall provide all necessary bypasses at Contractor's expense. The Contractor shall submit for approval for the Engineer a proposed method of bypassing for each case not detailed on the Plans or specification.

Existing sewers intercepted by a new sewer shall be maintained in service, or bypassed, until authority to connect to the new sewer is granted by the Engineer. Such authority is contingent upon final inspection and acceptance of all new sewer construction, downstream from the required point of connection.

COACHELLA VALLEY WATER DISTRICT

STANDARD SPECIFICATIONS FOR THE CONSTRUCTION OF SANITARY SEWER SYSTEMS

PART IV - DETAIL DRAWINGS

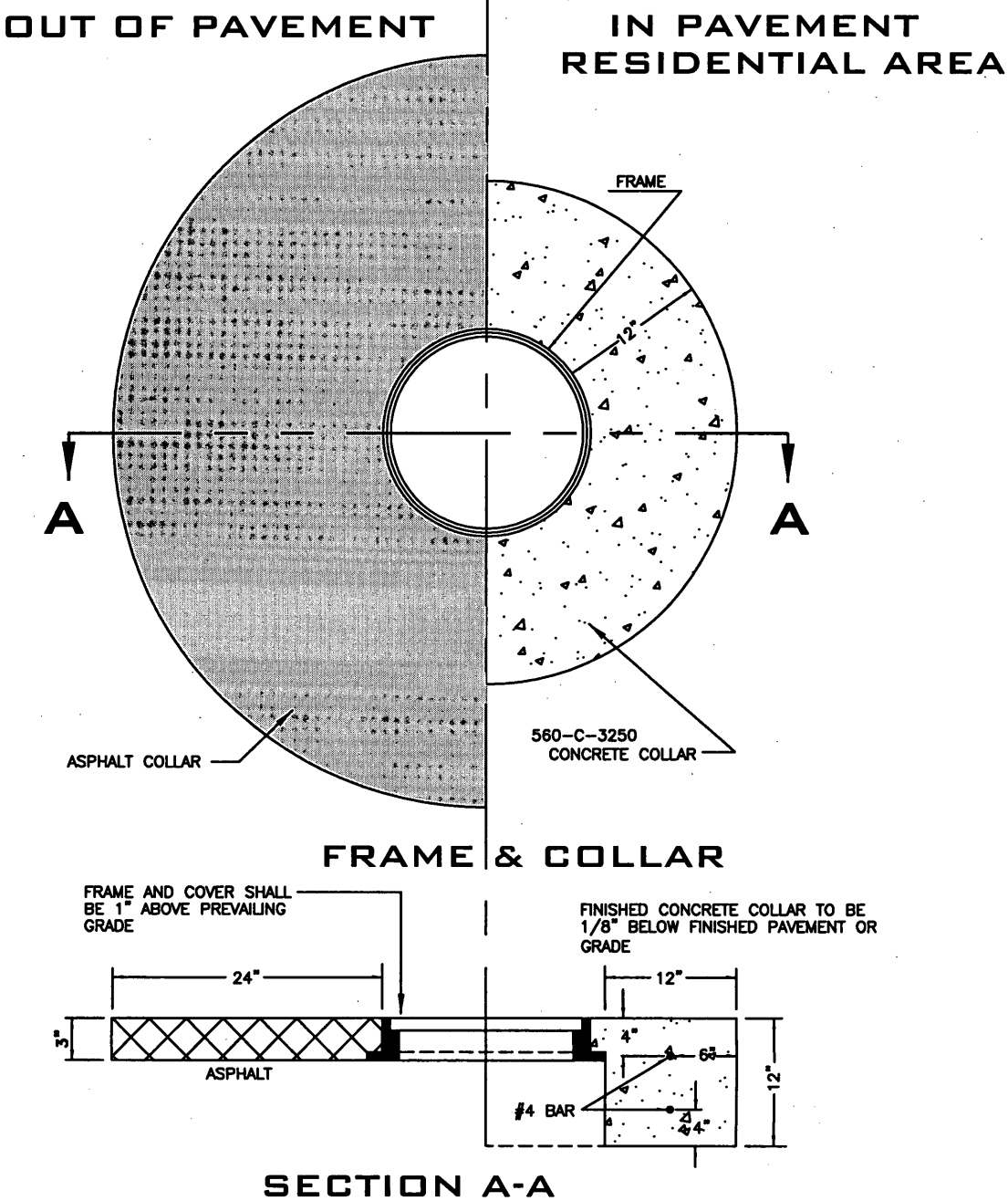

COACHELLA VALLEY WATER DISTRICT

MANHOLE COLLAR IN RESIDENTIAL AREA LIGHT TRAFFIC AREA

APPROVAL DATE: OCT 2005

S-1A

OUT OF PAVEMENT

IN PAVEMENT NONRESIDENTIAL ROADWAYS

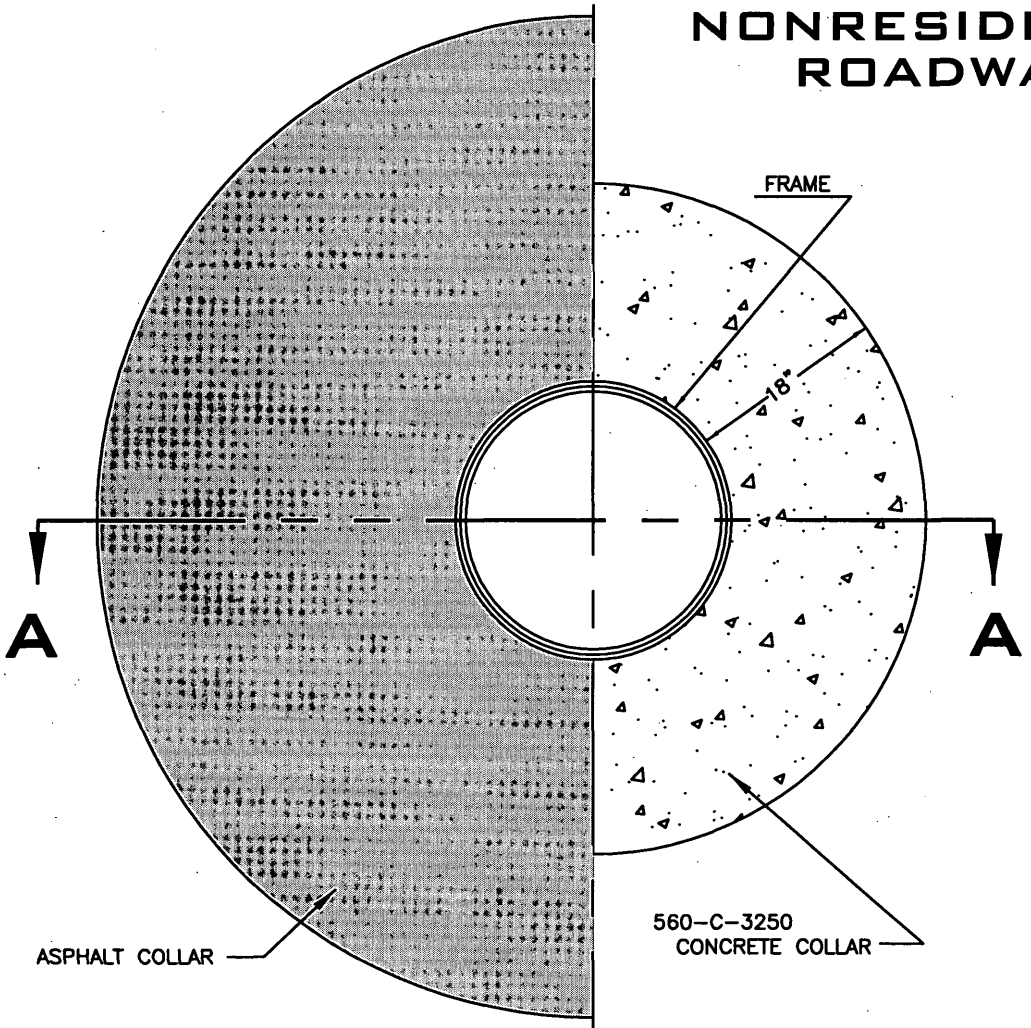

FRAME & COLLAR

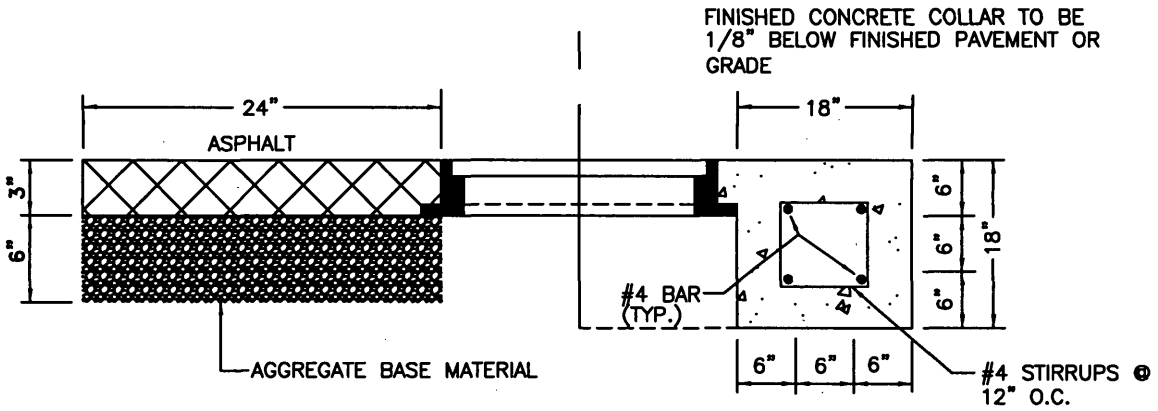

SECTION A-A

COACHELLA VALLEY WATER DISTRICT

MANHOLE COLLAR IN HEAVY TRAFFIC AREA

APPROVAL DATE: OCT 2005

S-1B

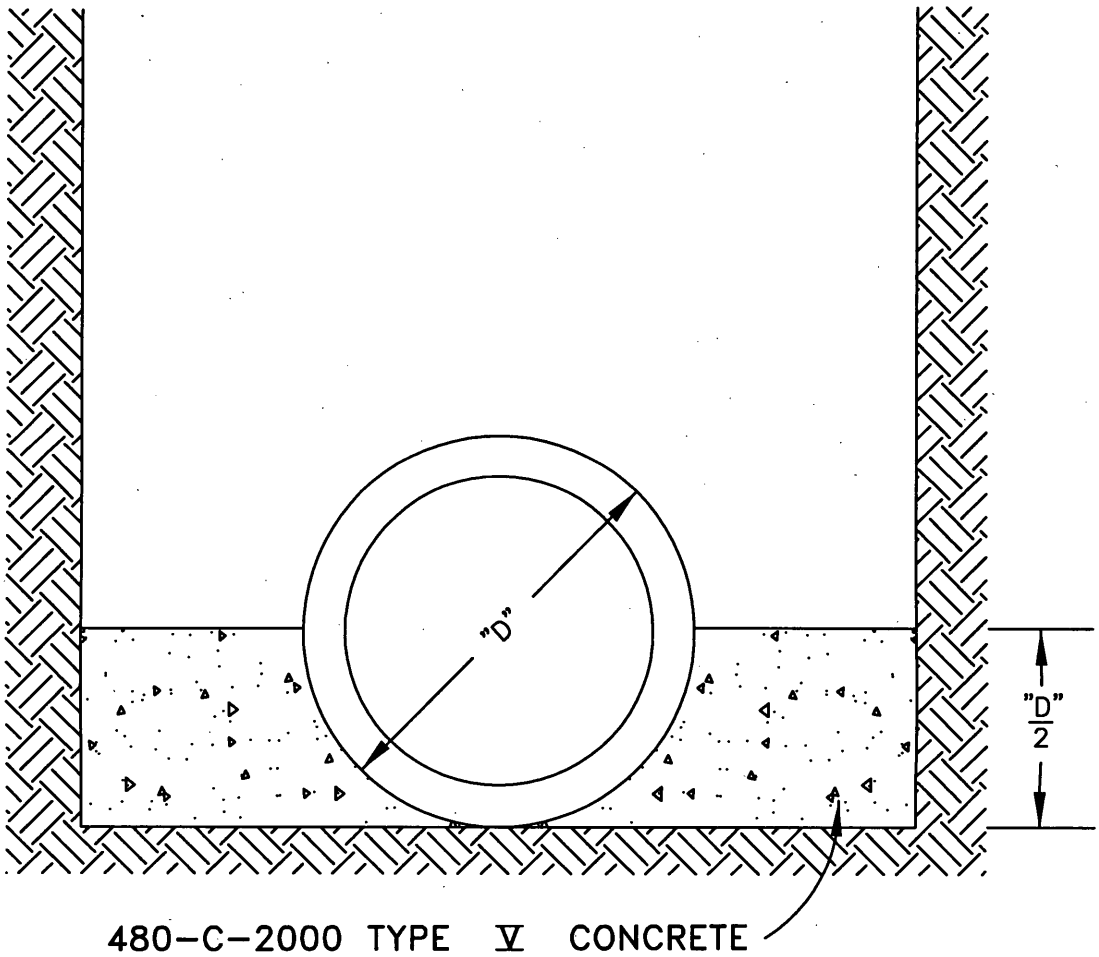

COACHELLA VALLEY WATER DISTRICT

CONCRETE CRADLE

APPROVAL DATE: OCT 2005

S-2

CASE 1
NEW SEWER
EXISTING WATER LINE

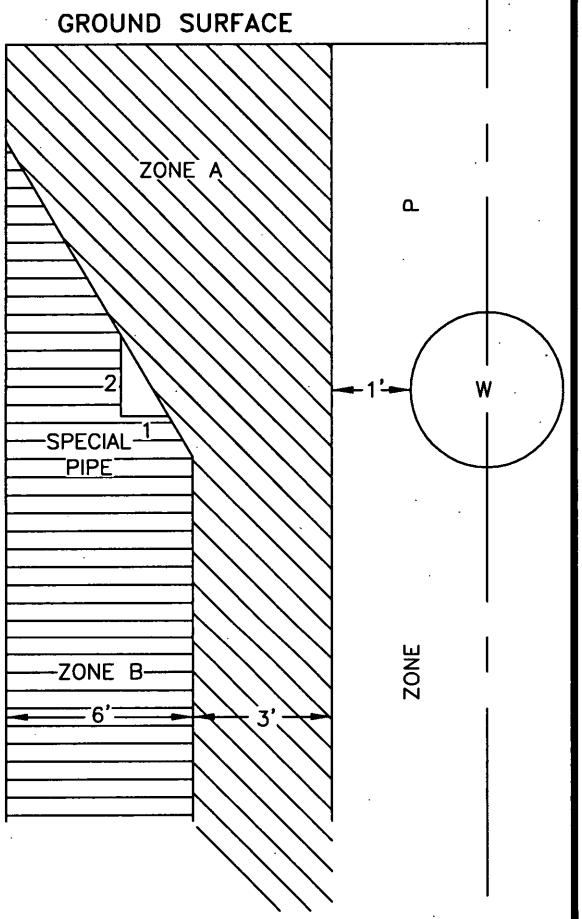

CASE 2
NEW WATER
EXISTING SEWER LINE

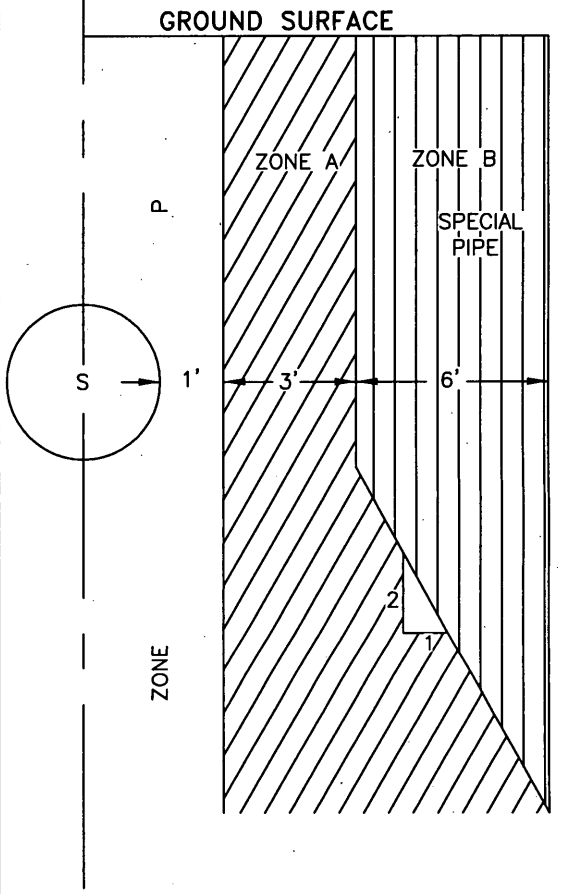

CASE 1 – NEW SEWER

ZONE	SPECIAL CONSTRUCTION
P	CONSTRUCTION PROHIBITED
A	CONSTRUCTION PROHIBITED
B	1. VCP, TYPE "G" JOINT 2. PVC–AWWA C 900 DR–14 OR AWWA C–905 DR–14

CASE 2 – NEW WATER

ZONE	SPECIAL CONSTRUCTION
P	CONSTRUCTION PROHIBITED
A	CONSTRUCTION PROHIBITED
B	DUCTILE IRON PIPE

COACHELLA VALLEY WATER DISTRICT

SEPARATION AND CONSTRUCTION REQUIREMENTS FOR SEWER AND WATER LINES (PARALLEL CONSTRUCTION)

APPROVAL DATE: OCT 2005 | W-1/S-3

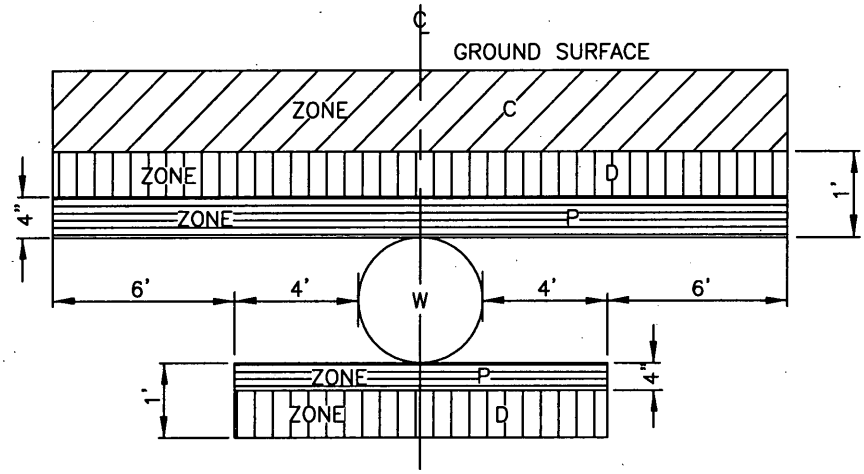

CASE – 1

NEW SEWER
EXISTING WATER

CASE 1 – NEW SEWER

ZONE	SPECIAL CONSTRUCTION
P	CONSTRUCTION PROHIBITED
D	CONSTRUCTION PROHIBITED
C	1. PVC–AWWA C 900 DR–14 ● OR AWWA C–905 DR–14 2. VCP IN 1/4 " STEEL SLEEVE, WELDED JOINTS.

● NEW PIPE TO BE CENTERED OVER PIPE BEING CROSSED

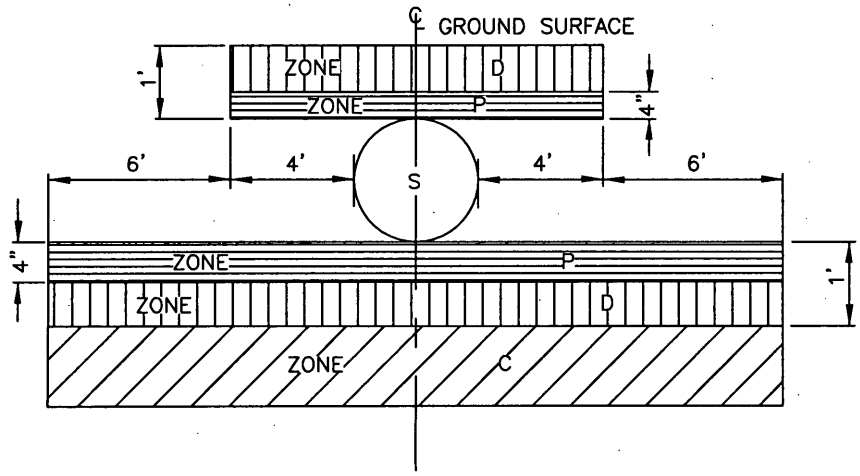

CASE – 2 & 3

NEW WATER/ WATER SERVICE
EXISTING SEWER

CASE 2 – NEW WATER

ZONE	SPECIAL CONSTRUCTION
P	CONSTRUCTION PROHIBITED
D	CONSTRUCTION PROHIBITED
C	DUCTILE IRON PIPE

● NEW PIPE TO BE CENTERED OVER PIPE BEING CROSSED

CASE 3 – NEW WATER

ZONE	SPECIAL CONSTRUCTION
C	COPPER–NO JOINTS

COACHELLA VALLEY WATER DISTRICT

SEPARATION AND CONSTRUCTION REQUIREMENTS FOR SEWER AND WATER LINES (CROSSINGS)

APPROVAL DATE: OCT 2005 | **W-2/S-4**

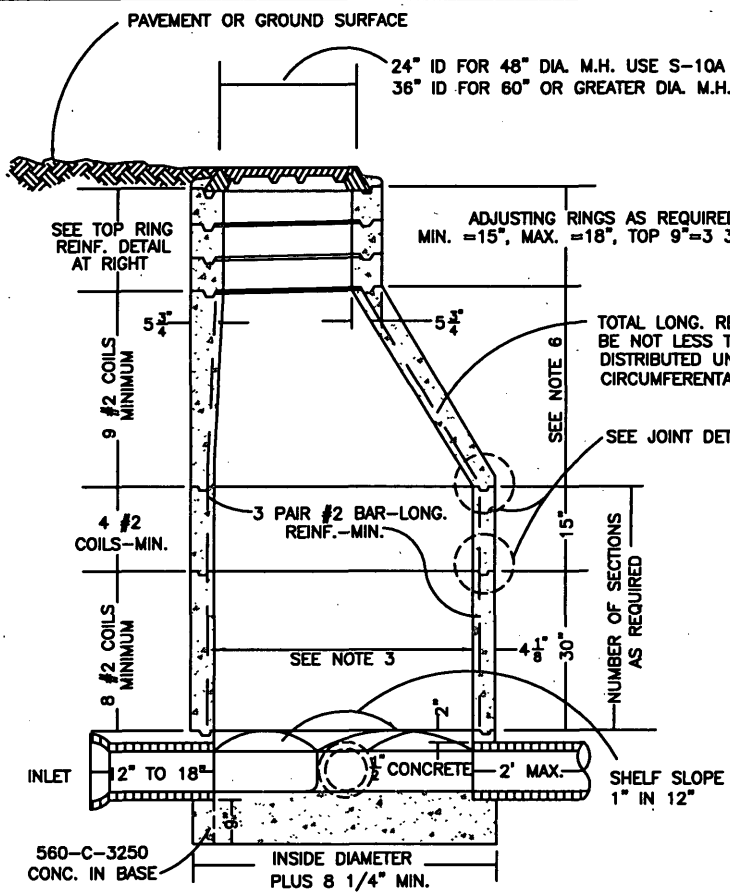

SECTIONAL ELEVATION A-A

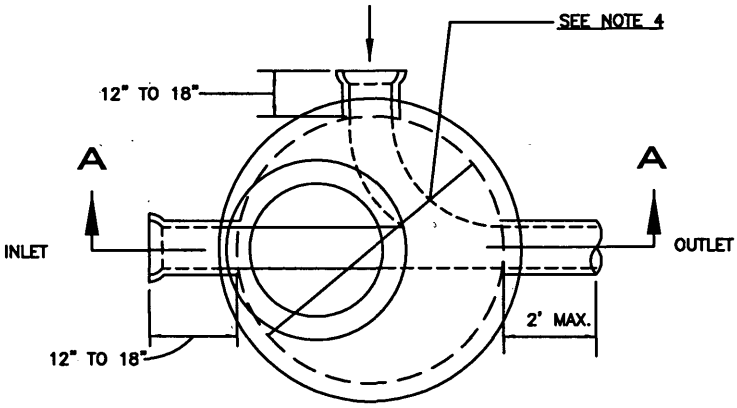

PLAN OF BASE

PIPE SIZE (DIA.)	MIN. SLOPE
8"	.0033
10"	.0024
12"	.0019
15"	.0014
18"	.0014
21"	.0014
24"	.0014
27"	.0014
30"	.0014
33"	.0014
36"	.0014

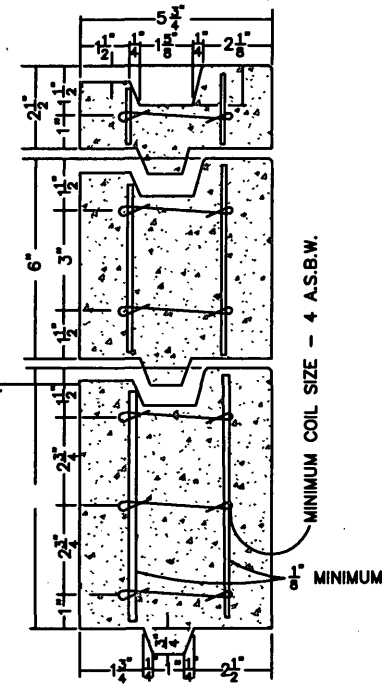

TOP RING DETAIL

NOTES

1. THE DEPTH OF CHANNEL SHALL EQUAL THE PIPE DIAMETER FOR ALL SIZES OF PIPE. FOR SPECIAL CHANNELS IN TRAP OR GAUGING MANHOLES, SEE SPECIAL PLANS.
2. WHENEVER PRACTICABLE THE FRAME AND COVER SHALL BE PLACED DIRECTLY OVER THE INLET OF THE STRUCTURE EXCEPT AS OTHERWISE NOTED ON PLANS.
3. 48" DIA. FOR 21" DIA. OR SMALLER PIPE. (MINIMUM SIZE) 60" DIA. FOR 24" DIA. OR LARGER PIPE. (MINIMUM SIZE)
4. LARGER DIAMETER MANHOLES MAY BE REQUIRED FOR 27" DIA. OR LARGER PIPE. CHECK WITH ENGINEER.
5. MANUFACTURING METHODS AND MATERIALS FOR PRE CAST UNITS SHALL CONFORM TO ASTM C-478.
6. TAPERED HEIGHT 30" MIN. FOR 48" DIA. TAPERED HEIGHT 24" MIN. FOR 60" DIA. OR GREATER.
7. STRUCTURAL ELEMENTS OF MANHOLE SHALL MEET ALL APPROPRIATE ASTM STANDARDS.
8. SEE MANHOLE FRAME AND COVER STD. DETAIL FOR SIZE AND TYPE

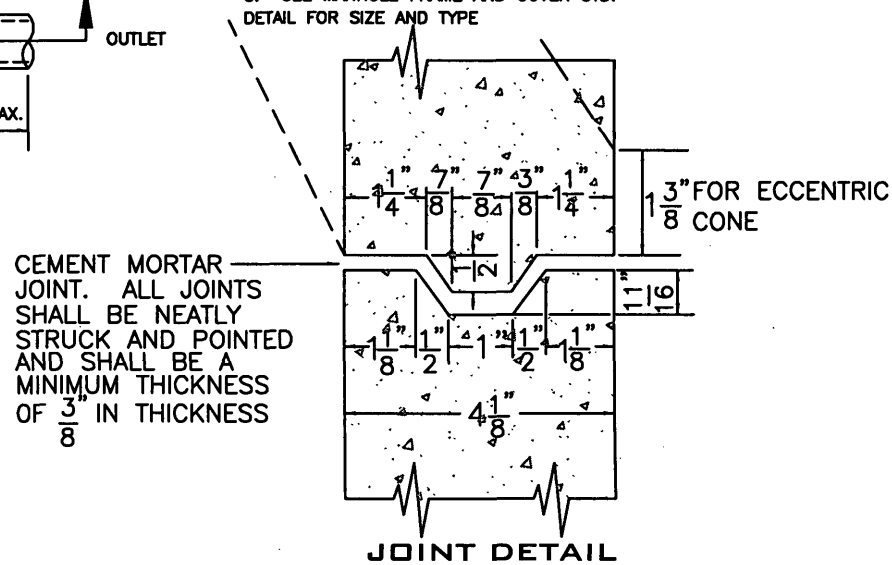

JOINT DETAIL

COACHELLA VALLEY WATER DISTRICT

REINFORCED PRECAST CONCRETE MANHOLE

APPROVAL DATE: OCT 2005

S-5

THE LID SHALL HAVE
THE WORD "SEWER" OR
THE LETTERS "C.O."
IMPRINTED ON IT.

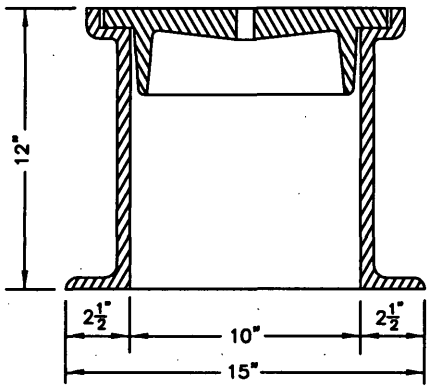

SECTION A-A

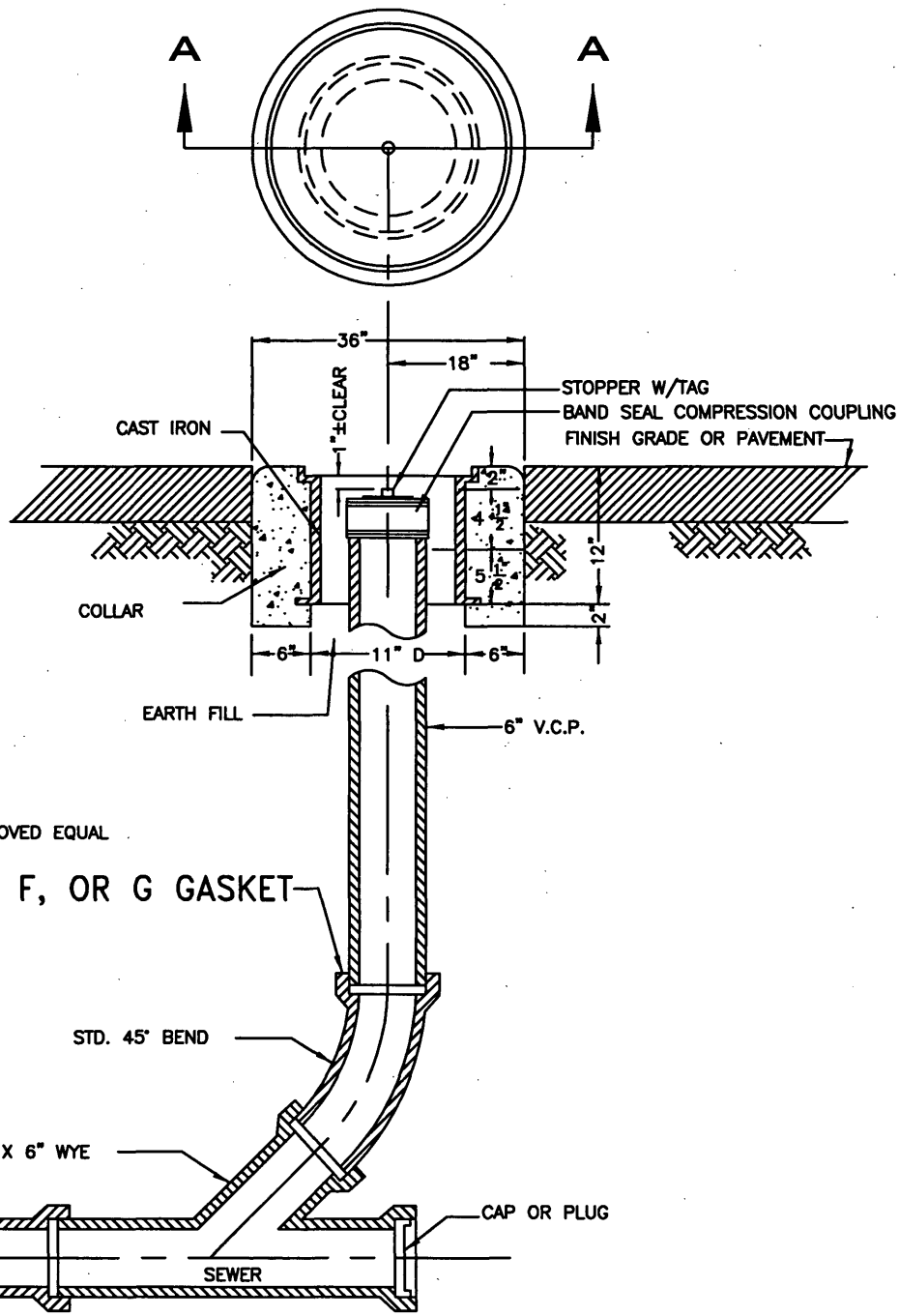

NOTE:

1. CONCRETE SHALL BE 520-C-2500
2. CASTING PART-ALHAMBRA A-1240 OR APPROVED EQUAL

COACHELLA VALLEY WATER DISTRICT

STANDARD CLEAN-OUT

APPROVAL DATE: OCT 2005

S-6

CVWD
TRENCH BACKFILL DETAIL FOR EXCAVATION

EXCAVATION FOR TRENCHES
≥ 15 LF IN DEPTH
REFER TO NOTE-3 FOR SPECIFICATION

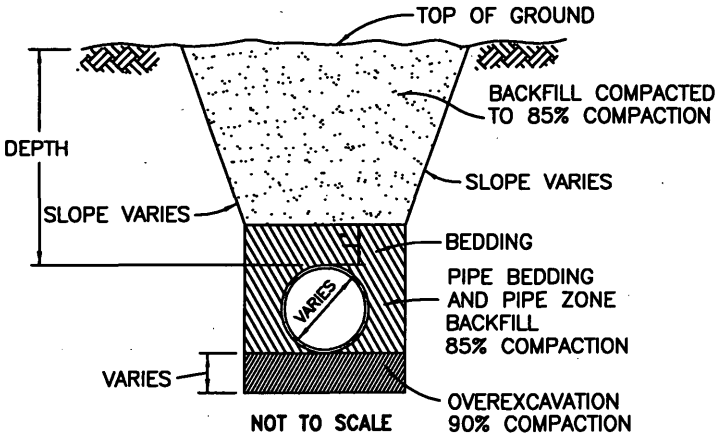

ROADSIDE STRIPS, MEDIANS & EASEMENTS

EXCAVATION FOR TRENCHES
< 15 '-1" IN DEPTH
REFER TO NOTE-3 FOR SPECIFICATION

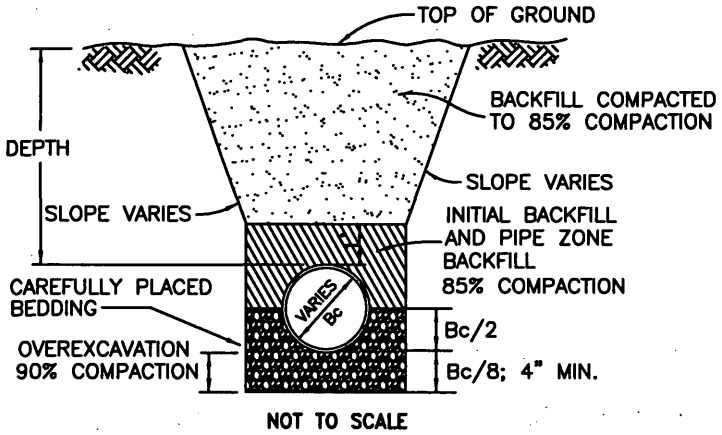

ROADSIDE STRIPS, MEDIANS & EASEMENTS

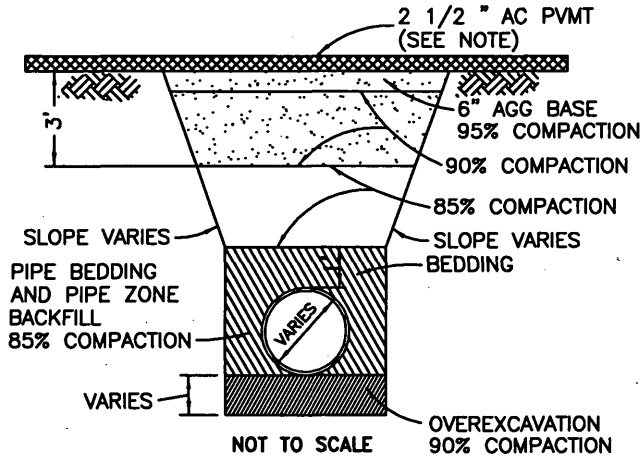

PAVED STREETS

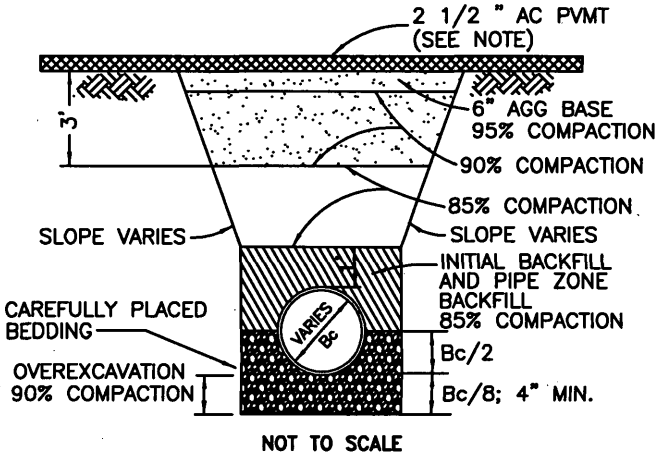

PAVED STREETS

NOTE:
1. OVER EXCAVATION IN UNSUITABLE MATERIALS SHALL BE PER SPECIFICATIONS.
2. SEE SPECIFICATION FOR PVMT REQUIREMENTS.
3. FOR SOIL CONDITIONS, WHICH WARRANT SPECIAL BEDDING SEE SSPWC 200-1.2 TABLE A 3/4 INCH.
4. ALL EXCAVATIONS SHALL CONFORM TO CONSTRUCTION SAFETY ORDERS, DIV. INDUSTRIAL SAFETY.
5. Bc = INTERIOR DIAMETER OF PIPE.

COACHELLA VALLEY WATER DISTRICT	
TRENCH BACKFILL DETAILS	
APPROVAL DATE: OCT 2005	S-7

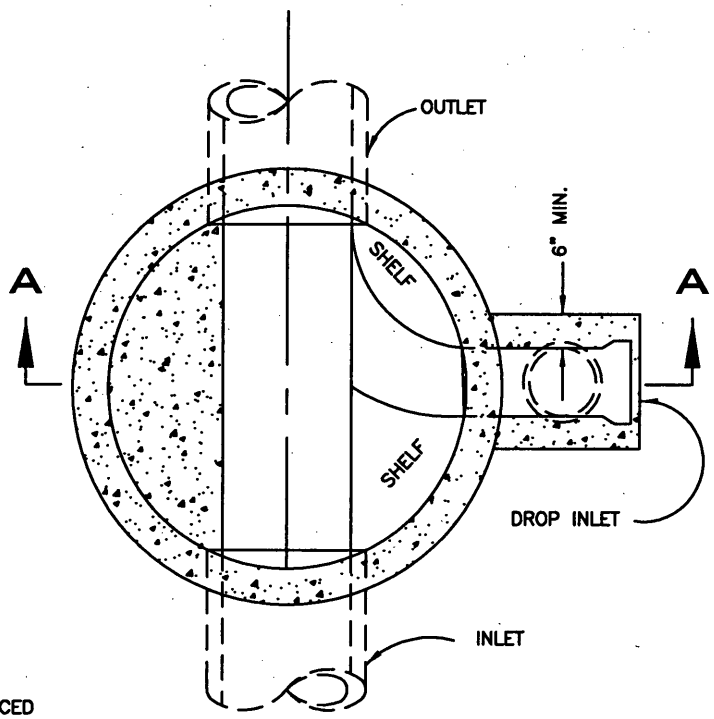

NOTE

MANHOLE DIMENSIONS AND REINFORCING SHALL BE PLACED AS SHOWN ON STANDARD DRAWING NO. S-5

PLAN SECTION

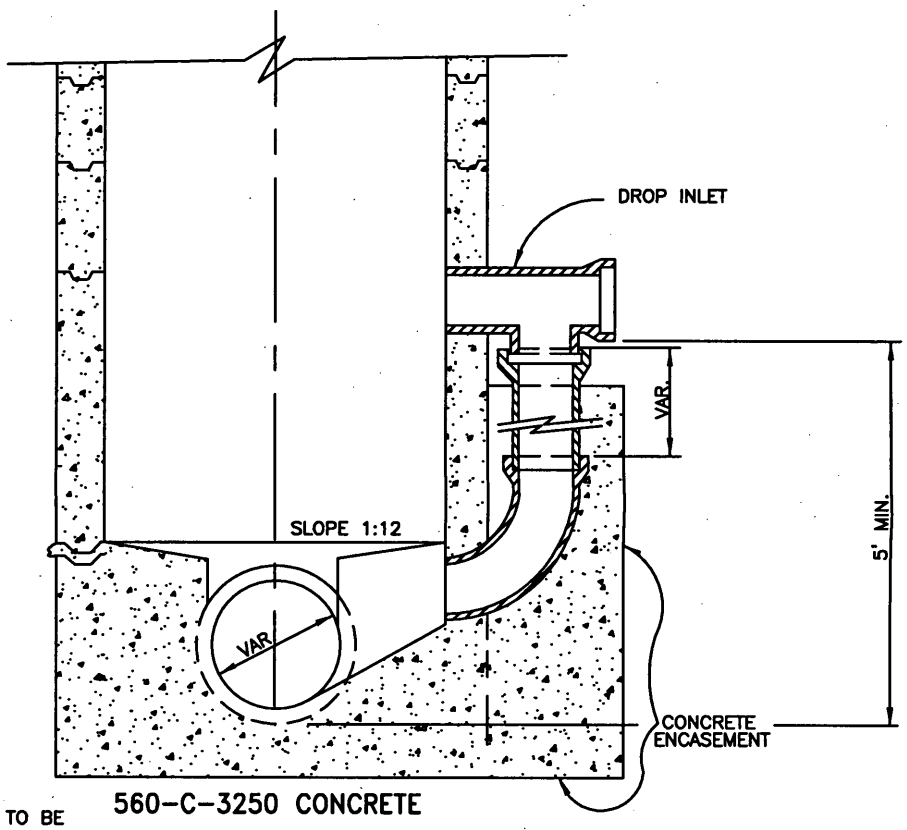

NOTE

CHANNEL OF MANHOLE BOTTOM TO BE FORMED IN CONCRETE, AND SIDE WALLS TO HAVE CHANNEL CURVED IN THE DIRECTION OF FLOW.
CHANNEL SHALL BE WELL DEFINED

SECTION A-A

COACHELLA VALLEY WATER DISTRICT

REINFORCED PRECAST CONCRETE DROP MANHOLE ECCENTRIC

APPROVAL DATE: OCT 2005

S-8A

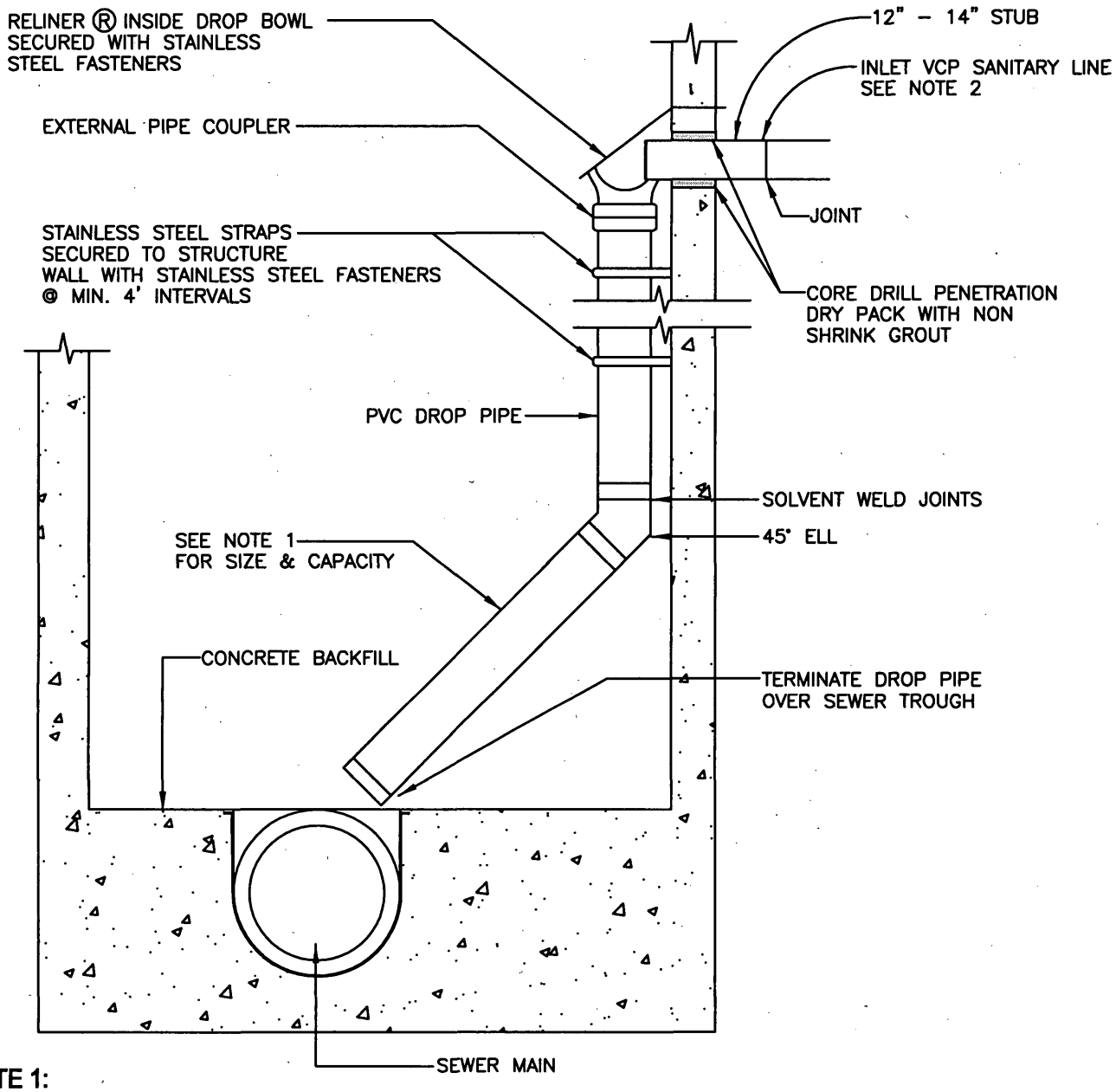

NOTE 1:

A SINGLE 4" DIA. DROP SHALL BE USED FOR A SINGLE 4" DIA. LATERAL
A SINGLE 6" DIA. DROP MAY BE USED FOR EITHER A SINGLE 6" DIA. LATERAL OR TWO 4" DIA. LATERALS ENTERING THE MANHOLE THROUGH A SINGLE PENETRATION. NO MORE THAN (2) 6" DIA DROPS OR 4 LATERALS MAY TERMINATE IN A MANHOLE. IN MULTIPLE LATERAL INSTALLATIONS EACH LATERAL SHALL NOT EXCEED 45° FROM EACH OTHER IN THE HORIZONATAL PLANE.

NOTE 2:

THIS DETAIL DRAWING IS FOR LATERAL SERVICE LINE CONNECTIONS TO SEWERS 20' IN DEPTH OR GREATER ONLY. FOR SEWERS OF LESS THAN 20' IN DEPTH SEE DETAIL DWG. NOS. S-9A, S-9B, S-9C, S-43, S-44 AND S-45

NOTE 3:

ALL LATERALS UTILIZING THIS DETAIL SHALL HAVE EMS MARKERS PLACED OVER THE LATERAL AT THE PROPERTY LINE OR EDGE OF PAVEMENT. SEE DETAIL DRAWING NO. S-9A FOR EMS MARKER PLACEMENT DETAILS

WATER DISTRICT	COACHELLA VALLEY WATER DISTRICT
	SEWER LATERAL DROP MANHOLE (FOR SEWERS OVER 20' DEEP)
	APPROVAL DATE: OCT 2005 — S-8B

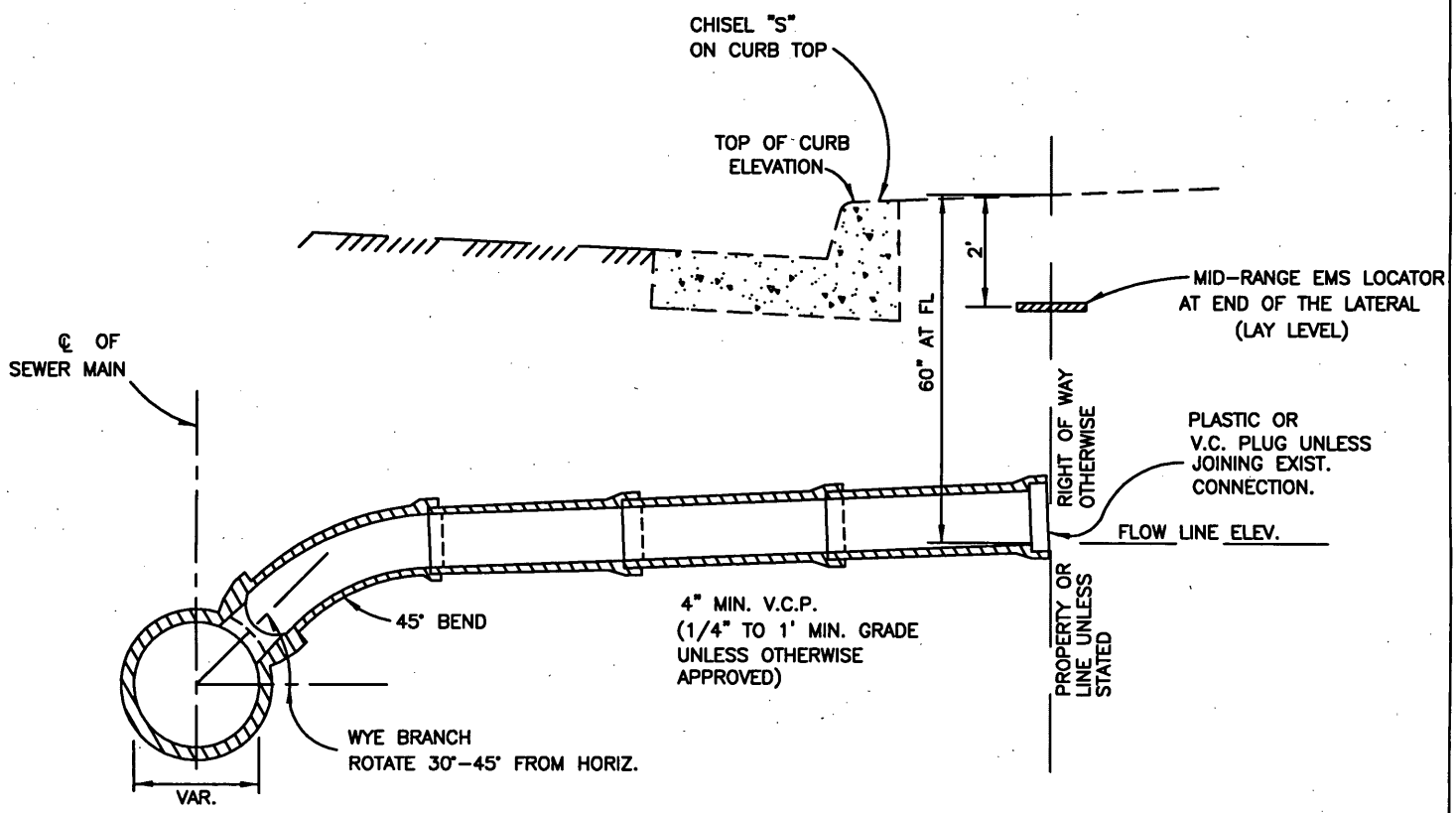

NOTE:

1. THE HOUSE LATERAL SHALL END AT THE PROPERTY LINE WHEN CURB DOES NOT EXIST.
2. THE HOUSE LATERAL SHALL END ONE FOOT BEYOND THE CURB WHERE CURB EXISTS.
3. 6" LATERALS REQUIRE A CLEAN OUT WITH RISER AT PROPERTY LINE OR TERMINUS.

COACHELLA VALLEY WATER DISTRICT	
STANDARD HOUSE LATERAL TYPE "A"	
APPROVAL DATE: OCT 2005	S-9A

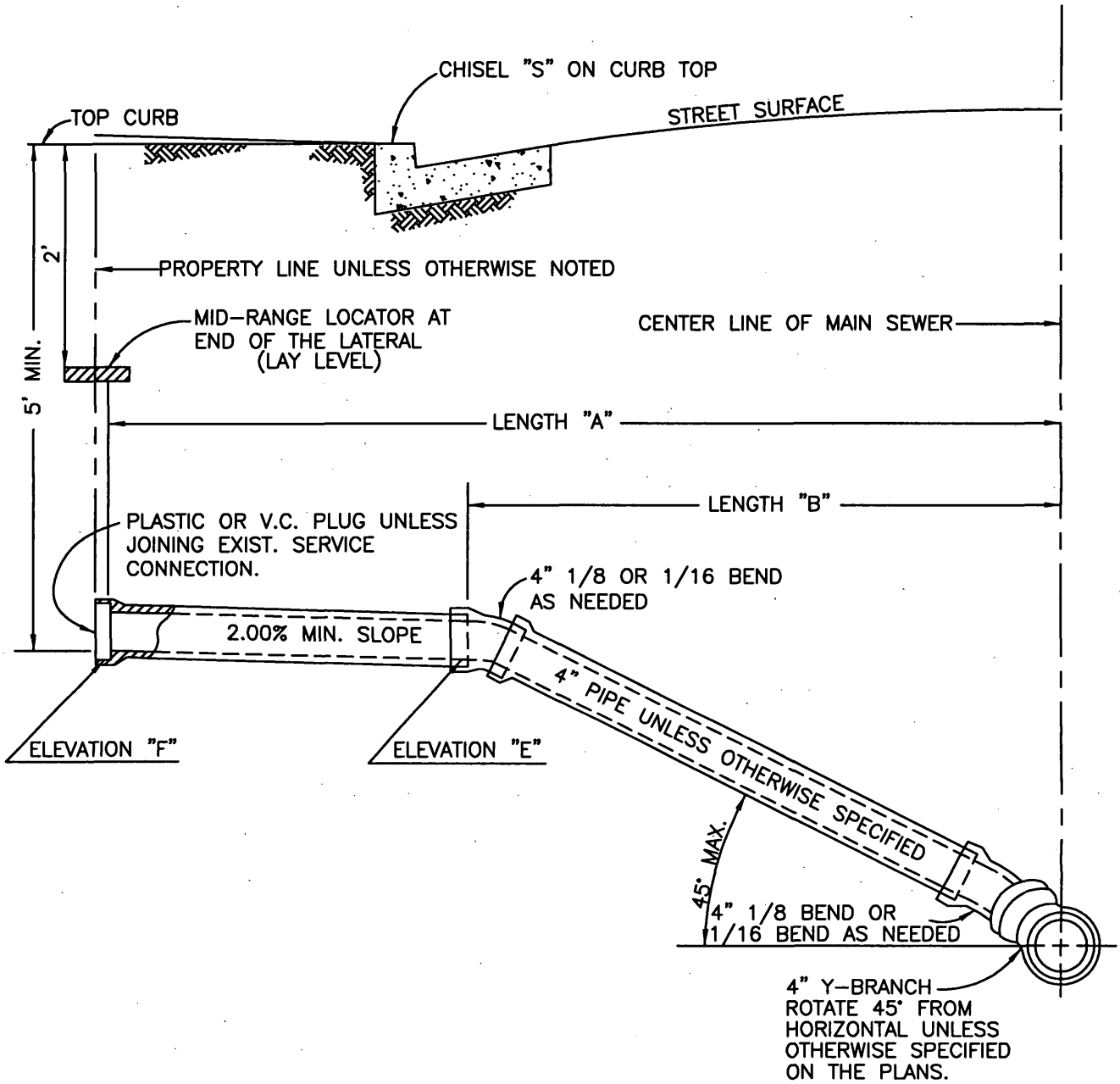

PROFILE

NOTES:

1. SEE SEWER CONSTRUCTION PLANS FOR LENGTH "A", LENGTH "B" AND ELEVATIONS "E" AND "F".
2. THE UPPER END OF THE HOUSE CONNECTION SHALL BE CAPPED WITH A PLASTIC STOPPER OR MECHANICAL PLUG.
3. PIPE FOR HOUSE CONNECTION SEWERS SHALL BE 4" CLAY PIPE UNLESS OTHERWISE SPECIFIED ON THE CONSTRUCTION PLANS.
4. THE HOUSE LATERAL WILL END AT PROPERTY LINE WHEN CURB DOES NOT EXIST.
5. THE HOUSE LATERAL WILL END ONE FOOT BEYOND CURB WHERE CURB EXISTS.
6. 6" LATERALS REQUIRE A CLEAN OUT AT PROPERTY LINE OR TERMINUS.

COACHELLA VALLEY WATER DISTRICT	
STANDARD HOUSE LATERAL TYPE "B"	
APPROVAL DATE: OCT 2005	S-9B

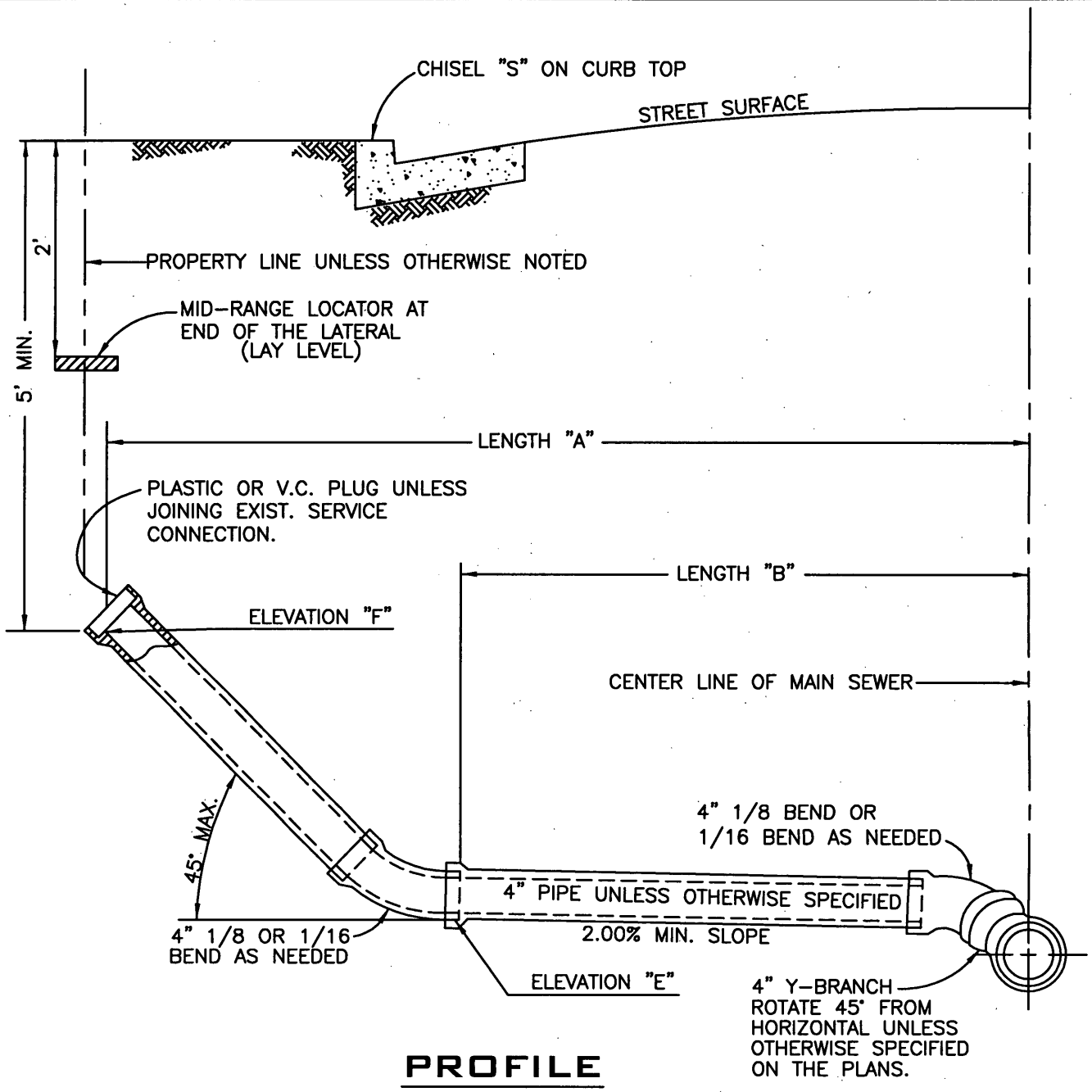

PROFILE

NOTES:

1. SEE SEWER CONSTRUCTION PLANS FOR LENGTH "A", LENGTH "B" AND ELEVATIONS "E" AND "F".
2. THE UPPER END OF THE HOUSE CONNECTION SHALL BE CAPPED WITH A PLASTIC STOPPER OR MECHANICAL PLUG.
3. PIPE FOR HOUSE CONNECTION SEWERS SHALL BE 4" CLAY PIPE UNLESS OTHERWISE SPECIFIED ON THE CONSTRUCTION PLANS.
4. SIX INCH DIA. LATERAL REQUIRES A STANDARD CLEAN-OUT, LOCATED AT THE PROPERTY LINE EDGE OF RIGHT OF WAY, OR BEHIND CURB FACE, WHICHEVER OCCURS NEAREST TO THE STREET SEWER.
5. 6" LATERALS REQUIRE A CLEAN OUT AT PROPERTY LINE OR TERMINUS.

COACHELLA VALLEY WATER DISTRICT	
STANDARD HOUSE LATERAL TYPE "C"	
APPROVAL DATE: OCT 2005	S-9C

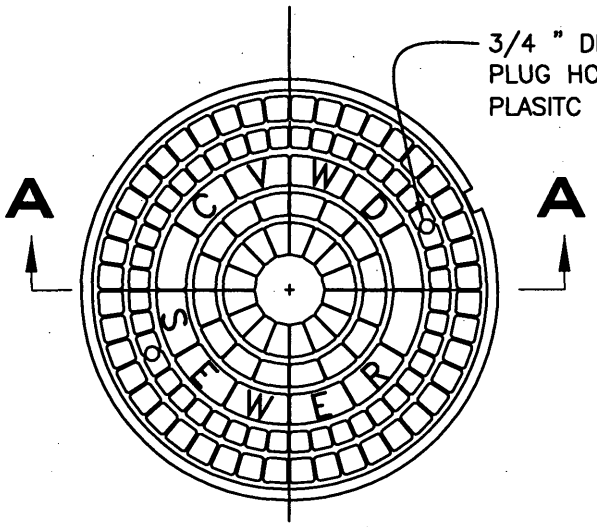

PLAN OF COVER
TOP VIEW

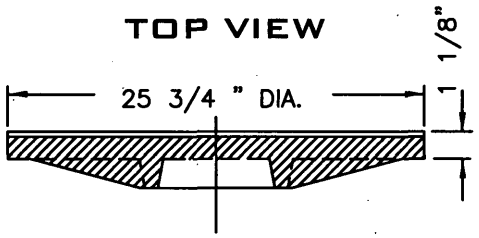

SECTIONAL ELEVATION A-A

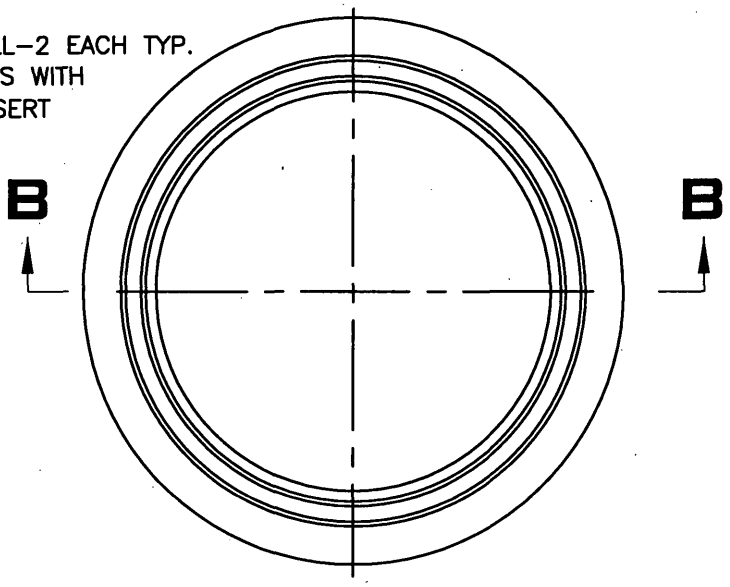

PLAN OF FRAME

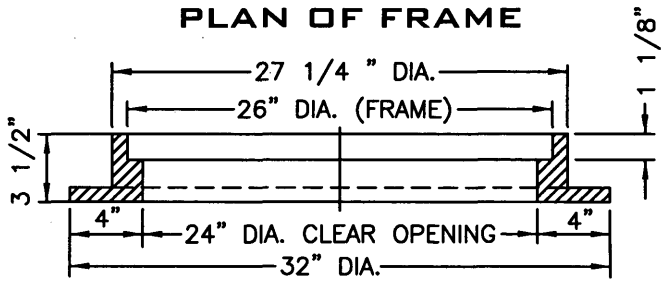

SECTIONAL ELEVATION B-B

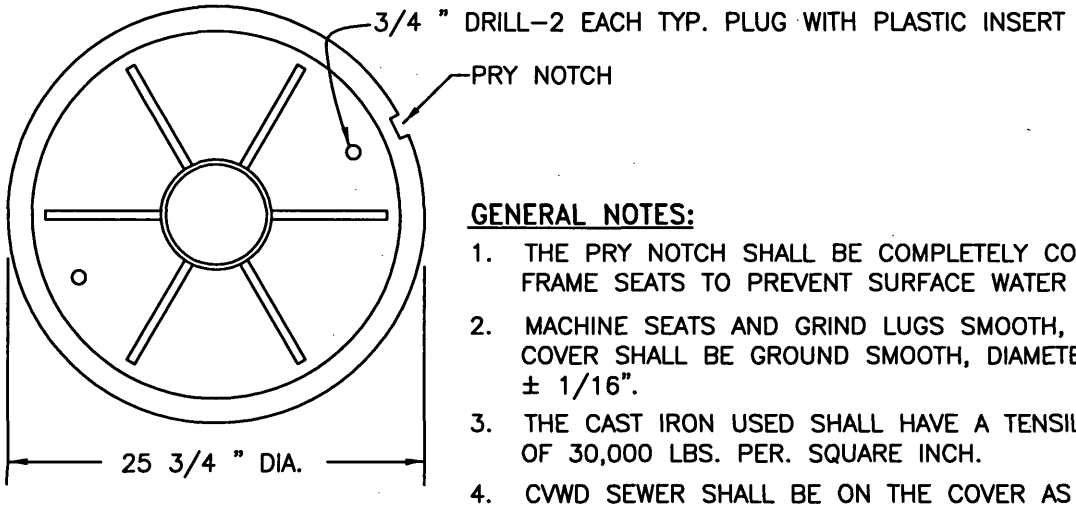

PLAN OF COVER
BOTTOM VIEW

GENERAL NOTES:

1. THE PRY NOTCH SHALL BE COMPLETELY COVERED BY THE. FRAME SEATS TO PREVENT SURFACE WATER INTRUSION.
2. MACHINE SEATS AND GRIND LUGS SMOOTH, PERIMETER OF COVER SHALL BE GROUND SMOOTH, DIAMETER TOLERANCE ± 1/16".
3. THE CAST IRON USED SHALL HAVE A TENSILE STRENGTH OF 30,000 LBS. PER. SQUARE INCH.
4. CVWD SEWER SHALL BE ON THE COVER AS SHOWN ABOVE.
5. MANHOLE COVER SHALL BE NON–ROCKING ALHAMBRA A–1254 OR APPROVED EQUAL.
6. SEALED MANHOLE COVER SHALL BE A–1254B OR APPROVED EQUAL.
7. TO BE USED ON 48" DIAMETER MANHOLE SHAFTING.

WATER DISTRICT	COACHELLA VALLEY WATER DISTRICT
	MANHOLE FRAME & COVER TYPE "A"
	APPROVAL DATE: OCT 2005 — S-10A

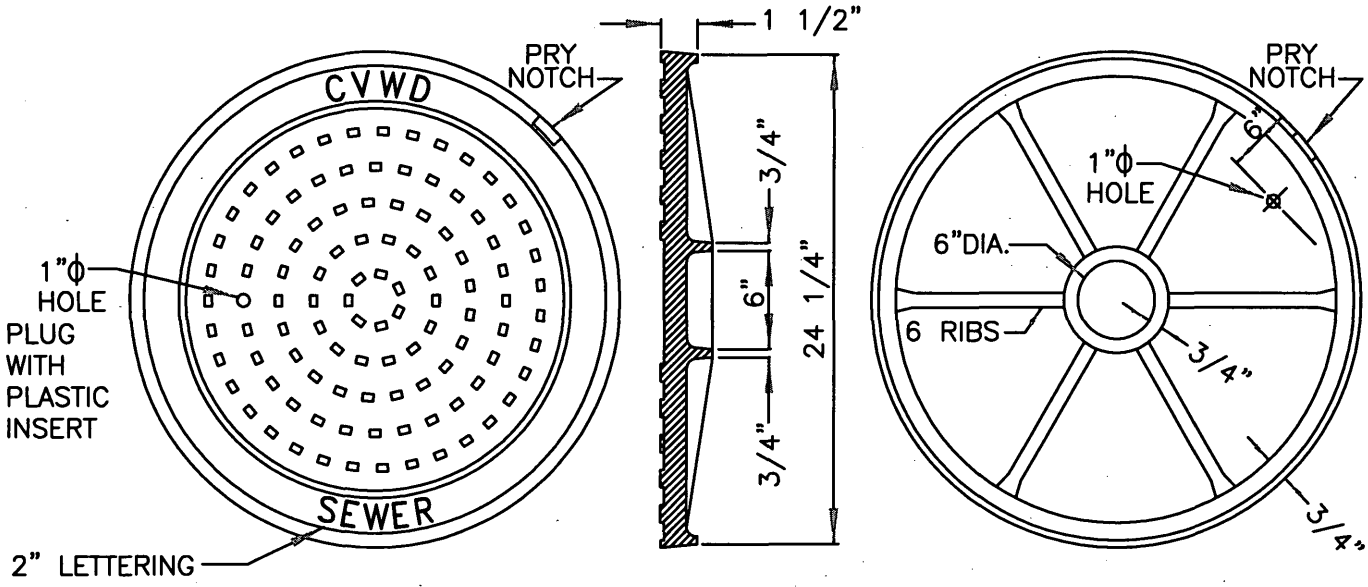

PLAN

COVER

GENERAL NOTES

1. THE PRY NOTCH SHALL BE COMPLETELY COVERED BY THE FRAME SEATS TO PREVENT SURFACE WATER INTRUSION.
2. MACHINE SEATS AND GRIND LUGS SMOOTH, DIAMETER TOLERANCE @ 1/8".
3. THE CAST IRON USED SHALL HAVE A TENSILE STRENGTH OF 30,000 LBS. PER. SQUARE INCH.
4. CVWD SEWER SHALL BE ON THE COVER AS SHOWN ABOVE.
5. MANHOLE COVER SHALL BE NON-ROCKING ALHAMBRA A-1325 OR APPROVED EQUAL.
6. SEALED MANHOLE COVER SHALL BE ALHAMBRA A-1251 B-6 OR APPROVED EQUAL.
7. TO BE USED ON 60" AND 72" DIAMETER MANHOLE SHAFTING.

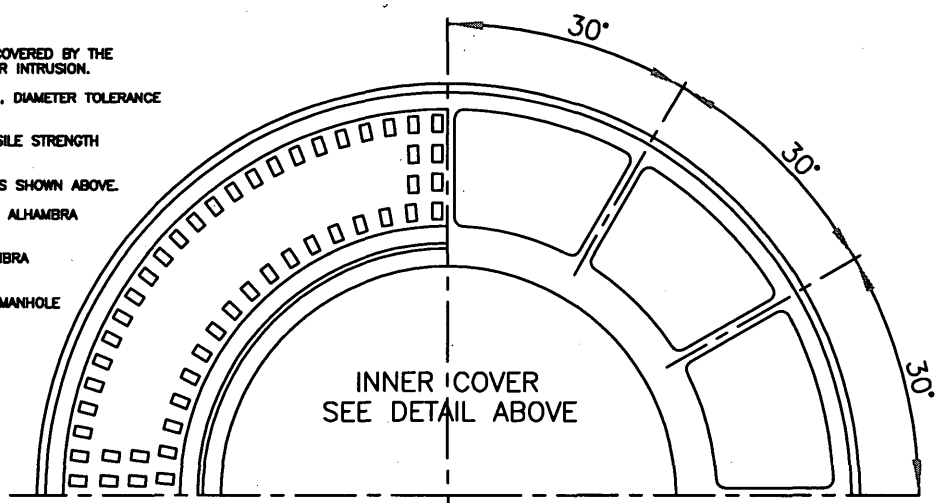

PLAN

BOTTOM VIEW

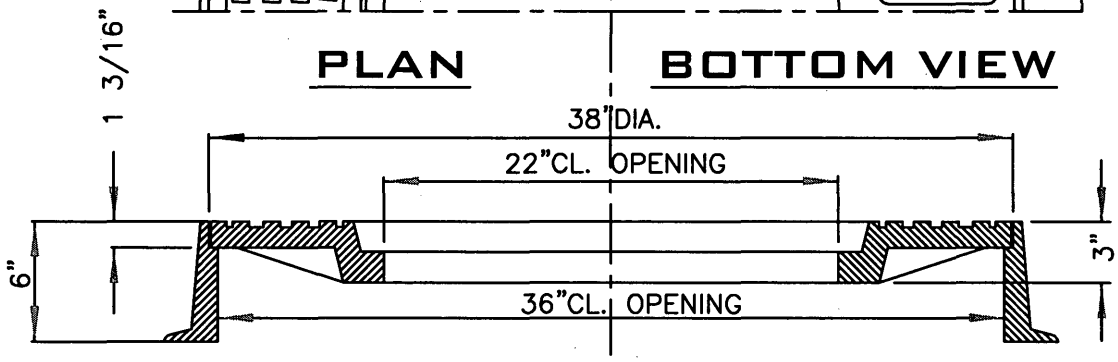

A-1325 COVER

COACHELLA VALLEY WATER DISTRICT	
MANHOLE FRAME & COVER TYPE "B"	
APPROVAL DATE: OCT 2005	S-10B

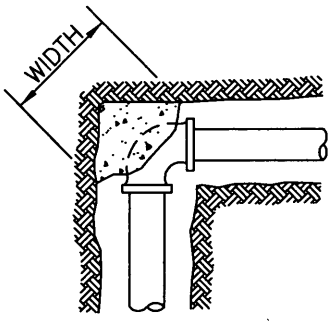

BEND

VALVES

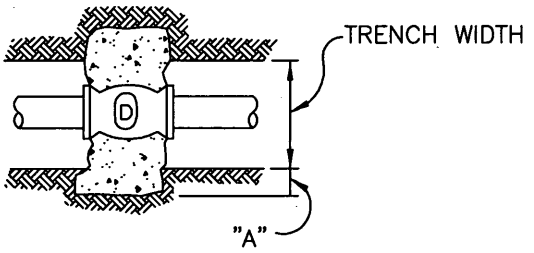

PLAN

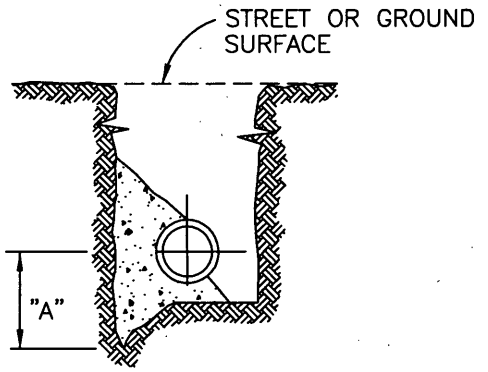

TYPICAL SECTION

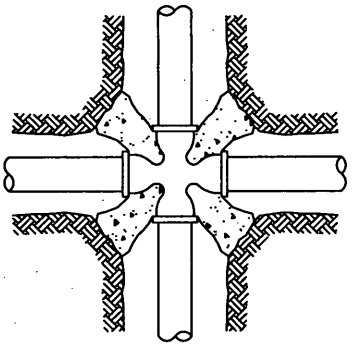

CROSS

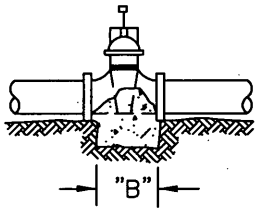

ELEVATION

SECTION:
A= 6" FOR 6"–8" PIPE
12" FOR 12" PIPE
18" FOR 18" PIPE

B= TO CLEAR BELLS OR FLANGES

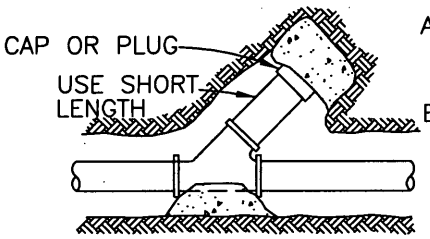

WYE
(SHOWN WITH BRANCH CLOSED)

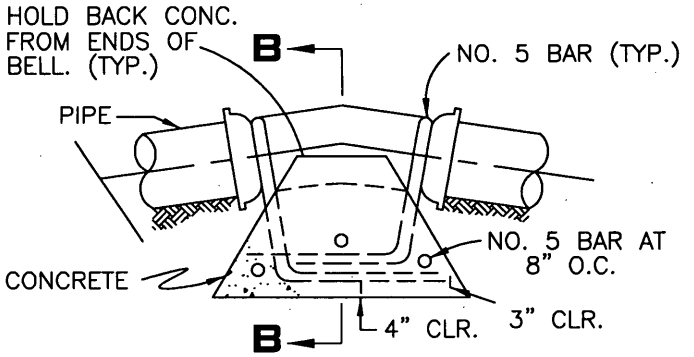

SECTIONAL ELEVATION

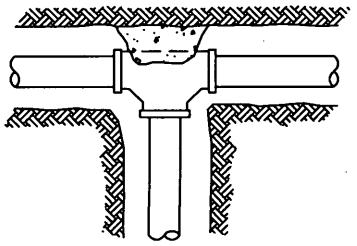

TEE

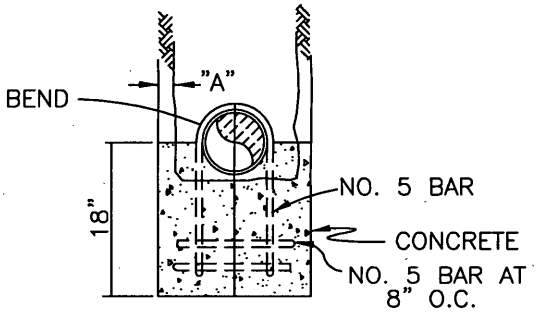

SECTION B-B
VERTICAL ANCHOR BLOCK

NOTES:

BEARING AREA FOR THRUST BLOCKS SHALL DEPEND ON PRESSURE AND PIPE SIZE.

FOR BEARING AREAS SEE DETAIL DRAWING W–20/S–20.

CONCRETE THRUST BLOCKS SHALL BE CONSTRUCTED OF 420–B–2000 CONCRETE.

WATER DISTRICT	COACHELLA VALLEY WATER DISTRICT
	DETAIL OF CONCRETE THRUST BLOCKS
	APPROVAL DATE: OCT 2005 — W-19/S-19

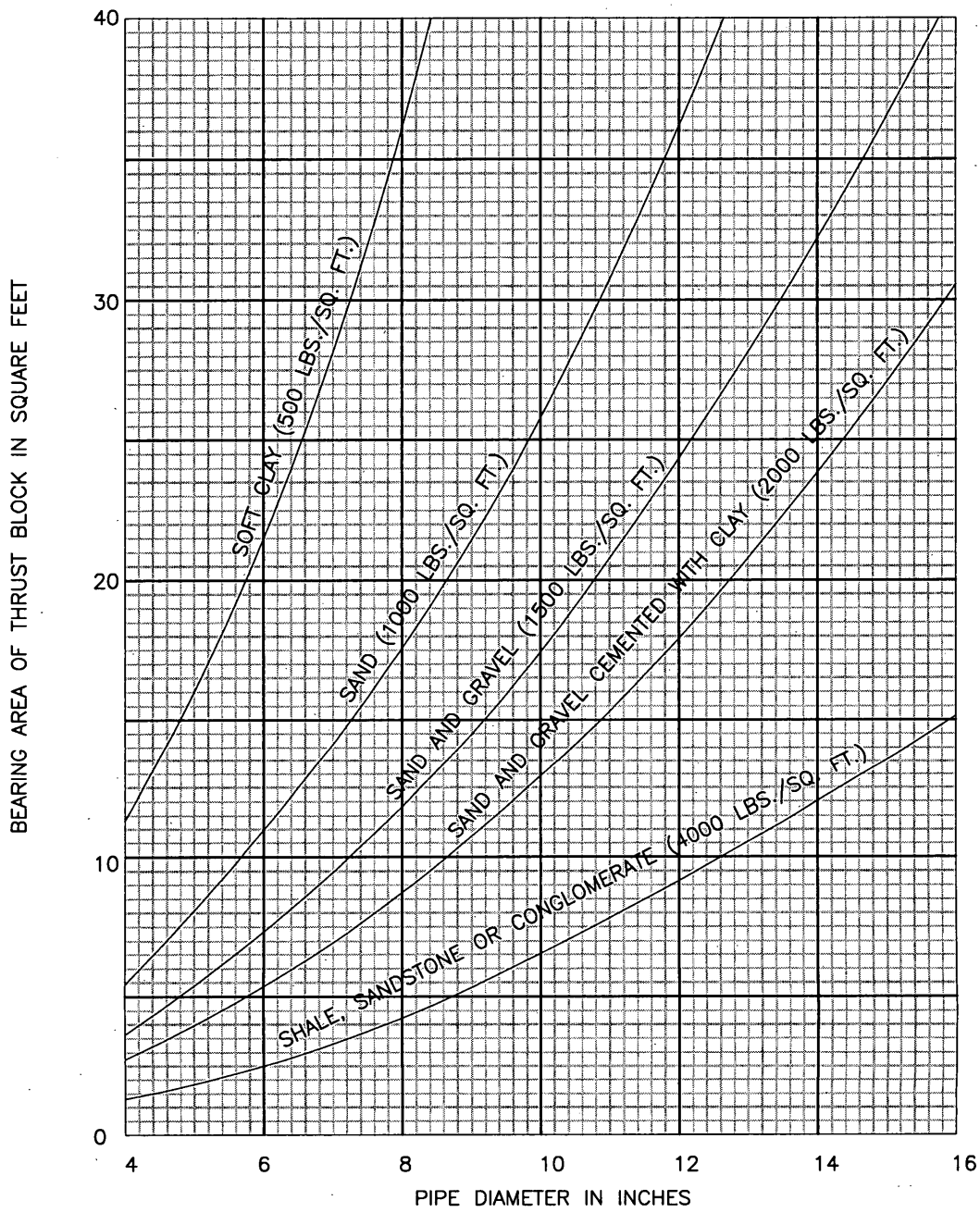

NOTES:

1. BASED ON A 225 PSI TEST PRESSURE AND BEARING VALUES OF DRY SOILS.
2. VALUES FROM CURVES ARE FOR TEES AND DEAD ENDS I.E. STRAIGHT LINE THRUST.
   FOR 90° BENDS: 1.4 X VALUE FROM CURVE.
   FOR 45° BENDS: 0.8 X " " "
   FOR 22-1/2° 0.4 X " " "
3. FOR CONDITIONS NOT COVERED BY CURVES, THRUST DEVICES MUST BE APPROVED BY THE ENGINEER.
4. FOR LOCATION OF THRUST BLOCKS SEE DETAIL DRAWING W-19/S-19.
5. CONCRETE THRUST BLOCKS SHALL BE CONSTRUCTED OF 420-B-2000 CONCRETE.

W-20/S-20

COACHELLA VALLEY WATER DISTRICT

THRUST BLOCK BEARING AREAS

APPROVAL DATE: OCT 2005 | W-20/S-20

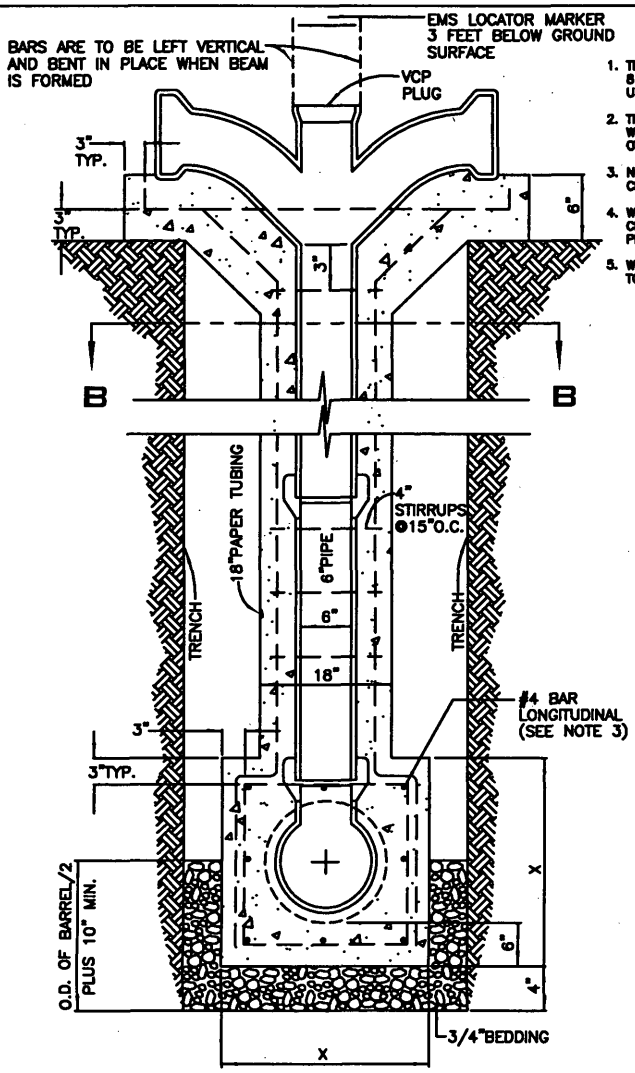

SECTION A-A

NOTES

1. THE UPPER END OF THE CHIMNEY PIPE SHALL BE 8 FEET BELOW THE GRADE OF THE LOWER CURB UNLESS OTHERWISE SPECIFIED.
2. THE CHIMNEY PIPE SHALL BE VITRIFIED CLAY PIPE WITH MECHANICAL COMPRESSION JOINTS UNLESS OTHERWISE SPECIFIED ON PLANS.
3. NO CONNECTION IS PERMITTED DIRECTLY TO TOP OF CHIMNEY PIPE.
4. WHERE ONE HOUSE LATERAL IS TO BE JOINED TO THE CHIMNEY PIPE, USE A SINGLE "Y" AND FACE "Y" TOWARDS PROPERTY TO BE SERVED.
5. WHERE TWO OR MORE HOUSE LATERALS ARE TO BE JOINED TO THE CHIMNEY PIPE, INSTALL "Y" BRANCHES AS FOLLOW:

   FOR TWO HOUSE LATERALS WITH ONE FACING EACH SIDE OF STREET, USE A DOUBLE "Y" BRANCH.

   FOR TWO HOUSE LATERALS FACING THE SAME SIDE OF THE STREET, USE TWO SINGLE "Y" BRANCHES FACING THE PROPERTY SERVED.

   FOR THREE OR FOUR HOUSE LATERALS, USE TWO DOUBLE "Y" BRANCHES PLACED AT 30° WITH EACH OTHER.

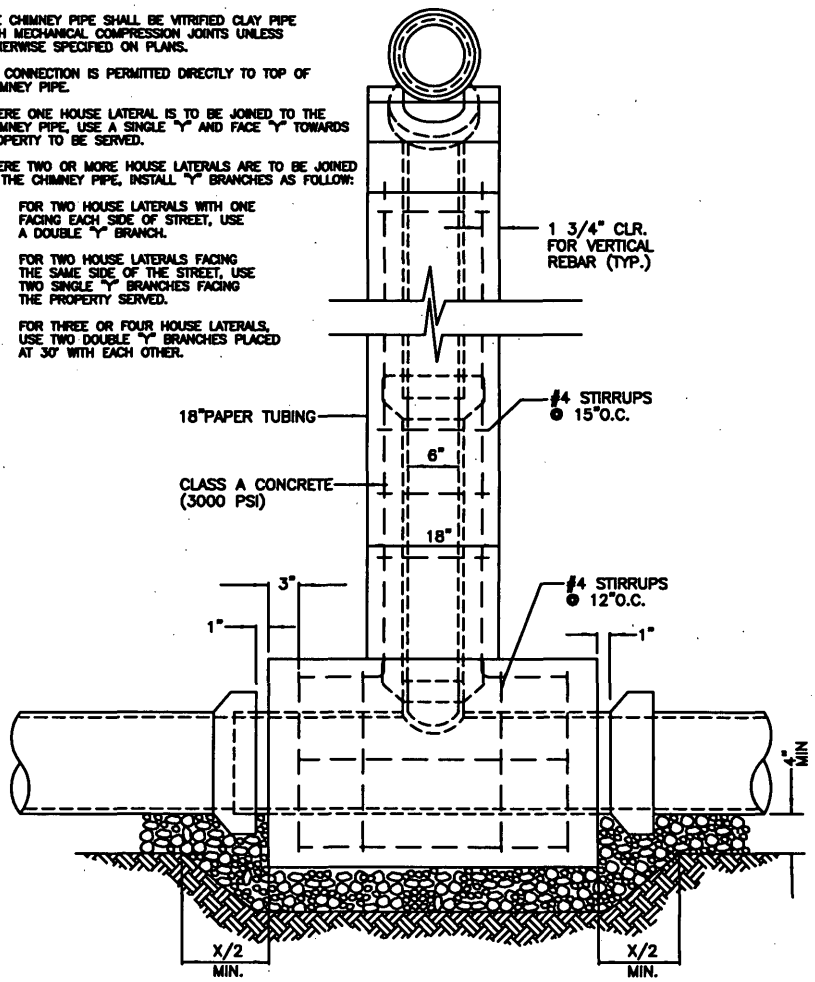

GENERAL NOTES

1. THE FITTING SHALL BE A MINIMUM OF FIVE (5) FEET IN LENGTH WITH THE TEE APPROXIMATELY CENTERED.
2. ALL REBARS ARE #4 BARS AND SHALL BE FABRICATED AND PLACED IN POSITION PER A.C.I. SPECIFICATION.
3. FOR MAINLINE ENCASEMENT USE 8-#4 BARS EQUALLY SPACED FOR PIPE EQUAL TO OR LARGER THAN 15" DIA.

   OR

   USE 4-#4 LONGITUDINAL BARS EQUALLY SPACED FOR PIPE SMALLER THAN 15" DIA.

MAINLINE PIPE DIA.	X
8"	22"
10"	25"
12"	27"
15"	31"
18"	34"

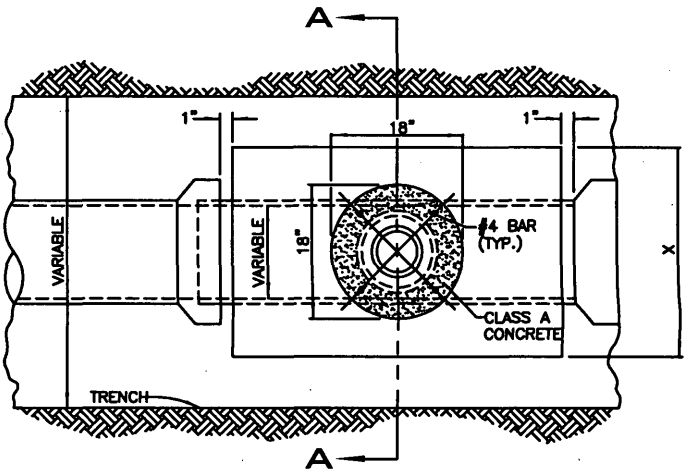

SECTION B-B

COACHELLA VALLEY WATER DISTRICT

CHIMNEY PIPE AND BASE

APPROVAL DATE: OCT 2005

S-24

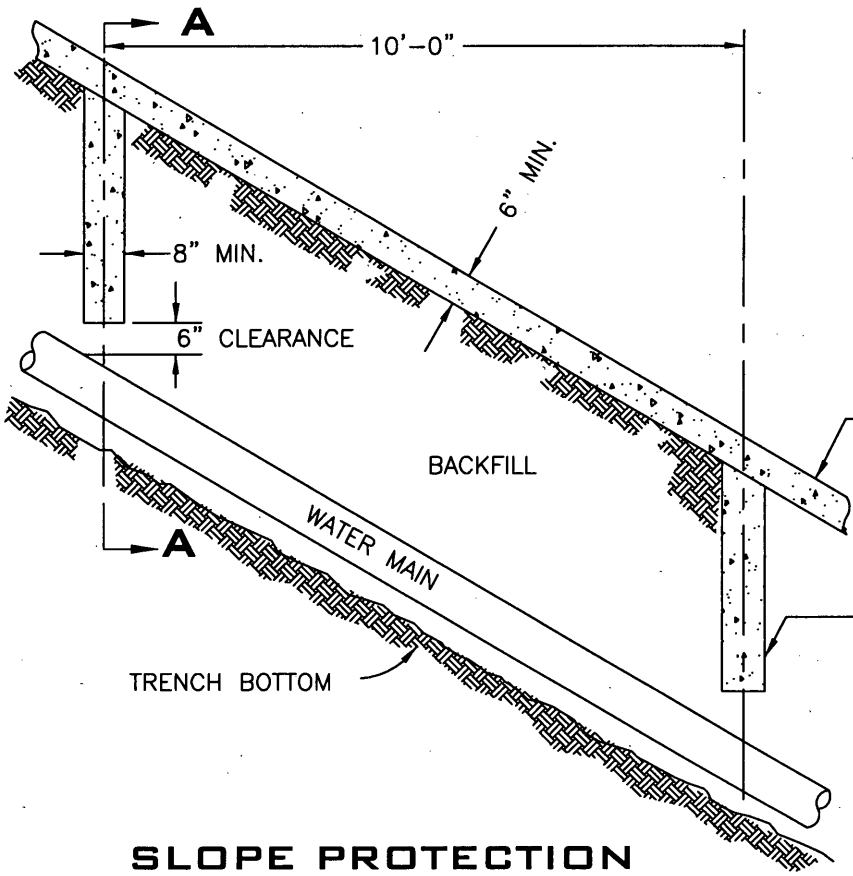

SLOPE PROTECTION FOR GRADES OVER 50%

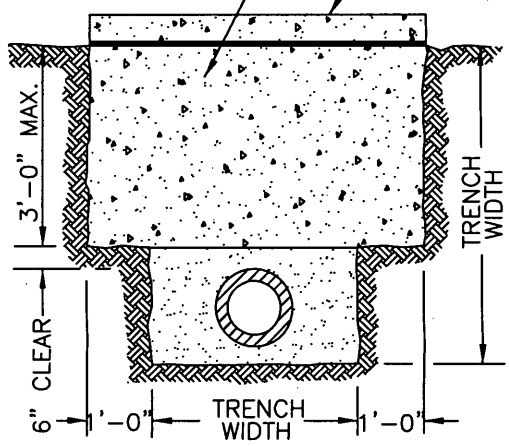

SECTION A-A

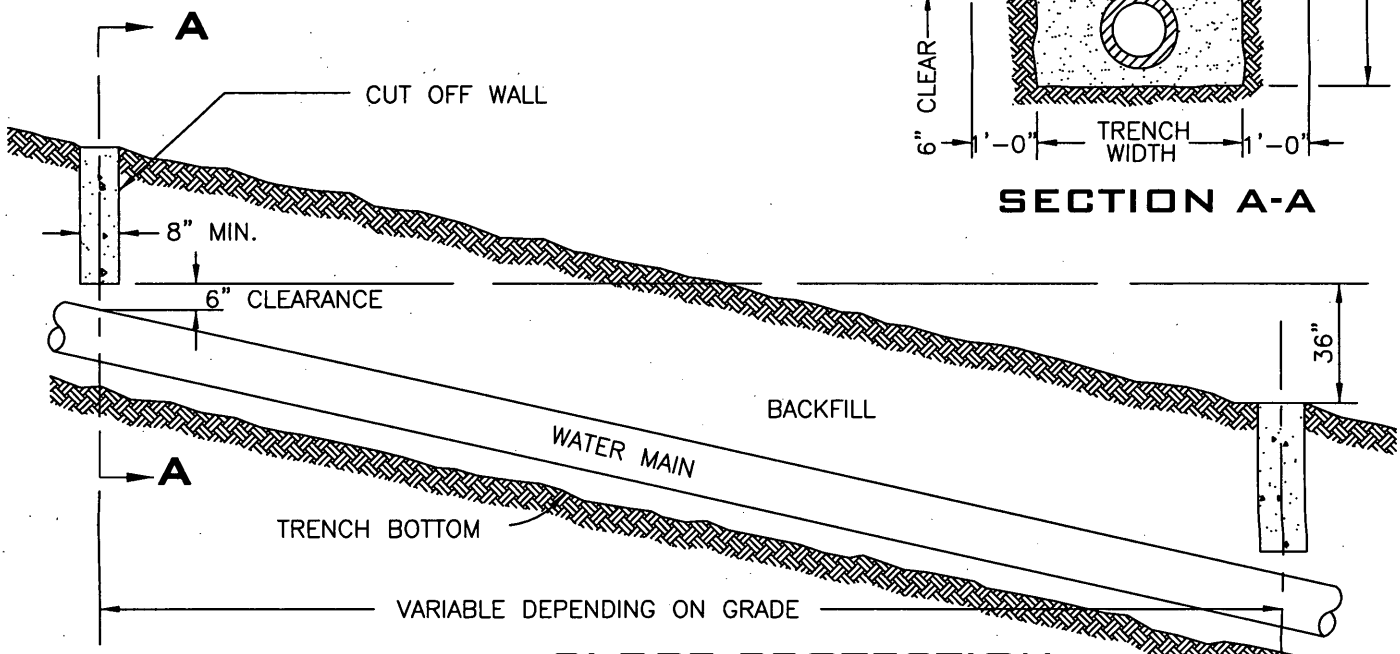

SLOPE PROTECTION FOR GRADES 15% TO 50%

REF: SEE ARTICLE TC-12

COACHELLA VALLEY WATER DISTRICT

DETAIL OF SLOPE PROTECTION

APPROVAL DATE: OCT 2005 | W-26/S-26

TYPICAL INSTALLATION (STREET OR ALLEY)

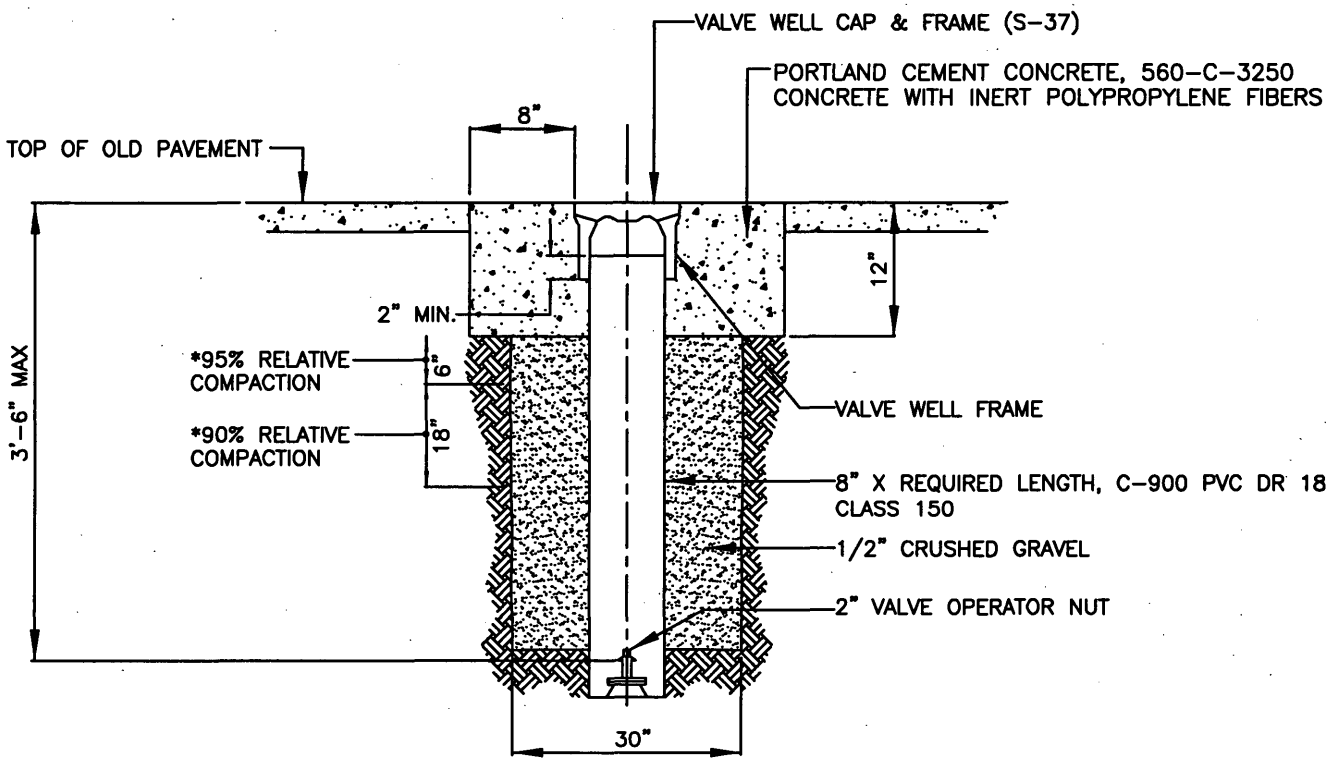

TYPICAL INSTALLATION PAVED AREA

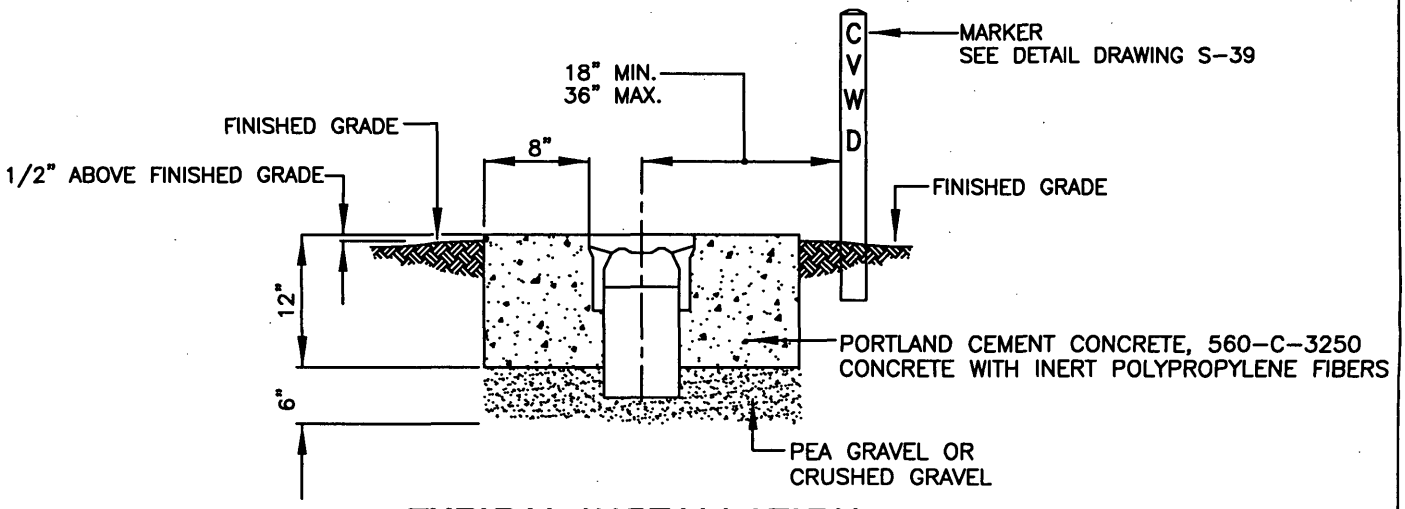

TYPICAL INSTALLATION UNPAVED AREAS

NOTE:

WHERE VALVE OPERATING NUT IS GREATER THAN 48" BELOW THE SURFACE AN EXTENSION ROD FOR VALVE OPERATION, WITH ATTACHED CIRCULAR CENTERING GUIDE, SHALL BE REQUIRED. THE TOP OF THE EXTENSION ROD SHALL BE MIN. 24" AND MAX. 48" BELOW THE SURFACE.

FOR VALVE OPERATOR WELL CAP & FRAME SEE DETAIL DRAWING S-37

FOR MARKER SEE DETAIL DRAWING S-39

COACHELLA VALLEY WATER DISTRICT	
DETAIL OF VALVE OPERATOR WELL INSTALLATION	
APPROVAL DATE: OCT 2005	S-36

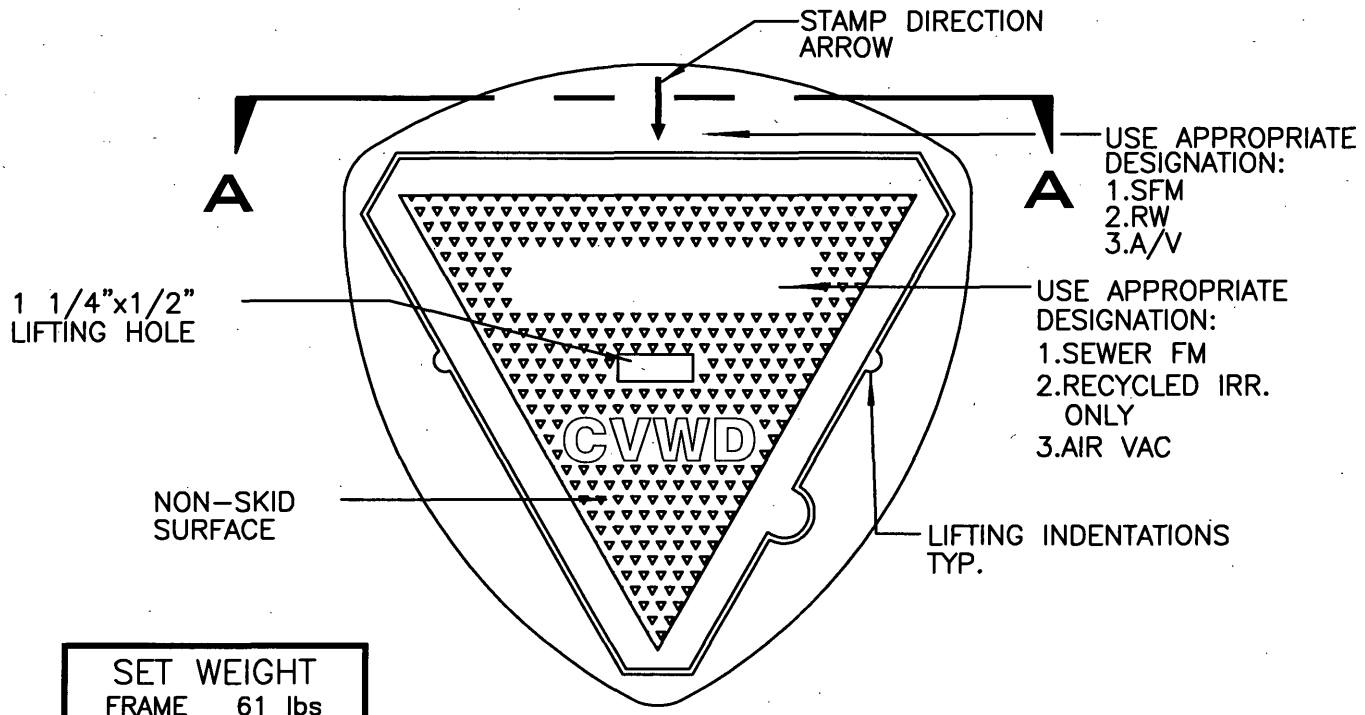

SET WEIGHT	
FRAME	61 lbs
LID	15 lbs
TOTAL	76 lbs

PLAN VIEW

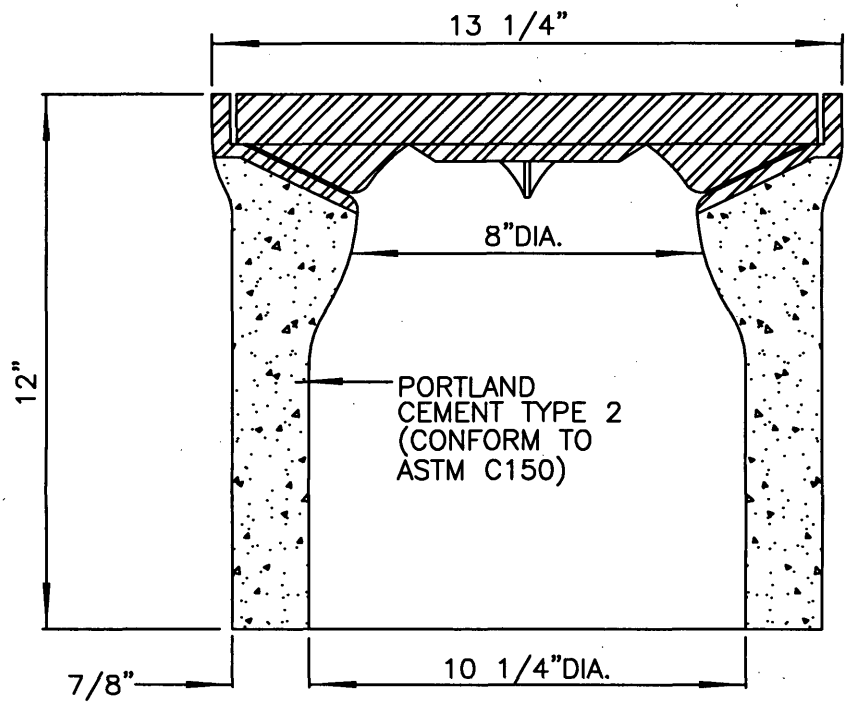

SECTION A-A

NOTES:

1. ALL METALLIC MATERIALS SHALL BE CAST IRON OR DUCTILE IRON
2. FRAME AND LID SHALL HAVE CAST SEAT AND SIDE TO ASSURE CLOSE FIT.
3. CASTING SHALL BE DIPPED IN BLACK BITUMINOUS PAINT.
4. FOR INSTALLATION, SEE DETAIL DRAWING S-36.
5. FRAME AND LID SHALL EQUAL OR EXCEED H-20 WHEEL LOADING.
6. APPROVED MODELS:
   4CV LID &
   4CV FRAME W/CONCRETE
   AS MANUFACTURED BY
   SOUTH BAY FOUNDRY OR EQUAL
7. LID SHALL BE PAINTED IRVINE PURPLE NO. 74-R0-641 BY TNEMEC OR EQUAL IF USED FOR RECYCLED WATER SERVICE

WATER DISTRICT

COACHELLA VALLEY WATER DISTRICT

DETAIL OF
VALVE OPERATOR WELL CAP
AND FRAME

APPROVAL DATE: OCT 2005 | S-37

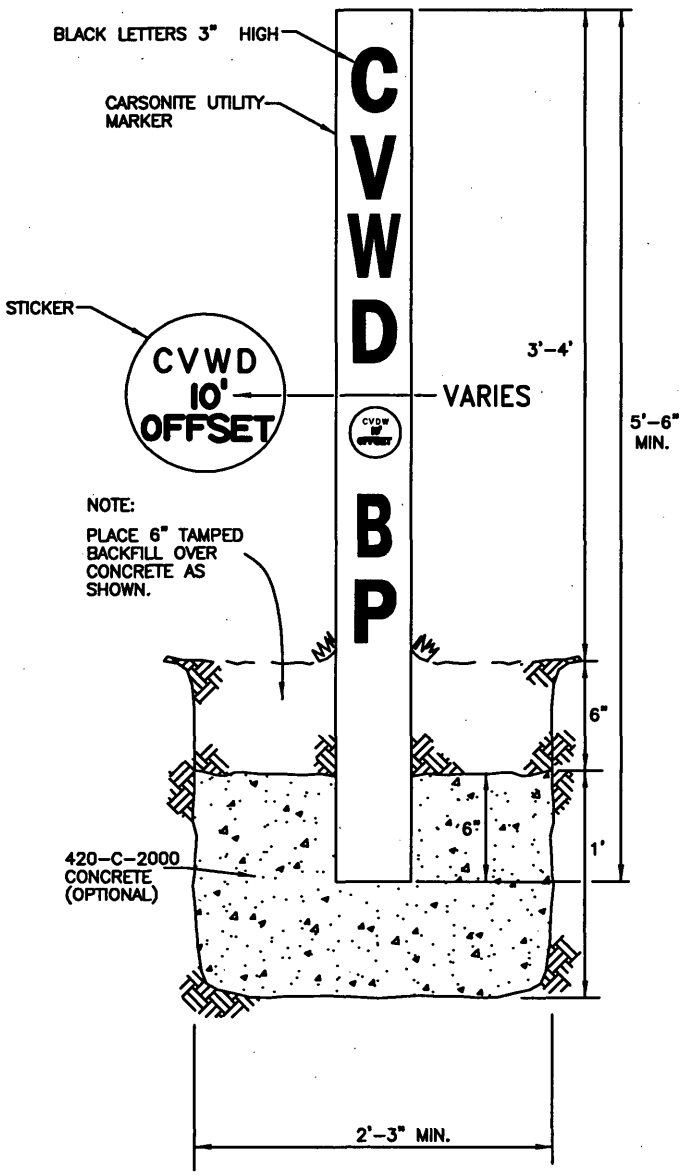

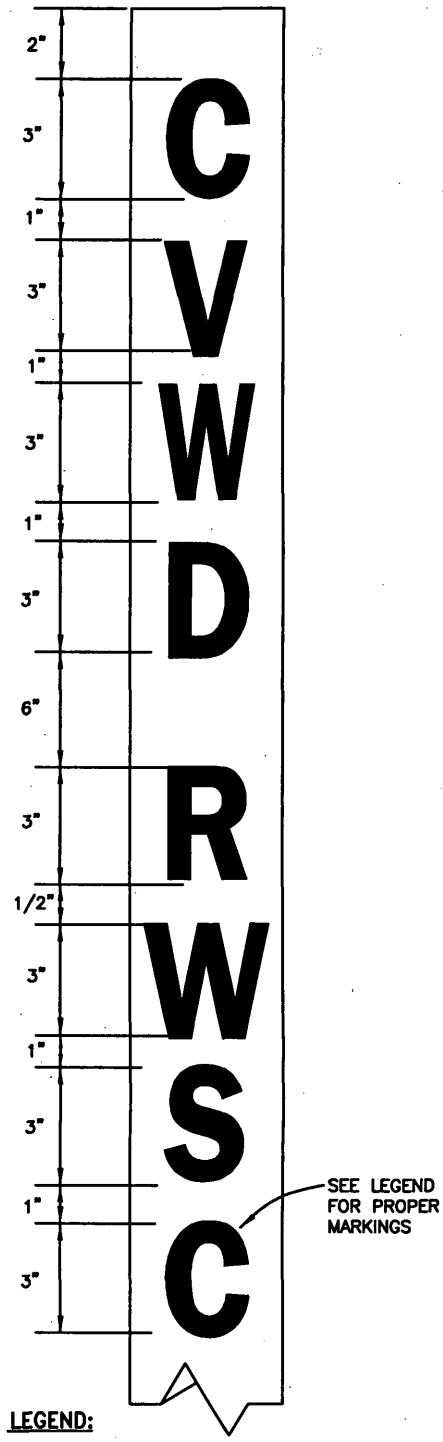

LEGEND:

B.O.	=	BLOW-OFF
A.V.	=	AIR-VAC RELIEF VALVE
R/W S.C.	=	RIGHT OF WAY STORM CHANNEL
W.L.	=	WATER LINE
G.V.	=	GATE VALVE
P.R.	=	PRESSURE REGULATOR
L.V.	=	LINE VALVE
M.H.	=	MANHOLE
C.P.T.S.	=	CATHODIC PROTECTION TEST STATION
B.P.	=	BURIED PIPE

COACHELLA VALLEY WATER DISTRICT

DETAIL OF
CARSONITE UTILITY MARKER

APPROVAL DATE: OCT 2005 | W-27/S-39

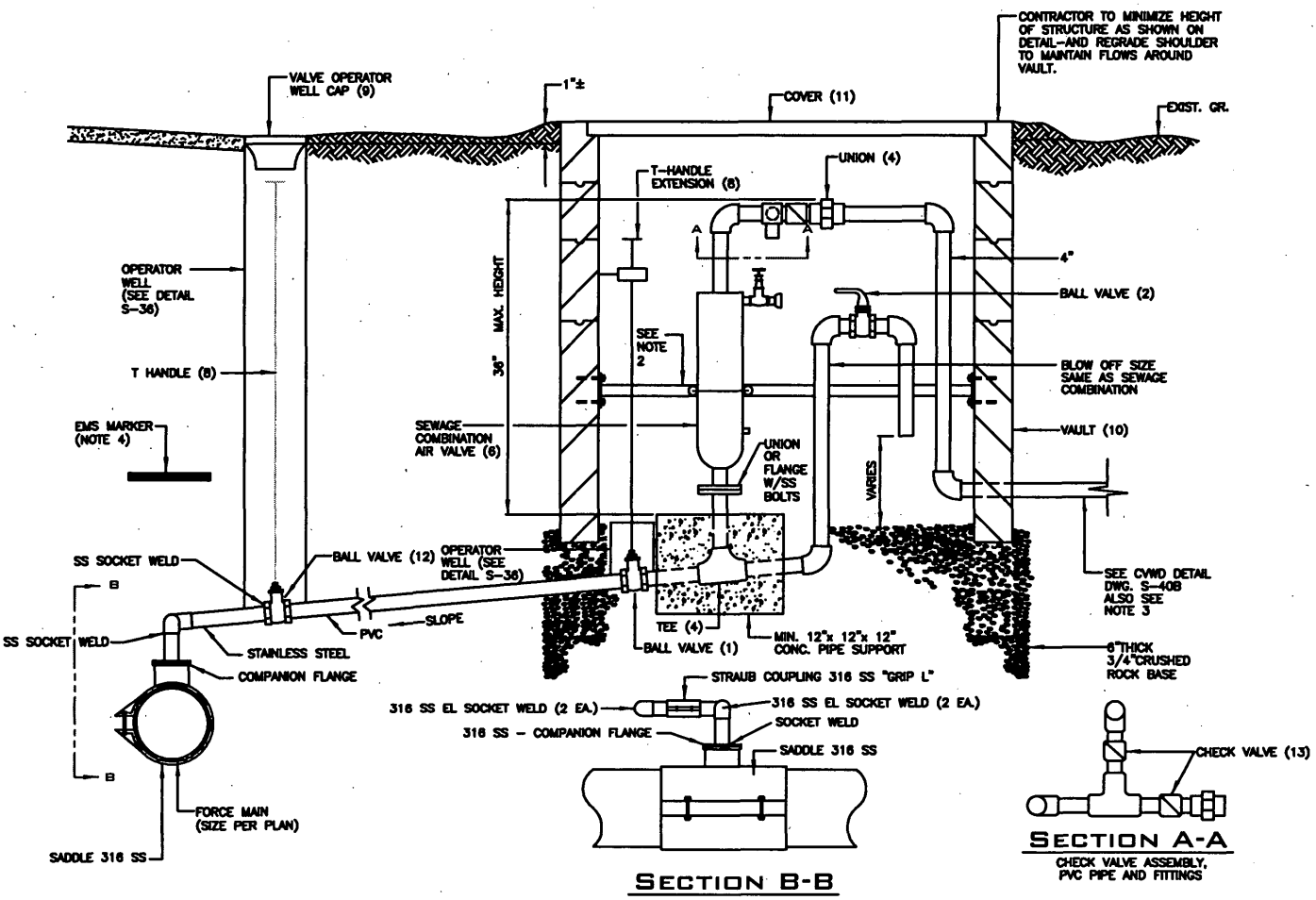

MATERIAL SCHEDULE

1	BALL VALVE, BURIED	304 STAINLESS STEEL OR PVC, INDUSTRIAL DUTY, FOR BURIED CORROSIVE SERVICE, AND CAPTIVE T-HANDLE EXTENSION, AS SHOWN.
2	BALL VALVE, NON BURIED	304 STAINLESS STEEL OR PVC INDUSTRIAL DUTY W/OPERATING LEVER
3	COVER AND VAULT INTERIOR	COAT ENTIRE INTERIOR INCLUDING UNDERSIDE OF COVER WITH 50 MIL HIGH-BUILD POLYURETHANE (SANCON OR APPROVED EQUAL)
4	PIPE AND FITTINGS	SCHEDULE 80 PVC, SOLVENT WELD OR THREADED, 225 PSI MINIMUM OPERATING PRESSURE
5	TAPPED REPAIR CLAMP OR TAPPING SLEEVE	ALL STAINLESS STEEL GRADE 18-8, TYPE 304, FULL CIRCLE TYPE. 4" DIA. AND LARGER TAP SHALL BE FLANGED
6	SEWAGE COMBINATION AIR VALVE, TRIM AND HARDWARE	STAINLESS STEEL VENT-O-MAT 050RGX1021 W/TOP OUTLET OR A.R.I. D-020 (SIZE PER PLAN)
7	SWING JOINT ASSEMBLY	SCHEDULE 80 TYPE 316 STAINLESS STEEL WELDED
8	T-HANDLE	STAINLESS STEEL, SHALL BE MARKED OR TAGGED "1/4 TURN OFF"
9	VALVE OPERATOR WELL CAP	SEE C.V.W.D. STANDARD DETAIL S-37
10	VAULT	BROOKS 4'-6" X 6'-6" CONCRETE OR EQUAL VAULT
11	VAULT COVER	H20 GALVANIZED 2 PIECE STEEL COVER WITH SUPPORT BEAM
12	BALL VALVE, BURIED	304 STAINLESS STEEL WITH CAPTIVE T-HANDLE EXTENSION AS SHOWN
13	CHECK VALVE	ALL 316 STAINLESS STEEL OR PVC SWING CHECK VALVE (OUTSIDE LEVER AND WEIGHT OR SPRING)

NOTES

1. ALL ITEMS REQUIRE APPROVAL BY CVWD PROJECT ENGINEER BEFORE INSTALLATION
2. SECURE WITH STRUT AND U-BOLT, GALVANIZED. USE 3/8" STAINLESS STEEL HILTI QUICK STUDS, 2 EA. AT WALL FACE. STRUT MAY BE COATED AFTER INSTALLATION.
3. DISCHARGE TO ADJACENT SEWER MANHOLE MAY BE PERMITTED WITH CVWD APPROVAL.
4. PLACE EMS MARKER OVER MAIN BETWEEN 2 AND 3 FEET IN DEPTH AS SHOWN
5. THE DIAMETER OF THE PIPING AND APPURTENANCES SHALL BE THE SAME SIZE OR LARGER THAN THE SPECIFIED SIZE OF THE AIR RELEASE AND AIR/VAC ASSEMBLY
6. THE SIZE OF THE AIR RELEASE AND AIR/VAC ASSEMBLIES ARE IDENTIFIED ON THE PLANS OR SPECIFICATIONS.

COACHELLA VALLEY WATER DISTRICT

DETAIL OF

OFFSET SEWAGE FORCE MAIN

AIR RELEASE & AIR/VAC ASSEMBLY

APPROVAL DATE: OCT 2005 | S-40A

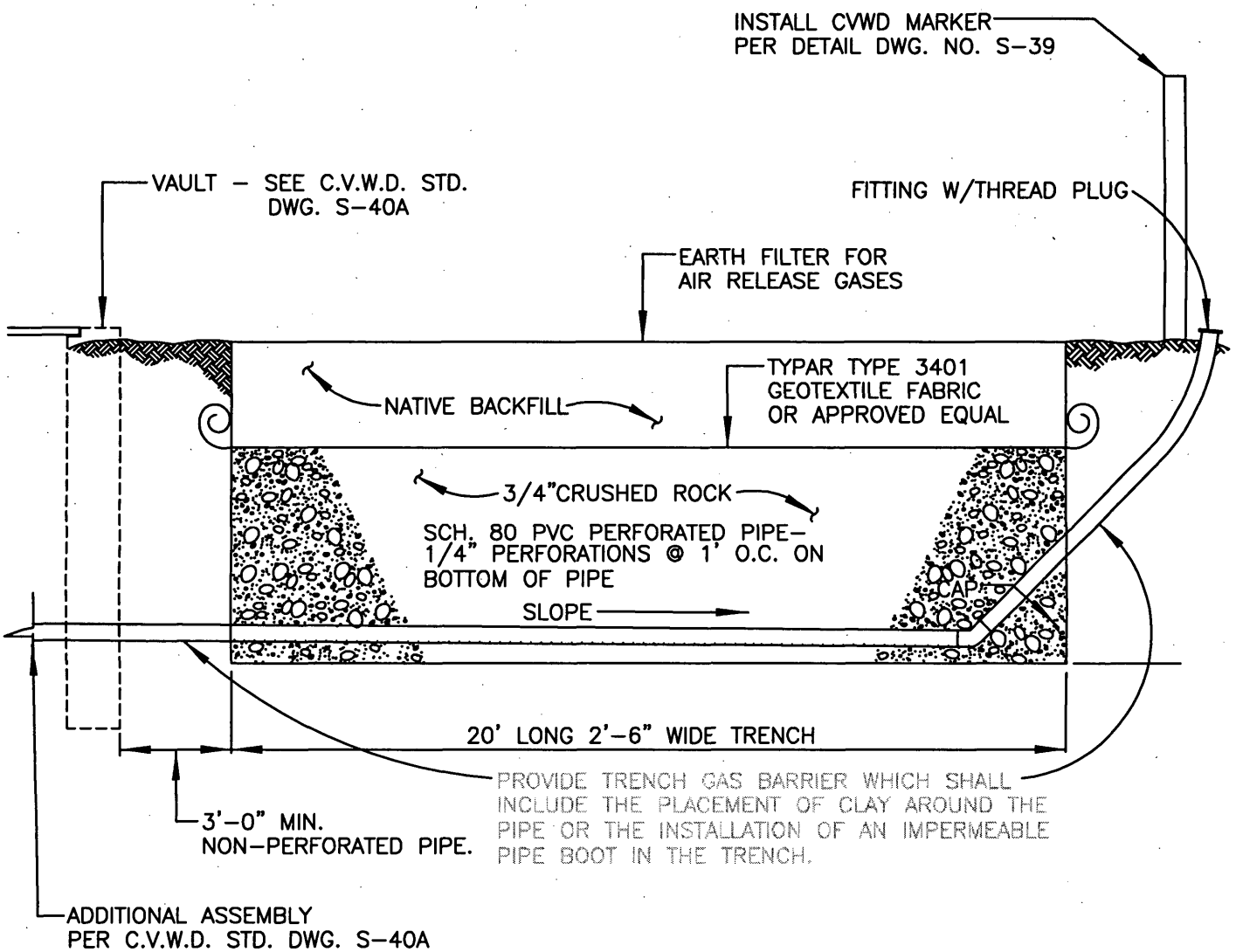

COACHELLA VALLEY WATER DISTRICT

DETAIL OF
AIR RELEASE AND
AIR VACUUM ASSEMBLY DISCHARGE

APPROVAL DATE: OCT 2005 | S-40B

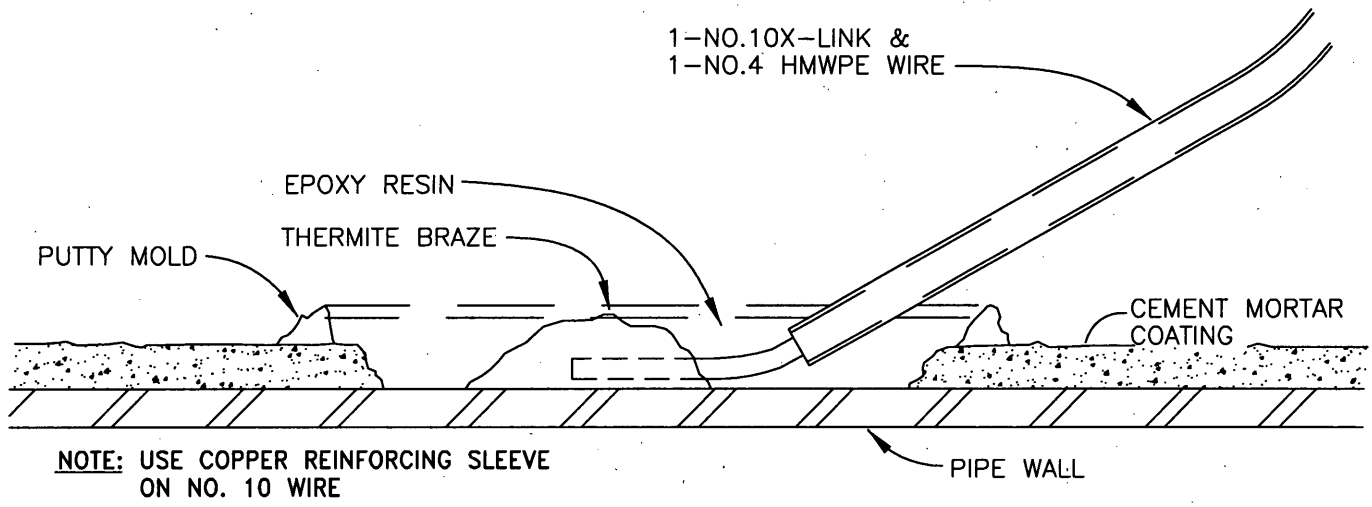

NOTE: USE COPPER REINFORCING SLEEVE ON NO. 10 WIRE

WIRE TO PIPE CONNECTION DETAIL

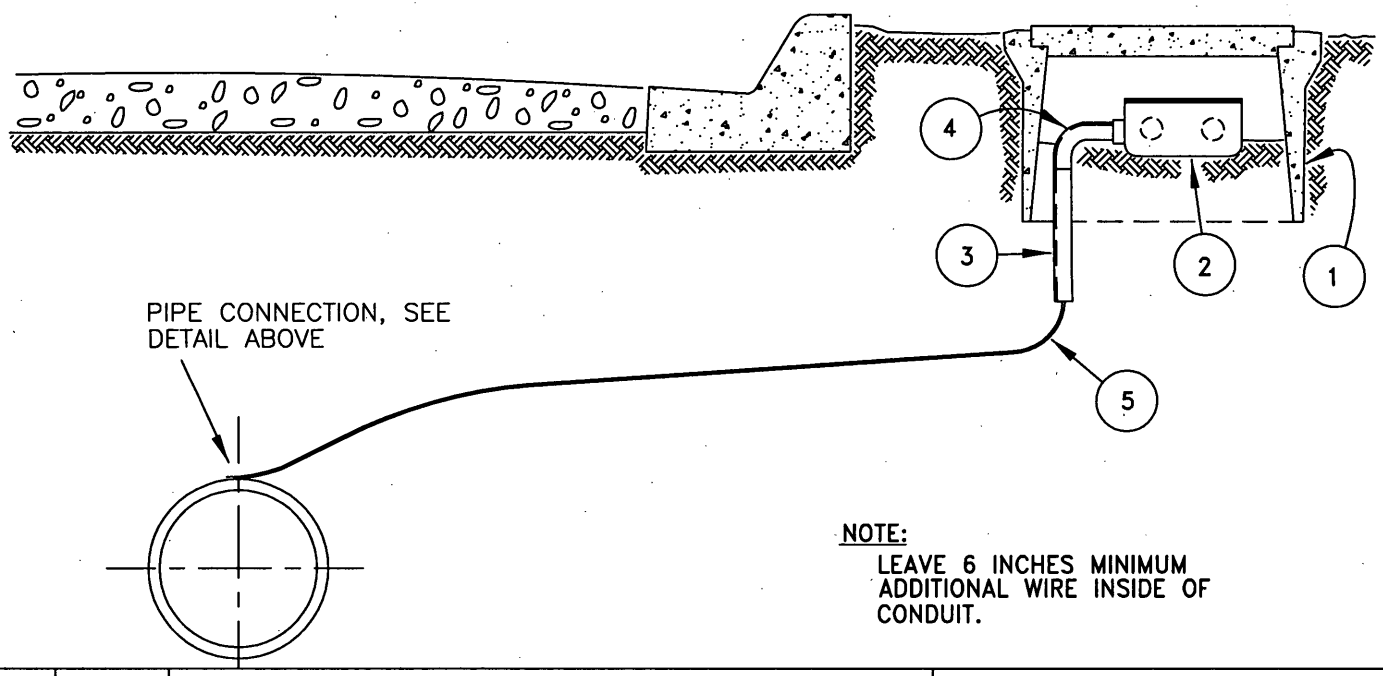

NOTE:
LEAVE 6 INCHES MINIMUM ADDITIONAL WIRE INSIDE OF CONDUIT.

ITEM NO.	NO. REQ.	SIZE AND DESCRIPTION	REMARKS
1	1	BROOKS NO. 33 METER BOX & LID	SEE DETAIL DWG. W-5/S-43
2	1	1" PVC CONDUIT W/ GASKETED COVER TYPE C	
3	18"	1" SCHEDULE 80 PVC CONDUIT	
4	1	1" SCHEDULE 80 LONG RADIUS 90° ELL	
5	1 ea	NO. 10 X-LINK & NO. 4 HMWPE WIRE	

COACHELLA VALLEY WATER DISTRICT

DETAIL OF CATHODIC PROTECTION TEST STATION-IMPROVED AREAS

APPROVAL DATE: OCT 2005 | W-36/S-41

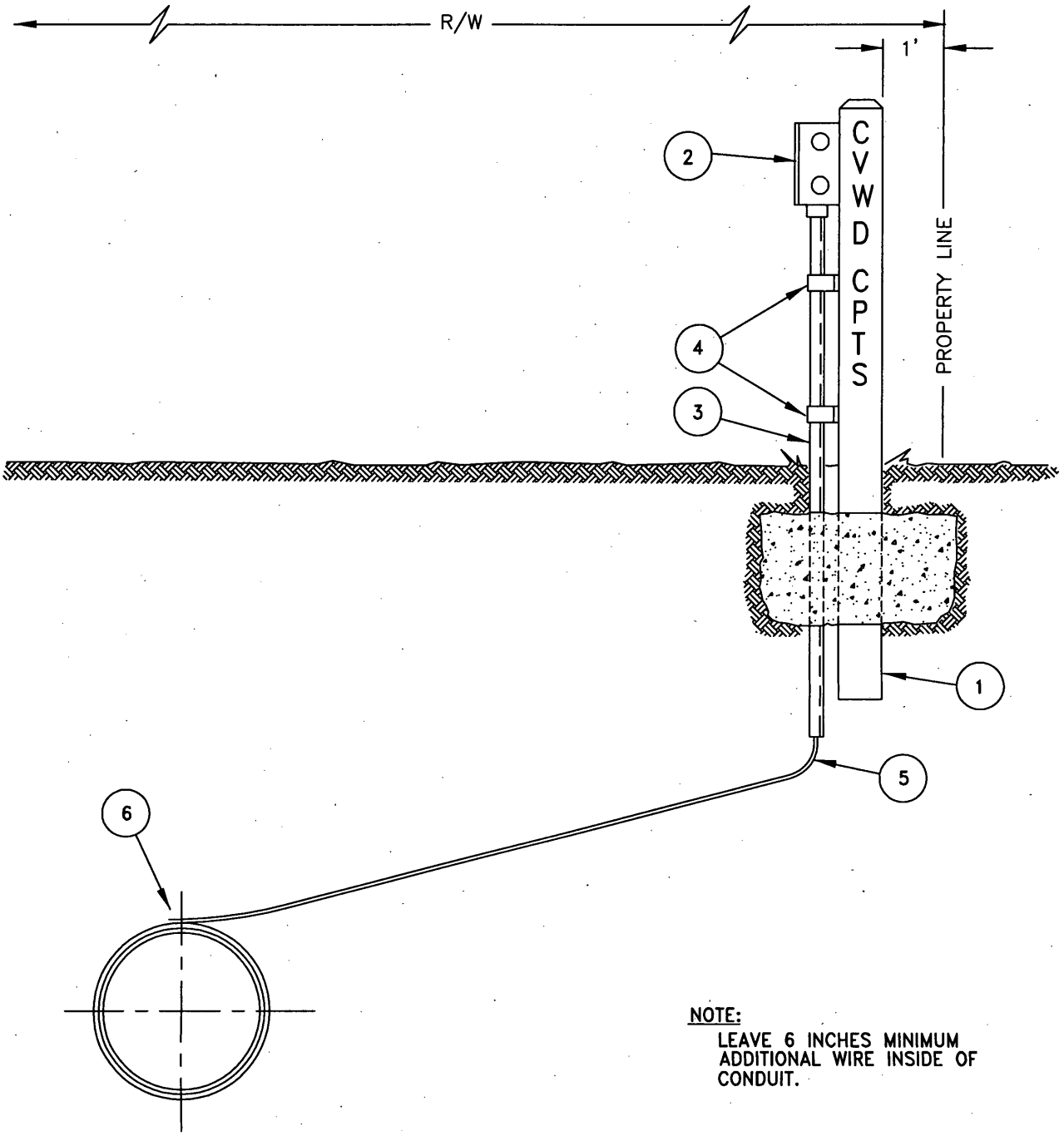

NOTE:
LEAVE 6 INCHES MINIMUM ADDITIONAL WIRE INSIDE OF CONDUIT.

ITEM NO.	NO. REQ.	SIZE AND DESCRIPTION	REMARKS
1	1	STANDARD MARKER	
2	1	1" PVC CONDUIT W/ GASKETED COVER TYPE C	
3	5'	1" SCH. 80 PVC CONDUIT	
4	2	2 HOLE CONDUIT STRAP W/ ALUMINUM NAILS	
5	1 ea	NO. 10 X-LINK & NO. 4 HMWPE WIRE	
6	1	WIRE TO PIPE CONNECTION	SEE DETAIL DWG. W-36/S-41

COACHELLA VALLEY WATER DISTRICT

DETAIL OF CATHODIC PROTECTION TEST STATION-UNIMPROVED AREAS

APPROVAL DATE: OCT 2005 | W-37/S-42

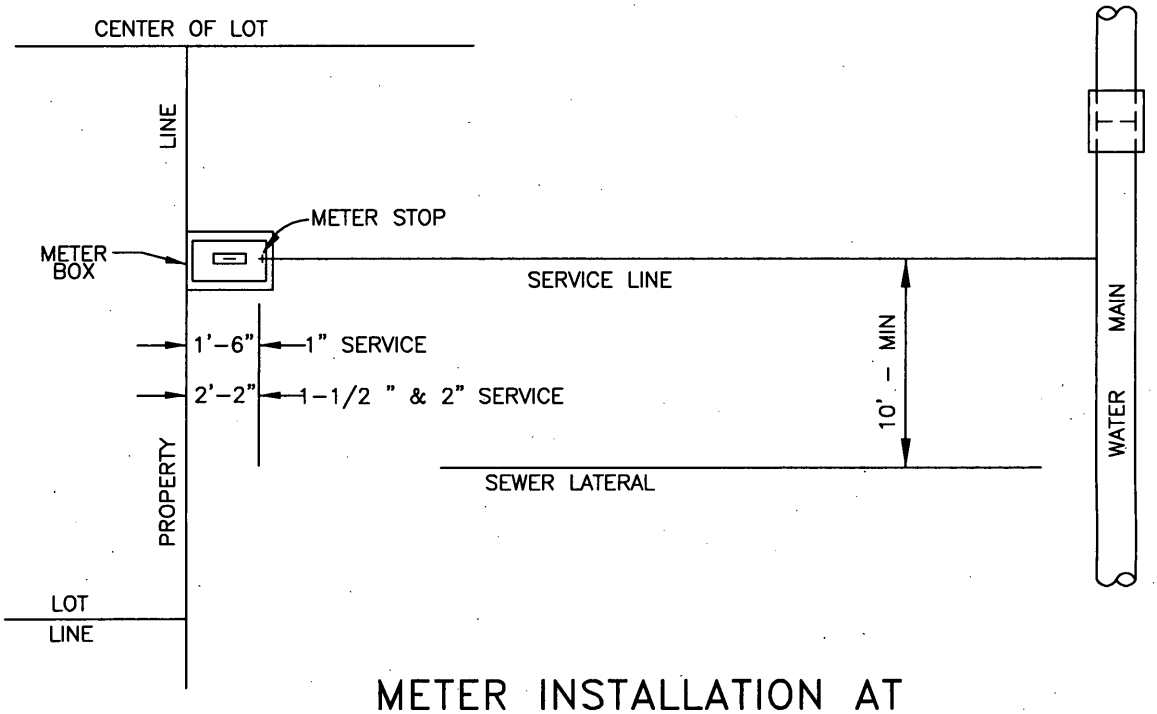

METER INSTALLATION AT PROPERTY LINE

NOTE: 1. IF SIDEWALK IS ADJACENT TO THE CURB THE METER BOX IS TO BE LOCATED OUTSIDE AND ADJACENT TO SIDEWALK.

2. FOR SERVICE INSTALLATION DETAILS, SEE DETAIL DRAWINGS W-7A, W-7B, W-8, W-9A, W-9B, W-11A, W-11B

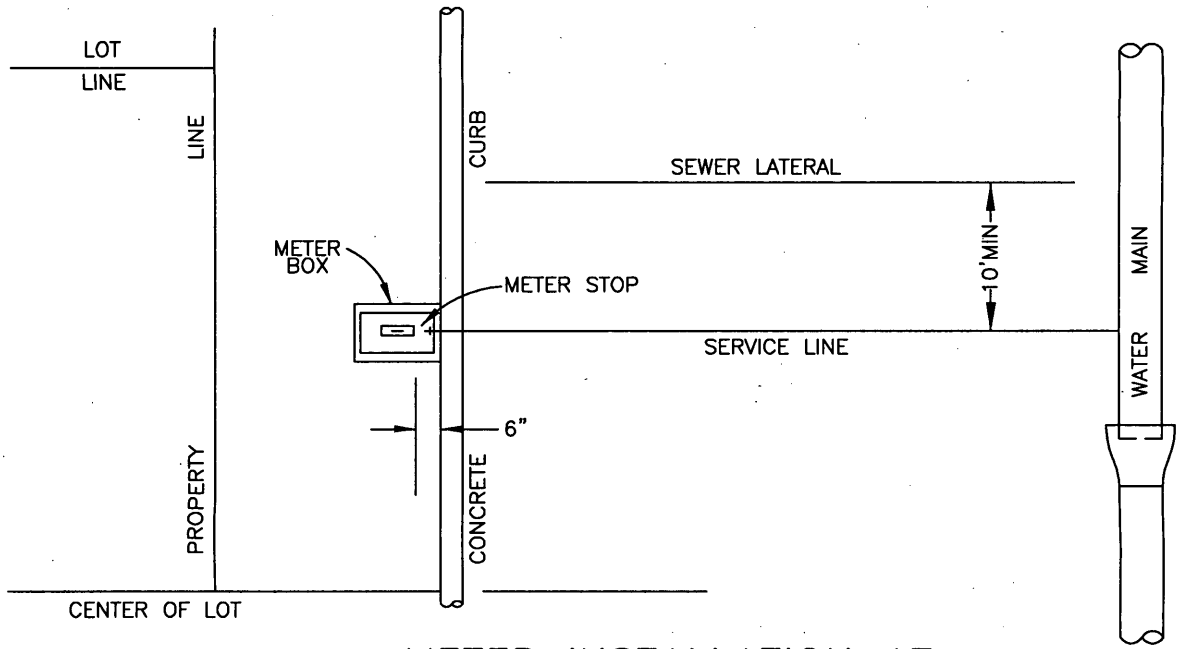

METER INSTALLATION AT CONCRETE CURB LINE

	COACHELLA VALLEY WATER DISTRICT
	GENERAL LOCATION OF SEWER LATERAL AND WATER METER / WATER SERVICE INSTALLATION
	APPROVAL DATE: OCT 2005 — W-5/S-43

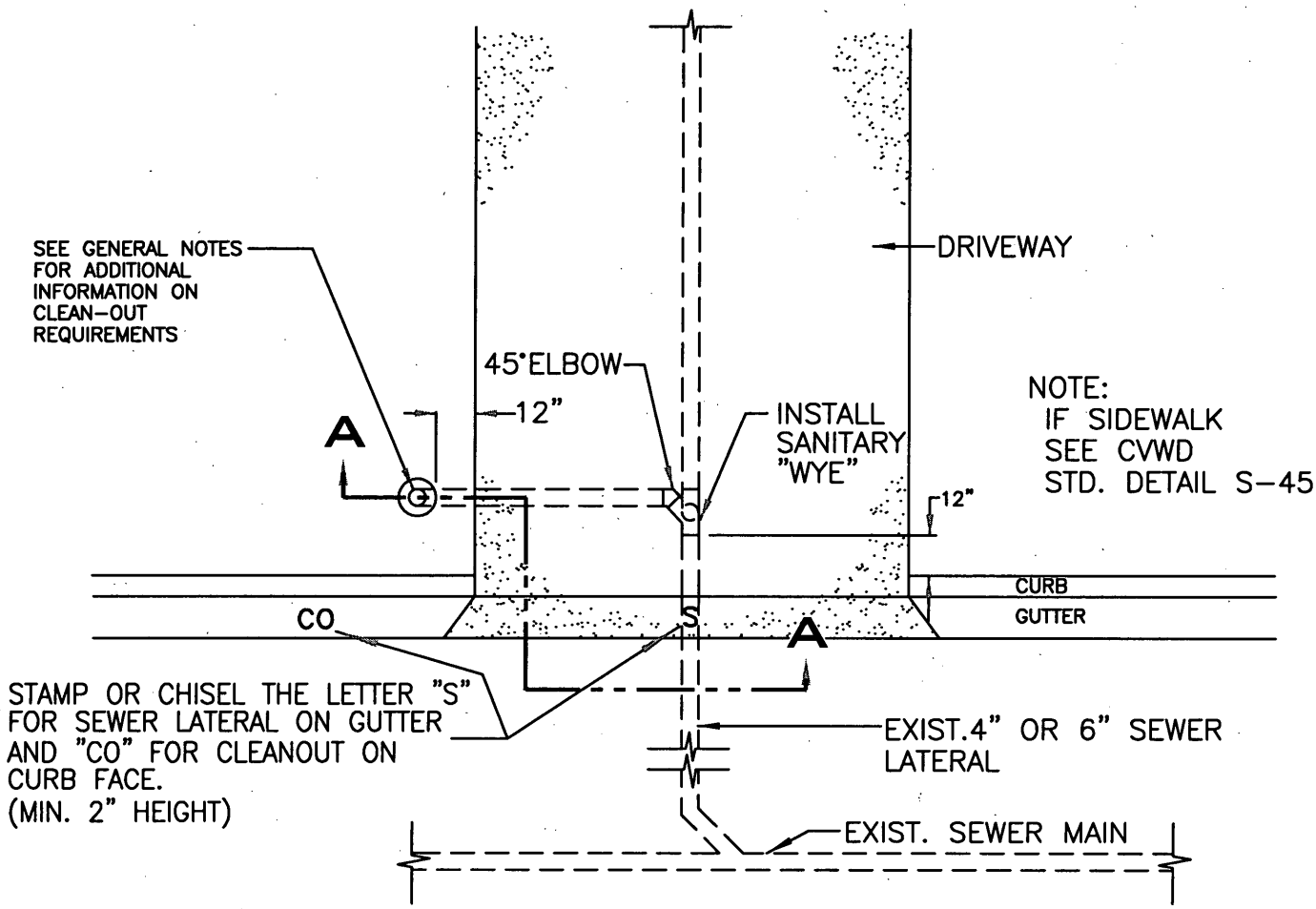

PLAN VIEW

N.T.S.

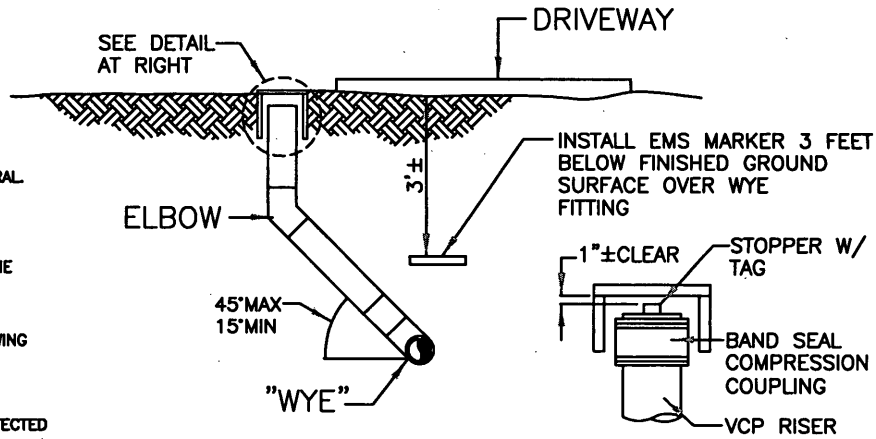

CROSS SECTION A-A

N.T.S

DETAIL

GENERAL NOTES

1. THE CLEAN-OUT SHALL BE THE SAME SIZE AS THE SEWER LATERAL.
2. THE WYE SHALL BE LOCATED 12 INCHES BEHIND THE CURB.
3. THE CLEAN-OUT SHALL BE CONSTRUCTED ON EITHER SIDE OF THE DRIVEWAY, APPROXIMATELY 12 INCHES BEHIND THE CURB.
4. THE CLEAN-OUT SHALL BE LOCATED ON EITHER SIDE OF THE DRIVEWAY AND SHALL BE CONTRUCTED AS SHOWN ON THIS DRAWING AND BE PROTECTED AS REQUIRED IN CASES A THRU B

CASES

A. CLEAN-OUTS LOCATED IN GREENBELT AREA SHALL BE PROTECTED BY A STANDARD CLEAN-OUT COVER AT GRADE.

B. CLEAN-OUTS LOCATED IN PLANTER AREAS SHALL BE RAISED 3-INCHES ABOVE THE SURROUNDING GRADE.

5. THE TOTAL HORIZONTAL AND VERTICAL CHANGES IN DIRECTION SHALL NOT EXCEED 120 DEGREES.

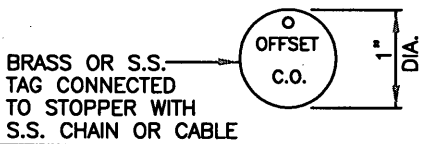

COACHELLA VALLEY WATER DISTRICT

STANDARD OFFSET CLEAN-OUT DETAIL FOR LATERAL UNDER DRIVEWAY WITH NO SIDEWALK

APPROVAL DATE: OCT 2005

S-44

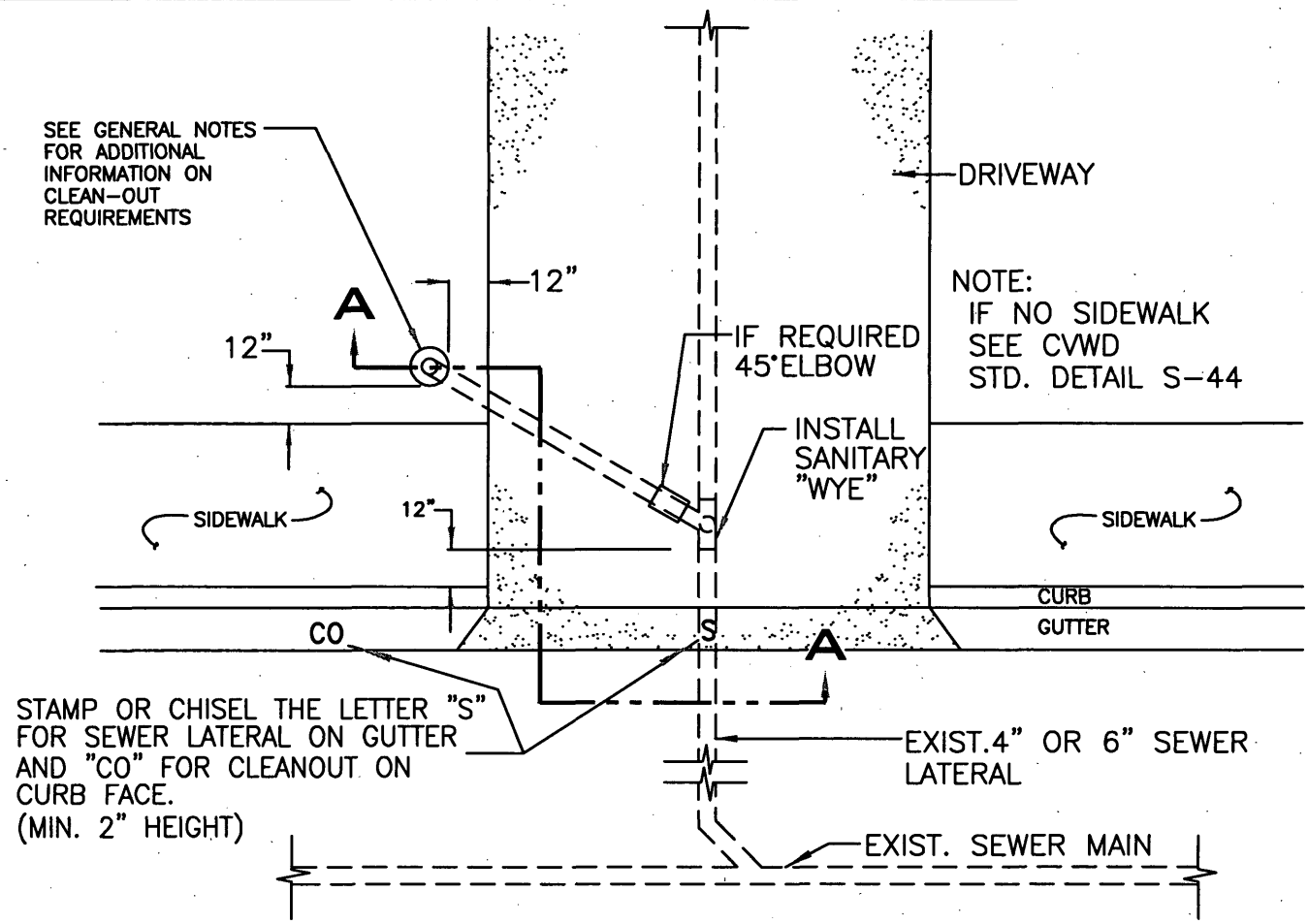

PLAN VIEW

N.T.S.

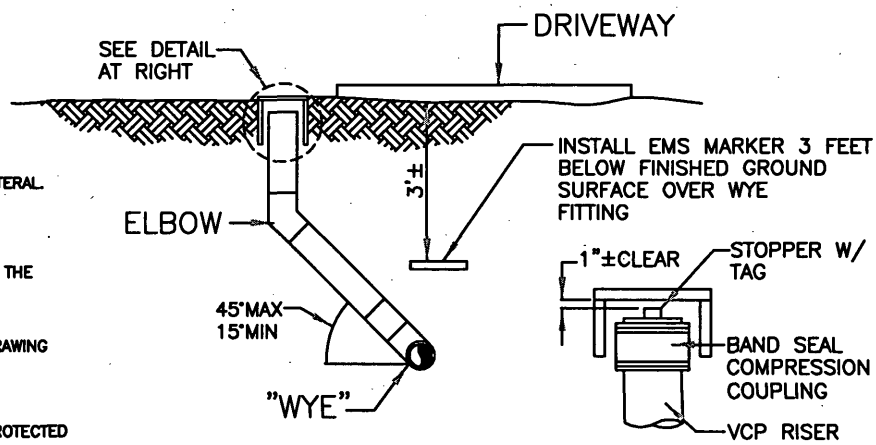

CROSS SECTION A-A DETAIL

N.T.S

GENERAL NOTES

1. THE CLEAN-OUT SHALL BE THE SAME SIZE AS THE SEWER LATERAL.
2. THE WYE SHALL BE LOCATED 12 INCHES BEHIND THE CURB.
3. THE CLEAN-OUT SHALL BE CONSTRUCTED ON EITHER SIDE OF THE DRIVEWAY, APPROXIMATELY 12 INCHES BEHIND THE SIDEWALK.
4. THE CLEAN-OUT SHALL BE LOCATED ON EITHER SIDE OF THE DRIVEWAY AND SHALL BE CONTRUCTED AS SHOWN ON THIS DRAWING AND BE PROTECTED AS REQUIRED IN CASES A THRU B

CASES

A. CLEAN-OUTS LOCATED IN GREENBELT AREA SHALL BE PROTECTED BY A STANDARD CLEAN-OUT COVER AT GRADE.

B. CLEAN-OUTS LOCATED IN PLANTER AREAS SHALL BE RAISED 3 INCHES ABOVE THE SURROUNDING GRADE.

5. THE TOTAL HORIZONTAL AND VERTICAL CHANGES IN DIRECTION SHALL NOT EXCEED 120 DEGREES

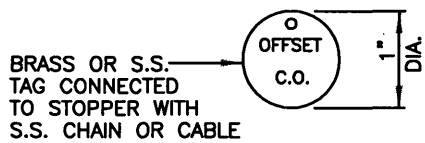

COACHELLA VALLEY WATER DISTRICT

STANDARD OFFSET CLEAN-OUT DETAIL FOR LATERAL UNDER DRIVEWAY WITH SIDEWALK

APPROVAL DATE: OCT 2005

S-45

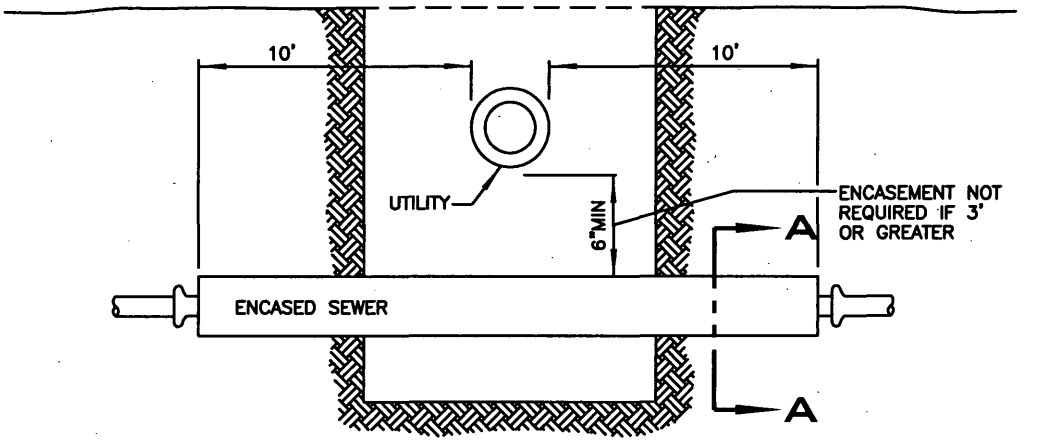

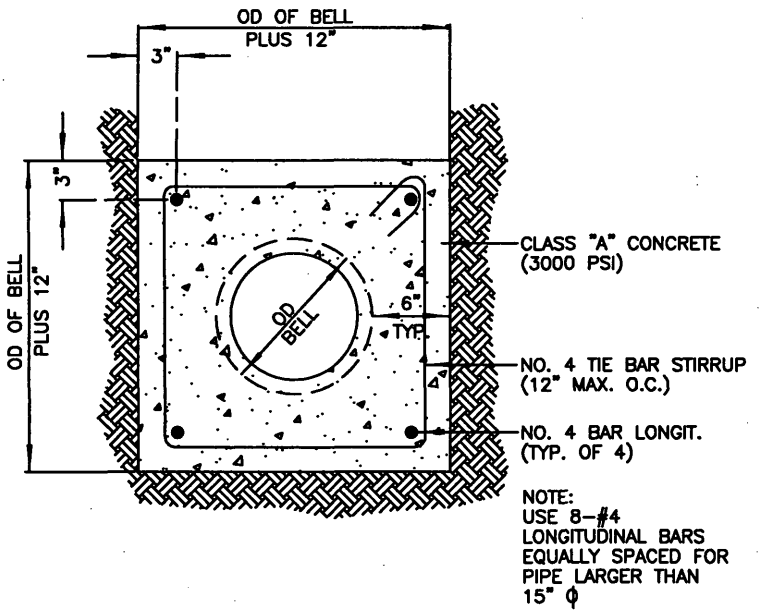

SECTION A-A

GENERAL NOTES:

1. EXTEND BOTH ENDS OF CRADLE OR ENCASEMENT TO A POINT ONE INCH SHORT OF FIRST PIPE JOINT BEYOND LOCATIONS SPECIFIED ON PLAN.

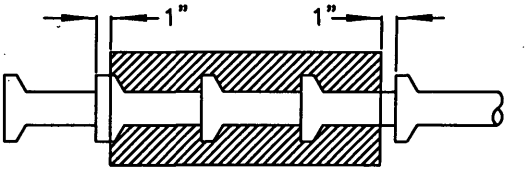

2. APPLY FORM OIL, THIN PLASTIC SHEET, OR OTHER ACCEPTABLE MATERIAL TO PIPE TO PREVENT BOND BETWEEN PIPE AND CONRETE.
3. USE CLASS A 3000 PSI CONCRETE
4. EXPANSION JOINTS MUST BE PLACED AT 20' INTERVALS, AT THE PIPE JOINT ON CONTINUOUS ENCASEMENT OR CRADLE.

COACHELLA VALLEY WATER DISTRICT	
CONSTRUCTION DETAIL FOR STRUCTURAL ENCASEMENT OF SEWER	
APPROVAL DATE: OCT 2005	S-46

PART 1 - GENERAL

1.1 SUMMARY OF THE WORK:

1.1.1 The Work under this Contract necessary for and incidental to the execution and completion of all Work indicated in the Contract Documents for construction of:

City of Rancho Mirage
Whitewater Park Expansion and Amphitheater Construction
71-560 San Jacinto Drive
Rancho Mirage, California 92270

1.1.2 Contract Documents prepared by:

For Landscape Portion:
Hermann Design Group
77-772 Flora Road, Suite A
Palm Desert, California 92211

For Architectural Portion:
McAuliffe & Company, Inc.
42-600 Caroline Court, Suite 102
Palm Desert, California 92211

For Civil Portion:
The Altum Group
73-710 Fred Waring Drive, Suite 219
Palm Desert, California 92260

1.2 GENERAL DESCRIPTION OF WORK:

1.2.1 Expansion of the existing Whitewater Park on approximately 3 acres adjacent to the present park. Existing recreational facilities will remain substantially in place. The expansion plans include a new amphitheater and pedestrian promenade, a new grand arrival, new and relocated play equipment in a new children's play area, a new grand arrival with drop-off and vehicular turn-around, exercise stations, Pickle Ball Courts, Irrigation and Landscaping, Lighting, and expanded parking facilities.

1.2.2 The amphitheater includes terrace seating areas, a covered performance platform, public restrooms, storage, and back-of-house facilities.

1.2.3 Landscape improvements include new trees lining pedestrian promenade, and framing the grand arrival, extensive new plant materials, lawn, irrigation improvements, and park monument signage at the new grand arrival.

1.2.4 The Work of this Section includes the furnishing of all labor, materials, services and transportation, except as specifically excluded, which is required for the completion of the Project in accordance with the requirements of the Contract Documents.

1.3 REQUIREMENTS OF REGULATORY AGENCIES:

1.3.1 Construction shall be in conformance with the California Code of Regulations (CCR), as follows:

.1 2010 California Building Standards Administrative Code, Part 1, Title 24 C.C.R.

.2 2010 California Building Code (CBC), Part 2, Title 24 C.C.R.
(2009 International Building Code (IBC).

.3 2010 California Electrical Code (CEC), Part 3, Title 24 C.C.R.
(2008 National Electrical Code).

.4 2010 California Mechanical Code (CMC), Part 4, Title 24 C.C.R.
(2009 Uniform Mechanical Code).

.5 2010 California Plumbing Code (CPC), Part 5, Title 24 C.C.R.
(2009 Uniform Plumbing Code).

.6 2010 California Fire Code (CFC), Part 9, Title 24 C.C.R.
(2009 International Fire Code).

.7 2010 California Energy Code.

.8 2010 NFPA Standards – as adopted by Title 24.

.9 City of Rancho Mirage Municipal Code – Current Edition

1.3.2 A copy of CCR Title 24 Parts 1 and 2 shall be kept at the Project site during construction.

1.3.3 Accessibility Requirements: Comply with 2010 California Building Code (CBC). Construction shall be in conformance with the ADA Accessibility Guidelines for Buildings and Facilities, dated June 26, 1991 as amended April 5, 1993 and January 18, 1994, and July 2004.

1.4 OCCUPATIONAL SAFETY AND HEALTH ACT REQUIREMENTS:

1.5.1 During the entire construction period, it shall be the responsibility of the Contractor to maintain conditions at the Project site so as to meet in all respects the requirements of the California Code of Regulations, Title 8, Industrial Relations, Chapter 4, Div. of Industrial Safety.

1.5.2 Asbestos Free Materials: Materials containing asbestos will not be permitted to be used. Comply with requirements of the Environmental Protection Agency (EPA), 16 CFR 1305 dated 1978, and other governmental agencies having jurisdiction.

1.5.3 Owner's "Construction Guide" must be followed.

1.6 CONFLICTS:

If a conflict exists between referenced regulatory requirements or between referenced regulatory requirements and the Contract Documents, the Contractor shall notify the Owner/Owner's Representative and request that the conflict be resolved. The fact that the Contract Documents may establish higher or more costly requirements than the minimum Code or other regulatory requirements referenced above shall not constitute a "conflict".

1.7 COORDINATION OF PHYSICAL SPACE:

1.7.1 Coordinate use of physical space and sequence of installation of mechanical work, specifically ductwork, electrical work, and plumbing which is indicated diagrammatically on the Drawings. Follow routing indicated as closely as practicable, with due allowance for available physical space; make runs parallel with lines of building. Coordinate work of the various trades to assure efficient and orderly utilization of space available.

1.7.2 The Contractor's attention is directed to the need of special coordination and efficient use of the available physical space between the top of ceiling framing and bottom of the roof framing on all buildings.

1.7.3 In finished areas, except as indicated otherwise, conceal pipes, ducts, and conduits in the construction. Coordinate location of fixtures and outlets with finish elements.

1.8 COORDINATION WITH STRUCTURAL REQUIREMENTS:

1.8.1 The placement of pipes, conduits, other materials, and the location, size and reinforcement of holes in the building structure shall conform to the structural Drawings and Specifications. When the requirements of the Mechanical, Electrical or other sections of the Specifications or Drawings are in conflict with the structural requirements, the structural requirements shall take precedence. Where the safety of the building structure is threatened, due to mechanical, electrical or other work or holes required for such work, modifications shall be made as directed by the Owner/Owner's Representative.

1.8.2 It is the Contractor's responsibility to coordinate the Work so as to minimize conflicts and optimize efficiency.

1.9 COORDINATION OF SITE UTILITIES AND FACILITIES

1.9.1 Civil Engineering Work, including survey for utility lines and drainage in the Scope of Work area will be included in Contractor's Bid.

1.9.2 Coordinate the work and sequence of installation of the various utilities and facilities. Coordinate connection of utility systems with public agencies and other trades. Comply with requirements of governing agencies and regulations. Notify Owner/Owner's Representative of any conflict and make modifications as directed by Owner/Owner's Representative.

1.10 WORK INDICATED AS NIC:

1.10.1 The term "NIC" shall be construed to mean that construction work not to be furnished, installed or performed by the Contractor. The term shall mean "Not in this Contract" or "Not a Part of the Work to be performed by the Contractor" except that coordination and installation of certain NIC items specified shall be the Contractor's responsibility.

1.10.2 "NIC" work is indicated on the Drawings and specified herein as an aid to the Contractor in scheduling the amount of time and materials necessary for the completion of the Contract.

1.11 OWNER-FURNISHED CONTRACTOR-INSTALLED PRODUCTS:

1.11.1 Owner's Responsibilities: The Owner will arrange and pay for product delivery to the site in accordance with the construction schedule. The Owner and the Contractor shall jointly inspect the deliveries for shortages and damaged or defective items. The Owner will arrange for replacement of damaged, defective or missing items.

1.11.2 Contractor's Responsibilities: The Contractor shall unload, uncrate, and store the products at the site and shall protect them from exposure to the elements and other damage. Items damaged after acceptance by the Contractor shall be replaced at the Contractor's expense. The products shall be installed, connected, adjusted and finished in accordance with the applicable section of these Specifications.

1.12 CONTRACTOR'S USE OF THE PREMISES:

1.12.1 The Contractor shall limit his use of the premises for construction activities and for storage, to allow for Owner occupancy or for construction activities by other contractors.

1.12.2 The Contractor shall be responsible for the following:

.1 Coordinate the use of the premises under the direction of the Owner.

.2 Assume full responsibility for the protection and safekeeping of products under this Contract which are stored at the site.

.3 Move stored products that are under the Contractor's control, which interfere with operations of the Owner or the other contractors.

.4 Obtain and pay for the use of additional storage or construction areas needed for operations.

.5 The Contractor shall make provisions to insure the security of the building.

1.13 OWNER OCCUPANCY:

1.13.1 The Owner will occupy the premises during the entire period of construction for the conduct of his normal operations. Cooperate with the Owner in all construction operations including the following to minimize conflict and to facilitate Owner usage.

1.13.2 If and when it should be necessary for the Contractor to impact the day-to-day operations of Owner's functions in order to pursue the Work, the Contractor shall furnish adequate (at least two (2) weeks and depending on the impact more time may be needed) notice to the Owner and coordinate the means and timing to avoid, minimize, or circumvent such impacts. The Owner reserves the right to assess and anticipate such impacts and the right to stop or postpone the Work until a mutually satisfactory time and means can be agreed upon. Costs incurred due to delays caused by such impacts on Owner's functions will be negotiated at the time of the occurrence of such delay. Typical impacts shall include, but not be limited to, the following:

.1 Interruption of utility service serving the existing buildings, areas, or functions.

.2 Blockage of or inhibiting access to existing entry, exit, dock, delivery or pickup point, driveway, fire hydrant. Particular care shall be taken to maintain access for delivery of supplies, entry and egress of visitors and employees.

.3 Noise, dust, dirt, water, fumes or other objectionable, hazardous, or disruptive conditions.

.4 Interruption of heating, air conditioning, and ventilating systems.

.5 Interruption of internal systems such as gas supplies, communications, fire sprinklers, fire alarms, internal deliveries, elevators, other systems.

1.14 DIVISION AND IDENTIFICATION OF DRAWINGS AND SPECIFICATIONS:

The drawings and specifications are divided in sections and titled, as set forth in the drawing sheet index and the specification table of contents, for convenience of ready reference only, and the Contractor shall not construe such as establishing the scope of work of the various trades. The Contractor shall be responsible for dividing the work among his various subcontractors. The Architect assumes no responsibility to act as arbiter to establish subcontract limits of work. The Contractor shall be responsible for providing items, devices or parts of work regardless of where they are indicated in the drawings or specifications.

END OF SECTION

34-003 – 03/04/2014

SECTION 01115

REQUESTS FOR INFORMATION

PART 1 - GENERAL

1.1 SUMMARY:

1.1.1 Section Includes: Procedures for requesting information other than that shown in the Contract Documents, and discusses conditions under which such requests will be considered.

1.2 RELATED WORK:

1.2.1 Related Work Specified Elsewhere:

.1 Documents affecting work of this Section include, but are not necessarily limited to, General Conditions, Supplementary Conditions, and other Sections in Division 1 of these Specifications.

1.3 REQUESTS FOR INFORMATION:

1.3.1 Assumption of Prior Knowledge:

.1 Instructions to Bidders for this Work state requirements that, prior to submitting a bid, bidders become thoroughly familiar with the proposed Contract Documents, and that they request and secure clarification of all matters on which there may be any question as to design intent.

.2 Reasons for these requirements include the Owner's wish:

a. That bidders have complete and adequate knowledge of the proposed Work in order to propose a fair and proper bid price;

b. To avoid unnecessary time-consuming and effort-consuming requests for information during progress of the work; and

c. To discourage frivolous requests for information while encouraging acquisition of complete familiarity with the Drawings, Specifications, and other Documents of the Contract.

1.3.2 However, the Owner and the Architect recognize that data may inadvertently have been omitted from the Contract Documents or require clarification of alleged conflict of data, and the following procedures are established for requesting such data.

1.3.3 Procedures:

.1 Prior to requesting information, conduct a thorough search of the Contract Documents and determine that the information is apparently missing from the Contract Documents or requires clarification of an alleged conflict of data.

.2 Fill out a photocopy of the “Request for Information” form which follows this Section, and deliver it to the Owner/Owner’s Representative.

.3 The Owner/Owner’s Representative will conduct the necessary search.

.4 Within 14 calendar days, the Owner/Owner’s Representative will respond to the Request for Information.

a. Should the information be missing, or require clarification, the Owner/Owner’s Representative will respond by giving the proper information to the Contractor.

b. Should the information already be clearly shown in the Contract Documents, the Owner/Owner’s Representative will so advise the Contractor by stating the location of the requested information and the Owner may deduct the sum of Two Hundred Fifty Dollars ($250.00) from the Contract Sum, not as a penalty but as reimbursement for the Owner/Owner’s Representative’s time and effort devoted to research and handling.

PART 2 - PRODUCTS (Not Applicable)

PART 3 - EXECUTION (Not Applicable)

END OF SECTION

34-003 – 03/04/2014

SECTION 01230

ALTERNATES

PART 1 - GENERAL

1.1 SUMMARY:

1.1.1 Alternates are defined as alternate products, materials, equipment, systems, methods, or major elements of the construction, which may, at the Owner's option and under terms established in the Agreement, be selected for the Work instead of the corresponding requirements of the Contract Documents.

1.1.2 Related Documents: The Conditions of the Contract and other sections of Division 1 apply to this section as fully as if repeated herein.

1.2 GENERAL REQUIREMENTS:

1.2.1 Refer to the Agreement for determination of which of the scheduled alternates have been accepted, and therefore are in full force and effect as though included originally in the contract documents.

1.2.2 The description herein for alternates is incomplete and abbreviated, but implies that each change shall be complete for the scope of construction activities affected. Coordinate related construction activities and modify surround construction as required to properly integrate with each alternate. Descriptions of alternates are primarily scope definitions and do not necessarily detail the full range of materials and processes needed to complete the construction.

1.3 SCHEDULE OF ALTERNATES:

1.3.1 Precast Concrete Specialties: Section 03480.

1.3.2 Misting Fog System: Section 13010.

PART 2 - PRODUCTS (Not Applicable)

PART 3 - EXECUTION (Not Applicable)

END OF SECTION

SECTION 01290

APPLICATIONS FOR PAYMENT

PART 1 - GENERAL

1.1 SCHEDULE OF VALUES:

1.1.1 Coordinate preparation of the Schedule of Values with the Contractor's Construction Schedule.

1.1.2 Correlate line items in the Schedule of Values with other schedules and forms, including:

.1 Contractor's Construction Schedule

.2 Application for Payment Form

.3 List of Subcontractors

.4 List of Products

.5 Schedule of Submittals

1.1.3 Submit the Schedule of Values to the Owner/Owner's Representative at the earliest date, but no later than 7 days before the date scheduled for submittal of the initial Application for Payment.

1.1.4 Format and Content: Use the Project Manual Table of Contents as a guide to establish the format.

.1 Identification: Include the following identification:

a. Project name and location
b. Name of the Owner
c. Project number
d. Contractor's name and address
e. Date of submittal

.2 Arrange the Schedule in tabular form with columns to indicate the following for each item:

a. Generic name
b. Related Specification Section
c. Change Orders (numbers) that have affected value
d. Dollar value
e. Percentage of Contract Sum to the nearest one-hundredth percent, adjusted to total 100 percent.

.3 Break Contract Sum down in enough detail to facilitate evaluation of Applications for Payment. Break subcontract amounts down into several line items. Round amounts off to the nearest dollar; the total shall equal the Contract Sum.

.4 Show line items for indirect costs, and margins on costs, to extent that such items will be listed individually in Application for Payment. Each item in the Schedule of Values and Applications for Payment shall be complete including total cost and share of overhead and profit.

a. Temporary facilities and items that are not direct cost of Work-in-Place may be shown as separate line items or distributed as general overhead expense.

b. Update and resubmit the schedule when Change Orders or Construction Change Directives change the Contract Sum.

1.2 APPLICATIONS FOR PAYMENT:

1.2.1 Each Application for Payment shall be consistent with previous applications and payments as certified by the Owner/Owner's Representative and paid for by the Owner.

1.2.2 Payment Application Times: Payment dates are indicated in the Agreement. The period covered by each application is the period indicated.

1.2.3 Payment Application Forms: Use the form provide by the Owner/Owner's Representative.

1.2.4 Application Preparation: Complete every entry, including notarization and execution by person authorized to sign on behalf of the Owner. Incomplete applications will be returned without action.

.1 Entries shall match data on the Schedule of Values and Contractor's Construction Schedule. Use updated schedules if revision have been made.

.2 Include amount of Change Orders and Construction Change Directives issued prior to the last day of the period covered by the application.

1.2.5 Transmittal: Submit 6 executed copies of each application to the Owner/Owner's Representative within 24 hours.

.1 Transmit each copy with a transmittal listing attachments, and recording information related to the application.

1.3 INITIAL APPLICATION FOR PAYMENT:

Administrative actions and submittals that must precede or coincide with submittal of the first Application for Payment include:

.1 List of subcontractors
.2 Schedule of Values
.3 Contractor's Construction Schedule (preliminary if not final).
.4 Submittal Schedule (preliminary if not final).
.5 List of Contractor's staff assignments.

1.4 APPLICATION FOR PAYMENT AT SUBSTANTIAL COMPLETION:

Following issuance of the Certificate of Substantial Completion, submit an Application for Payment; reflect Certificates of Partial Substantial Completion issued previously for Owner occupancy of designated portions. Administrative actions and submittals that precede or coincide with this application include:

.1 Warranties and maintenance agreements
.2 Test/adjust/balance records
.3 Maintenance instructions
.4 Meter readings
.5 Change-over information related to Owner's occupancy
.6 Final cleaning

1.5 FINAL PAYMENT APPLICATION:

Administrative actions and submittals which must precede or coincide with submittal of the final payment application include:

.1 Completion of project closeout requirements.
.2 Completion of items specified for completion after Substantial Completion.
.3 Transmittal of required project construction records to Owner/Owner's Representative.

PART 2 - PRODUCTS (Not Applicable)

PART 3 - EXECUTION (Not Applicable)

END OF SECTION

34-003 – 03/04/2014

SECTION 01312

PROJECT MEETINGS

PART 1 - GENERAL

1.1 SUMMARY:

1.1.1 Section Includes: Requirements for preconstruction meeting, progress meetings, specially called meetings, and post-construction meeting.

1.1.2 Related Documents: The Conditions of the Contract and other sections of Division 1 apply to this section as fully as if repeated herein.

1.2 CONTRACTOR'S RESPONSIBILITIES:

1.2.1 Contractor or Contractor’s Representative and Job Superintendent must attend all site meetings. Architect/Designer to determine time and location, prepare agenda, notify participants, and make physical arrangements for all site meetings. The agenda will follow format specified in paragraph 1.4.3.

1.2.2 Contractor will record meeting minutes, to include significant proceedings and decisions. Contractor will reproduce and distribute copies of minutes to all attendees within 5 days after each meeting. In addition, Contractor will communicate with all parties affected by the decisions made during these meetings. Contractor is responsible for ensuring that all directives regarding work to be accomplished, deadlines, delivery of materials, workmanship, etc. are communicated to the appropriate persons.

1.3 PRE-CONSTRUCTION MEETING:

1.3.1 Before issuance of notice to proceed, a pre-construction meeting will be held at a time and location designated by the Architect/Designer.

1.3.2 Attendance: The meeting shall be attended by the Owner's representative, the Architect/Designer and his professional consultants, the Contractor and his superintendent, all major subcontractors and other persons designated by the Owner.

1.3.3 Agenda: The agenda for the meeting shall include the following items as a minimum.

.1 Distribution and discussion of the construction schedule including critical construction sequencing.

.2 Designation of persons authorized to represent and sign documents for the Owner, Architect/Designer and Contractor, with examples of official signature of each.

.3 Procedures and forms for processing submittals, field decisions, proposal requests, change orders, applications for payment, and revised construction schedules.

.4 Procedures for maintaining record documents.

.5 Contractor's use of premises including location of office, construction and storage areas.

.6 Temporary barricades, utilities, sanitary facilities, signs and other temporary facilities required.

.7 Safety and first aid procedures including designation of Contractors safety officer.

.8 Security procedures.

.9 Housekeeping procedures.

.10 Communication procedures between parties.

.11 List names, addresses and telephone numbers of those persons authorized to act for the Contractor in emergencies.

.12 Construction permit requirements, procedures and posting.

.13 Testing laboratory or agency and testing procedures.

.14 Establish schedule for progress meetings.

.15 Other administrative items as appropriate.

1.4 PROGRESS MEETINGS:

1.4.1 Progress meetings shall be held at the dates and times scheduled at the preconstruction meeting unless changes are agreed to by all parties and appropriate notification of such changes has been given.

1.4.2 Attendance: The meeting shall be attended by the Architect/Designer, the Contractor's superintendent and the Owner's representative. When requested by the Owner, the Architect/Designer or the Contractor; subcontractors, and the Architect/Designer's consultants shall also attend.

1.4.3 Agenda: The agenda for these meetings shall include the following items.

.1 Review progress of construction since the previous meeting.

.2 Discuss field observations, problems and conflicts.

.3 Identify problems which impede planned progress and develop corrective measures as required to regain the projected schedule. Revise the construction schedule if necessary.

.4 Plan progress during the next construction period.

.5 Coordinate the progress of subcontractors.

.6 Review changes proposed by the Owner for their effect on the construction schedule and completion time.

1.5 SPECIAL MEETINGS:

Upon appropriate notice to other parties, special meetings may be called by the Owner, Architect/Designer or Contractor, at times agreed to by all parties involved.

1.6 POST-CONSTRUCTION CONFERENCE:

A post-construction conference shall be held before final inspection of the Work to discuss and resolve all unsettled matters. Bonds and insurance to remain in force, and the other documents required to be submitted by the Contractor will be reviewed and all deficiencies determined. Schedules and procedures for the final inspection process and for the correction of defects and deficiencies shall be discussed and agreed.

PART 2 - PRODUCTS (Not Applicable)

PART 3 - EXECUTION (Not Applicable)

END OF SECTION

34-003 – 01/29/2014

SECTION 01325

PROGRESS SCHEDULES AND REPORTS

PART 1 - GENERAL

1.1 SUMMARY:

1.1.1 Section Includes: Preparation and submission of progress schedule, submittal schedule, and schedule of values, including the up-to-date maintenance of these schedules as required.

1.1.2 Related Documents:

.1 Time of completion: The Agreement.

.2 Construction phasing requirements: Section 01110.

.3 Submittal procedures for requests for payment: Section 01110.

.4 Submittal procedures for shop drawings, product data and samples: Section 01334.

1.2 CONSTRUCTION SCHEDULE:

1.2.1 Immediately upon being awarded the Contract and before request for first partial payment, the Contractor shall prepare and submit to the Owner/Owner's Representative a construction progress schedule.

.1 The schedule shall be prepared in fully developed, horizontal bar chart form with continuous vertical lines to identify the first working day of each week. Provide a separate time bar for each significant construction activity. Use the same breakdown of construction activities as used in preparing the Schedule of Values. Within each time bar, show estimated dates for beginning and completion and percent of completion in 10 percent increments. As Work progresses, place a contrasting mark in each bar to show actual completion.

.2 As an option to the bar chart form, the Contractor may prepare and submit the progress schedule using the critical path method (CPM), or other computer assisted method affording similar and equivalent information and control.

.3 The schedule shall conform to the working time and time of completion established under the terms of the Contract and shall be subject to modification by and approval of the Owner.

1.2.2 When, in the Owner/Owner Representative's opinion, it becomes necessary to accelerate the Work, modify the schedule to show the effects of the acceleration.

1.2.3 Continuously update and, if necessary, redraw the Construction Schedule and submit it simultaneously with the application for progress payments. Each revised schedule shall show the Work actually accomplished during the previous period and the schedule for completion of the remaining Work.

1.2.4 Post a copy of the current Construction Schedule in the Contractor's job office. Keep copies of out-of-date schedules at the job office for perusal by the Owner/Owner's Representative.

1.3 SUBMITTAL SCHEDULE:

1.3.1 Furnish a separate schedule along with the Construction Schedule specified herein, showing the proposed dates for submittal of shop drawings, product data, and samples.

1.3.2 When using CPM method to develop the progress schedule, the submittal schedule may be integrated into the progress schedule.

1.3.3 Submit two copies of the submittal schedule to the Owner/Owner’s Representative.

1.4 SCHEDULE OF VALUES:

1.4.1 Immediately upon being awarded the Contract, and before first request for partial payment, prepare and submit to the Owner/Owner’s Representative, a Schedule of Values allocated to the various portions of the Work. Use this Schedule of Values, unless challenged by the Owner/Owner’s Representative, as the basis for the Contractor's Applications for Payment.

1.4.2 The schedule shall list the installed value of the component parts of the Work in sufficient detail to serve as a basis for computing values for progress payments during construction. Follow the table of contents of this Project Manual as the format for listing component items. For each major line item, list sub-values of major products or operations under the item, where applicable.

1.4.3 Each item shall include a directly proportional amount of the Contractors overhead and profit.

1.4.4 For items on which progress payments for stored materials will be requested, break down the value into (1) the cost of the materials, delivered and unloaded, with taxes paid, and (2) the total installed value.

1.4.5 The sum of all values listed in the schedule shall equal the total Contract sum.

1.4.6 When using CPM method to develop the progress schedule, the schedule of values may be included in the progress schedule.

PART 2 - PRODUCTS (Not Applicable)

PART 3 - EXECUTION (Not Applicable)

END OF SECTION

34-003 – 03/04/2014

SECTION 01334

SHOP DRAWINGS, PRODUCT DATA, AND SAMPLES

PART 1 - GENERAL

1.1 SUMMARY:

1.1.1 Section Includes: Preparation and submission of shop drawings, product data, and samples as specified herein and in the various sections of these specifications. The requirements specified herein are in addition to requirements for shop drawings, product data, samples, materials lists, or other submittals specified elsewhere in these specifications.

1.1.2 Related Documents:

.1 Submittal of construction schedule, submittal schedule, and schedule of values are specified in Section 01325.

.2 Submittal of requests for substitution are specified in Section 01630.

.3 Submittal of operation and maintenance data and warranties are specified in Section 01770.

.4 The Conditions of the Contract and other sections of Division 1 apply to this section as fully as if repeated herein.

1.2 DEFINITIONS:

As used herein, the term "manufactured" applies to standard units usually mass-produced; and "fabricated" means items specifically assembled or made out of selected materials to meet individual design requirements.

1.3 GENERAL SUBMITTAL PROCEDURES:

1.3.1 Submit shop drawings, product data, and samples in accordance with the submittal schedule specified in Section 01325. Extension of Contract time will not be granted because of the Contractor's failure to make timely and complete submittals. If submittal of shop drawings does not generally adhere to the submittal schedule, the turn around time shall be appropriately adjusted. Do not purchase materials or equipment or begin construction activities covered by the required submittals until submittals have been reviewed and returned.

1.3.2 Transmittal: Accompany each submittal with a dated, signed and sequence numbered transmittal on prescribed submittal forms. Include information required by this form including project identification, name and address of Contractor and of subcontractor or supplier, a list of items included in the submittal, and identification of

drawing numbers, specification section and paragraph numbers to which the submittal pertains, and space for Contractor's review and approval stamp.

1.3.3 Check of Returned Submittals: Check the submittals returned for correction and ascertain if the corrections result in extra cost above that included under the Contract Documents, and give written notice within 5 days if, in Contractor's opinion, such extra cost results from corrections. By failing to so notify or by starting any Work covered by a submittal, Contractor waives all claims for extra costs resulting from required corrections.

1.4 SHOP DRAWINGS AND PRODUCT DATA:

1.4.1 Shop Drawings: The term "Shop Drawings" as used herein includes fabrication and installation, layout, and setting drawings; wiring and control diagrams; and other drawings, diagrams, schedules and data specially prepared for the Work by the Contractor, or a subcontractor, sub-subcontractor, manufacturer, supplier, or distributor to illustrate some portion of the Work.

.1 Check and verify all field measurements and submit for review, with such promptness as to cause no delay in the Work or in that of any other contractor or subcontractor, all shop or setting drawings and schedules required for the construction activities of the various trades. Shop Drawings shall be prepared at the Contractor's expense and shall be sent to the Owner/Owner’s Representative, carriage prepaid.

.2 Drawings shall show all information required by the applicable technical section and shall be in sufficient detail as may be required to show that fabricated materials, equipment or systems, and the positions thereof conform to the Contract Documents.

.3 Shop Drawings shall establish the actual detail of fabricated items, indicate proper relation of adjoining construction, amplify design details of mechanical and electrical equipment in proper relation to physical spaces in the structure, and incorporate minor changes of design or construction to suit actual conditions. Shop Drawings shall be drawn to scale and shall be completely dimensioned.

.4 Coordination Drawings and Field Layouts:

a. Where work by separate entities requires off-site fabrication of products and materials which must be accurately interfaced and closely intermeshed to produce required results, prepare coordination drawings to indicate how work shown by separate shop drawings will be interfaced, intermeshed, and sequenced for installation.

b. Prepare and submit coordination drawings and field layouts as required to solve tight field conditions and when required to coordinate the construction activities of several trades such as mechanical, electrical, and plumbing systems. Include dimensioned plans, elevations, sections, and details and give complete information particularly as to

kinds and types of materials and equipment, size and location of sleeves, inserts, attachments, chases, openings, conduits, ducts, boxes, and structural interferences.

c. Coordinate these coordination drawings and field layouts in the field for proper relationship to construction activities of applicable trades based on field conditions. Contractor shall have competent personnel readily available for coordinating, checking, and supervising of field layouts. The procedures for submittals and re submittals, and final distribution shall be as specified for Shop Drawings.

d. Coordinate preparation and processing of submittals with performance of the work so that work will not be delayed by submittal. Coordinate and sequence different categories of submittal for same work, and for interfacing units of work, so that one will not be delayed for coordination with review of another. Submit shop drawings of products specified below, together with the required coordination drawings. The Owner/Owner's Representative will not review these assemblies without all required shop drawings.

.5 Prepare Shop Drawings on sheet of same size as Contract Drawings or on 8-1/2" by 11" three-hole punched vellum-type sheets suitable for both xerox and ozalid reproduction.

.6 Each Shop Drawing shall have a title block containing the following information.

a. Name and location of the Project.
b. Name and address of the Contractor.
c. Name and address of the subcontractor, manufacturer, supplier or distributor as applicable.
d. Date, scale of drawings and identification number.
e. Space for the Contractor's review and approval stamp.

7. Submit 3 blue or black line prints and one reproducible transparency of each shop drawing.

1.4.2 Product Data: The term "product data" as used herein includes manufacturer's standard drawings, certificates of conformance, substantiating calculations, schedules, performance charts, instructions, brochures, diagrams, and other data furnished by the Contractor to illustrate materials or equipment for some portion of the Work.

.1 The data shall include all information required by the applicable technical section and shall be in sufficient detail to show that manufactured materials and equipment conform to the Contract Documents.

.2 Catalog Cuts: Clearly mark each copy to indicate the product or model as well as optional sizes, finishes or other features proposed for use. Delete inapplicable data.

.3 Submittal Preparation: Bind product data with sturdy, labeled covers with an index listing the contents. Loose unbound submittals will be returned without review. Submit 5 copies of all product data.

1.5 SAMPLES:

1.5.1 Furnish for review samples of the various materials, together with the finish thereon, as specified for and intended to be used on or in the Work. Samples shall be sent to the office of the Owner/Owner's Representative, carriage prepaid.

1.5.2 Submit samples to the Owner/Owner's Representative for distribution and review before purchasing, fabricating, applying, or installing such materials and finishes. The Owner/Owner's Representative will review and take action on samples within 20 working days of the Contractor's submittal. All actions by the Owner/Owner's Representative will be in writing.

1.5.3 Submit 2 copies of samples, other than field samples. A standard transmittal copy, attached at end of this section, shall accompany the sample and shall list all items being transmitted, designating their particular usage and location in the Work and shall be identified as to manufacturer, trade name, style, model. One approved sample will be returned to the Contractor.

1.5.4 Approval of a sample shall not be taken in itself to change or modify any contract requirement. Materials, finishes, and workmanship in the completed building shall be equal in every respect to that of the approved sample.

1.5.5 Unless otherwise specified, samples shall be 8" by 10" in size and shall be limited in thickness to a minimum consistent with sample analysis. In lieu thereof, the actual full size item may be submitted.

1.5.6 Samples of value may be returned to the Contractor for use in the Work after review, analysis, comparison or testing as may be required by the Owner/Owner's Representative, provided that the location is recorded and the samples bear temporary identification as samples.

1.5.7 Field samples shall be prepared at the site by the Contractor as specified in the various sections of these Specifications. Affected finished construction shall not be commenced until the Owner/Owner's Representative has given written approval of the field samples.

1.6 OWNER/OWNER REPRESENTATIVE'S ACTION:

1.6.1 The Owner/Owner's Representative will review the submittals and will affix the Owner/Owner Representative's initials or signature as follows:

.1 Submittals stamped "NO EXCEPTION TAKEN", require no further action and fabrication or construction may proceed. The Owner/Owner's Representative will return to the Contractor, the stamped transparency of Shop Drawings and 2 stamped copies of brochures, schedules, materials lists, and other product data, except where required otherwise.

.2 Submittals stamped "MAKE CORRECTIONS NOTED", require no further action and fabrication or construction may proceed contingent upon all corrections being made as noted. Quantities returned will be as specified in paragraph 1.6.1.1.

.3 Submittals stamped "REJECTED" or "REVISE AND RESUBMIT", require the Contractor to resubmit them with reasonable promptness and no fabrication or construction may begin. The Owner/Owner's Representative will return to the Contractor; one stamped transparency and one marked copy of shop drawings and one marked copy and 3 unmarked copies, all stamped, of brochures, schedules, materials lists, and other product data.

1.6.2 Resubmittals: If first or subsequent submittal is stamped "REJECTED" or "REVISE AND RESUBMIT", corrective action shall be taken and resubmittal procedure shall be same as for first submittal. The Contractor shall direct specific attention in writing on resubmitted Shop Drawing to revisions other than the correction requested by the Owner/Owner's Representative on previous submittals.

1.6.3 Distribution Copies: The Contractor shall be responsible for obtaining required prints and for distribution to subcontractors. Make distribution copies from the transparency bearing the Architect's stamp.

1.6.4 The Owner/Owner's Representative will check and take action on such drawings and schedules only for conformance with the design concept of the Work and compliance with information given in the contract documents. When so directed by the Owner/Owner's Representative, the Contractor shall make corrections required.

.1 The Owner/Owner's Representative will review the Shop Drawings as originally submitted as well as the first resubmittal thereof at his own cost.

.2 If additional resubmittals beyond the first resubmittal are made or required for failure to address previous comments or when resubmittal is incomplete, the Contractor shall pay the costs incurred by the Owner/Owner's Representative for reviewing them.

1.6.5 The shop drawings, product data and supporting data shall be prepared by the Contractor or his suppliers and subcontractors, but shall be submitted as the instruments of the Contractor.

1.6.6 The Contractor shall check the drawings of his suppliers and subcontractors as well as its own drawings before submitting them. In particular, the Contractor shall ascertain that the drawings meet all requirements of the Contract Drawings and Specifications and conform to the structural and space conditions. If such shop

drawings show variations from Contract Documents, whether because of standard shop practice or other reasons, the Contractor shall clearly describe such variations including other changes required to correlate the construction in his letter of transmittal.

1.6.7 Shop Drawings when submitted to the Owner/Owner's Representative for review shall be accompanied by a written statement signed by the Contractor, that the Shop Drawings have been checked by its Quality Control organization and found to be in accordance with the Contract Drawings and Specifications and that proper provision has been made to accommodate abutting construction. This statement may be in the form of an approval stamp bearing the Contractor's signature.

1.6.8 Submittals not requested in these documents or otherwise will be returned without comments.

1.6.9 Substantiating calculations, when specified, shall be prepared and signed by a registered Civil or Structural Engineer, employed by the Contractor.

1.6.10 The Owner/Owner Representative's review of Shop Drawings will be general only and shall not relieve the Contractor from responsibility for errors of any sort, for deviations from Drawings or Specifications, or for conflict with the construction activities of others that may result from such deviations. Owner/Owner Representative's review of a separate item does not indicate a review of an assembly in which the item functions.

1.6.11 Signature requirements, per California Code of Regulations (CCR), Title 24, Part 1 Section 7-115 (a) (b).

PART 2 - PRODUCTS (Not Applicable)

PART 3 - EXECUTION (Not Applicable)

END OF SECTION

34-003 – 03/04/2014

SHOP DRAWING SUBMITTAL

TO: City of Rancho Mirage
69825 Highway 111
Rancho Mirage, CA 92270
Attn: Project Manager

FROM: _____

_____

PROJECT: City of Rancho Mirage
Whitewater Park Expansion and Amphitheater Construction
71-560 San Jacinto Drive
Rancho Mirage, California 92270

CONTRACTOR SHALL COMPLETE THE FOLLOWING:

SPECIFICATIONS:

Section:_____ Title: _____Submittal No.

_____ Initial Submittal
_____ 2nd Submittal
_____ Submittal

Shop Drawing Schedule Date of Submittal:_____
Shop Drawing Schedule Date of Return:_____
Date Sent: _____ No. of Copies: _____ No. of Samples:

_____ No Substitutions

_____ Substitution: Request Form Previously Submitted

_____ Submittal Conforms with Construction Documents

Signature: _____ Contractor to verify all dimensions

Title:

I certify that the attached submittal conforms to the Contract Documents

* *

Owner/Owner's Representative will fill out the following and return to Contractor listed above:

ACTION:

_____ No Exception Taken

_____ Make Corrections Noted (Shop Drawings will not have Architect's stamp. Resubmit for record approval).

_____ Rejected / Resubmit

_____ Revise and Resubmit

__________ Date Sent

_____ Number of Items Returned

Description / Comments: ____

____

____

____

____

____

____

____

_____ See Attached Comments

Reviewed by: _____ Signature:

City of Rancho Mirage
69-825 Highway 111
Rancho Mirage, California 92270

Copies: _____ File

_____ Owner

_____ Other

SECTION 01422

REFERENCE STANDARDS

PART 1 - **GENERAL**

1.1 SUMMARY:

1.1.1 Section Includes: Applicability and availability of standards referenced or specified in these specifications.

1.1.2 Related Documents: The Conditions of the Contract and other sections of Division 1 apply to this section as fully as if repeated herein.

1.2 APPLICABILITY:

1.2.1 For products or workmanship specified by association, trades, or Federal Standards, comply with requirements of the standard, only to the extent required by the specific reference contained in these specifications.

1.2.2 The issue of the standard that is in effect for this Contract shall be the issue designated by the specific reference to the standard. Where the issue is not designated in the reference, the issue of the standard is the latest issue published as of the Bid date.

1.3 AVAILABILITY:

The standards are referenced in these specifications by acronyms which are listed below with the full name of the sponsoring organization and the address from which copies may be obtained.

AA Aluminum Association
900 19th Street NW, Suite 300
Washington, DC 20006
202/862-5100
www.aluminum.org

AABC Associated Air Balance Council
1518 K Street, NW, Suite 503
Washington, DC 20005
202/737-0202
www.aabchq.com

AAMA American Architectural Manufacturers

Association
1827 Walden Office Sq., Suite 104
Schaumburg, IL 60173-4268
847/303-5664
www.aamanet.org

AASHTO American Association of State Highway and Transportation Officials
444 North Capitol Street, Suite 249
Washington, DC 20001
202/624-5800
www.aashto.org

AATCC American Association of Textile Chemists and Colorists
P.O. Box 12215
One Davis Drive
Research Triangle Park, NC 27709-2215
919/549-8141
www.aatcc.org

ACI American Concrete Institute
P.O. Box 9094
Farmington Hills, MI 48333-9094
248/848-3700
www.aci-int.org

ACPA American Concrete Pipe Association
222 West Las Colinas Blvd., Suite 641
Irving, TX 75039-5423
972/506-7216
www.concrete-pipe.org

ADC Air Diffusion Council
104 South MichiganmAve., Suite 1500
Chicago, IL 60603
312/201-0101

AF&PA American Forest and Paper Association
1111 19th St., NW, Suite 800
Washington, DC 20036
800/878-8878
www.afandpa.org

AGA American Gas Association
400 N. Capitol St. N. W.

Washington, D.C. 20001
202/824-7000
www.aga.com

AHA American Hardboard Association
1210 W. Northwest Hwy
Palatine, IL 60067-1897
847/934-8800
www.hardboard.org

AHAM Association of Home Appliance Manufacturers
1111 19th Street NW, #402
Washington, DC 20036
202/872-5955
www.aham.org

ALA American Library Association
50 E. Huron
Chicago, IL 60611
800/545-2433

AI Asphalt Institute
Research Park Drive
P.O. Box 14052
Lexington, KY 40512-4052
606/288-4960
www.asphaltinstitute.org

AIA The American Institute of Architects
1735 New York Avenue, NW
Washington, DC 20006-5292
202/626-7300
www.e-architect.com

AISC American Institute of Steel Construction
One East Wacker Drive, Suite 3100
Chicago, IL 60601-2001
800/644-2400
www.aisc.org

AISI American Iron and Steel Institute
P.O. Box 4321
Chestertown, MD 21690
800/277-3850
www.steel.org

AITC American Institute of Timber Construction
7012 S. Revere Pkwy., Suite 140
Englewood, CO 80112

303/792-9559
www.aitc-glulam.org

ALCA Associated Landscape Contractors of America
12200 Sunrise Valley Drive, Suite 150
Reston, VA 20191
703/620-6363
www.alca.org

ALI Associated Laboratories, Inc.
P.O. Box 152837
1323 Wall St.
Dallas, TX 75315
214/565-0593

ALSC American Lumber Standards Committee
P.O. Box 210
Germantown, MD 20875
301/972-1700

AMCA Air Movement and Control Association International, Inc.
30 W. University Drive
Arlington Heights, IL 60004-1893
847/394-0150
www.amca.org

ANLA American Nursery and Landscape Association
1250 I Street, NW, Suite 500
Washington, DC 20005-3922
202/789-2900
www.anla.org

ANSI American National Standards Institute
11 West 42nd Street, 13th Floor
New York, NY 10036-8002
212/642-4900
www.ansi.org

APA APA-The Engineered Wood Association
2130 Barret Park Dr., Suite 102
Kennesaw, GA 30144-3681
770/427-9371
www.apawood.org

APA Architectural Precast Association
6710 Winkler Road, Ste. 8
Fort Myers, FL 33919
941/454-6989

www.archprecast.org

ARI Air Conditioning and Refrigeration Institute
4301 Fairfax Drive, Suite 425
Arlington, VA 22203
703/524-8800
www.ari.org

ARMA Asphalt Roofing Manufacturers Association
1156-15th Street, NW, Ste. 900
Washington, DC 20005
202/207-0917
www.asphaltroofing.org

ASA Acoustical Society of America
500 Sunnyside Blvd.
Woodbury, NY 11797
516/576-2360
www.acoustics.org

ASCE American Society of Civil Engineers-
World Headquarters 703/295-6300
1801 Alexander Bell Drive
Reston, VA 20190-4400
800/548-2723
www.asce.org

ASHRAE American Society of Heating, Refrigerating and
Air Conditioning Engineers
1791 Tullie Circle, NE
Atlanta, GA 30329-2305
800/527-4723 –or- 404/636-8400
www.ashrae.org

ASLA American Society of Landscape Architects
4401 Connecticut Ave., NW, 5th Floor
Washington, DC 20008-2369
202/686-2752
www.asla.org

ASME ASME International
Three Park Avenue
New York, NY 10016-5990
212/591-7722
www.asme.org

ASPE American Society of Plumbing Engineers
3617 Thousand Oaks Blvd., Suite 210
Westlake, CA 91362-3649
805/495-7120

ASQC American Society for Quality
611 E. Wisconsin Avenue
Milwaukee, WI 53201-3005
800/248-1946 – or -414/272-8575
www.asq.org

ASSE American Society of Sanitary Engineers
28901 Clemens Road
Westlake, OH 44145
440/835-3040
www.asse-plumbing.org

ASTM American Society for Testing and Materials
100 Barr Harbor Drive
West Conshohocken, PA 19428-2959
610/832-9500
www.astm.org

AWCI Association of the Wall and Ceiling Industries--International
307 E. Annandale Road, Suite 200
Falls Church, VA 22042-2433
703/534-8300
www.awci.org

AWI Architectural Woodwork Institute
1952 Isaac Newton Square
Reston, VA 20190
703/733-0600
www.awinet.org

AWPA American Wood Protection Association
P.O. Box 361784
Birmingham, AL 35236-1784
205/733-4077
www.awpa.com

AWS American Welding Society
550 NW LeJeune Road
Miami, FL 33126
800/443-9373 305/443-9353
www.amweld.org

AWWA American Water Works Association
6666 West Quincy Avenue
Denver, CO 80235
800/926-7337 –or - 303/794-7711
www.awwa.org

BHMA Builders' Hardware Manufacturers Association
355 Lexington Avenue, 17th Floor
New York, NY 10017-6603
212/297-2100

BIA Brick Institute of America
11490 Commerce Park Drive
Reston, VA 22091-1525
703/620-0010
www.bia.org

CE Corps of Engineers
(U.S. Department of the Army)
20 Massachusetts Avenue, NW
Washington, DC 20314
202/761-0660
CRD standards are available from:
U.S. Army Corps of Engineers
Waterways Experiment Station
Technical Report Distribution Section
Services Branch, TIC
3909 Halls Ferry Road
Vicksburg, MS 39180-6199
601/634-2696

CBM Certified Ballast Manufacturers Association
1422 Euclid Avenue, Suite 402
Cleveland, OH 44115-2094
216/241-0711

CCC Carpet Cushion Council
P.O. Box 546
Riverside, CT 06878-0546
203/637-1312
www.carpetcushion.org

CDA Copper Development Association
260 Madison Avenue, 16th Floor
New York, NY 10016-2401
800/232-3282 – or - 212/251-7200
www.copper.org

CGA Compressed Gas Association
1725 Jefferson Davis Hwy, Suite 1004
Arlington, VA 22202-4102
703/412-0900
www.cganet.com

CISCA Ceilings & Interior Systems Construction Association

1500 Lincoln Hwy, Suite 202
St. Charles, IL 60174
202/275-7703
www.cisca.org

CISPI Cast Iron Soil Pipe Institute
5959 Shallowford Road, Suite 419
Chattanooga, TN 37421
423/892-0137
www.cispi.org

CLFMI Chain Link Fence Manufacturers Institute
10015 Old Columbia Rd., #B-215
Columbia, MD 21046
301/596-2583
www.chainlinkinfo.org

CPSC Consumer Product Safety Commission
East West Towers
4330 East-West Hwy.
Bethesda, MD 20814
800/638-2772

CPPA Corrugated Polyethylene Pipe Association
432 N. Superior Street
Toledo, OH 43604
800/510-2772 – or - 419/241-2221

CRA California Redwood Association
405 Enfrente Drive, Suite 200
Novato, CA 94949
888/225-7339 – or - 415/382-0662
www.calredwood.org

CRI Carpet and Rug Institute
310 S. Holiday Avenue
Dalton, GA 30722-2048
800/882-8846 – or - 706/278-0232
www.carpet-rug.com

CRSI Concrete Reinforcing Steel Institute
933 N. Plum Grove Road
Schaumburg, IL 60173-4758
847/517-1200
www.crsi.org

CSSB Cedar Shake and Shingle Bureau
515 116th Avenue, NE, Suite 275
Bellevue, WA 98004-5294
206/453-1323

www.cedarbureau.org

CTI Ceramic Tile Institute of America
12061 W. Jefferson Blvd.
Culver City, CA 90230-6219
310/574-7800
www.ceramic-tile.com

DHI Door and Hardware Institute
14170 Newbrook Drive
Chantilly, VA 20151-2223
703/222-2010
www.dhi.org

DIPRA Ductile Iron Pipe Research Association
245 Riverchase Pkwy East, Suite O
Birmingham, AL 35244
205/402-8700
www.dipra.org

DOC Department of Commerce
5285 Port Royal Road
Springfield, VA 22161
703/605-6000

DOT Department of Transportation
400 Seventh Street, SW
Washington, DC 20590
202/366-4000

EIMA EIFS Industry Members Association
402 N. Fourth Street, Suite 102
Yakima, WA 98901-2470
800/294-3462 – or - 509/457-3500
www.eifsfacts.com

EJMA Expansion Joint Manufacturers Association
25 N. Broadway
Tarrytown, NY 10591-3201
914/332-0040
www.ejma.org

EPA Environmental Protection Agency
401 M Street, SW
Washington, DC 20460
800/490-9198
www.epa.gov

FCICA Floor Covering Installation Contractors Association
7439 Millwood Drive
West Bloomfield, MI 48322-1234
248/661-5015
www.fcica.com

FM Factory Mutual
1151 Boston-Providence Turnpike
P.O. Box 9102
Norwood, MA 02062-9102
617/255-4681
www.fmglobal.com

FCCHR Foundation for Cross-Connection Control and Hydraulic Research
University of Southern California
KAP-200 University Park MC-2531
Los Angeles, CA 90089-25319
213/740-2032

FS Federal Standards
(Available from GSA)
470 East L'Enfant Plaza, SW, Suite 8100
Washington, DC 20407
202/619-8925

FTI Facing Tile Institute
% Stark Ceramics
P.O. Box 8880
Canton, OH 44711
330/488-1211

GA Gypsum Association
810 First Street NE, Suite 510
Washington, DC 20002
202/289-5440
www.gypsum.org

GANA Glass Association of North America
3310 SW Harrison Street
Topeka, KS 66611-2279
913/266-7013
www.glasswebsite.com/gana

HMA Hardwood Manufacturers Association
400 Penn Center Blvd., Suite 530

Pittsburgh, PA 15235-5605
800/373-9663 – or - 412/828-0770
www.hardwood.org

HPVA Hardwood Plywood and Veneer Association
1825 Michael Farraday Drive
P.O. Box 2789
Reston, VA 20195
703/435-2900
www.hpva.org

IEEE Institute of Electrical and Electronic Engineers
445 Hoes Lane
Piscataway, NJ 08855-1331
800/678-4333 – or - 212/705-7900
www.standards.ieee.org

IESNA Illuminating Engineering Society of North America
120 Wall Street, 17th Floor
New York, NY 10005-4001
212/248-5000
www.iesna.org

ILI Indiana Limestone Institute of America
Stone City Bank Building, Suite 400
Bedford, IN 47421
812/275-4426
www.iliai.com

ITS Intertek Testing Services
P.O. Box 2040
3933 US Route 11
Cortland, NY 13045-7902
800/345-3851 – or - 607/753-6711
www.itsglobal.com

KCMA Kitchen Cabinet Manufacturers Association
1899 Preston White Drive
Reston, VA 22091-4326
703/264-1690
www.kcma.org

LMA Laminating Materials Association
116 Lawrence Street
Hillsdale, NJ 07642-2730
201/664-2700
www.lma.org

MBMA Metal Building Manufacturer's Association
1300 Sumner Avenue

Cleveland, OH 44115-2851
216/241-7333
www.mbma.org

MCAA Mechanical Contractors Association of America
1385 Piccard Drive
Rockville, MD 20850-4329
301/869-5800
www.mcaa.org

MFMA Maple Flooring Manufacturers Association
60 Revere Drive, Suite 500
Northbrook, IL 60062
847/480-9138
www.maplefloor.org

MIA Marble Institute of America
33505 State Street
Farmington, MI 48335
810/476-5558
www.marble-institute.com

MIA Masonry Institute of America
2550 Beverly Blvd.
Los Angeles, CA 90057
213/388-0427
www.masonryinstitute.org

ML/SFA Metal Lath/Steel Framing Association
(A Division of the NAAMM)
8 South Michigan Avenue, Suite 1000
Chicago, IL 60603
312/456-5590

MSS Manufacturers Standardization Society for the Valve and Fittings Industry
127 Park Street, NE
Vienna, VA 22180-4602
703/281-6613
www.mss-hq.com

NAA National Arborist Association
P.O. Box 1094
Amherst, NH 03031-1094
800/733-2622 – or - 603/673-3311
www.natlarb.com

NAAMM National Association of Architectural Metal Manufacturers
8 South Michigan Avenue, Suite 1000
Chicago, IL 60603
312/332-0405
www.naamm.org

NAIMA North American Insulation Manufacturers Association
44 Canal Center Plaza, Suite 310
Alexandria, VA 22314
703/684-0084
www.naima.org

NAPA National Asphalt Pavement Association
NAPA Building
5100 Forbes Blvd.
Lanham, MD 20706-4413
301/731-4748

NBGQA National Building Granite Quarries Association
1220 " L" Street, NW #100-167
Washington, DC 20005
800/558-2848
www.nbgqa.com

NCMA National Concrete Masonry Association
2302 Horse Pen Road
Herndon, VA 20171-3499
703/713-1900
www.ncma.org

NCPI National Clay Pipe Institute
P.O. Box 759
253-80 Center Street
Lake Geneva, WI 53147
414/248-9094
www.ncpi.org

NCRPM National Council on Radiation Protection and Measurements
7910 Woodmont Ave., Suite 800
Bethesda, MD 20814-3095
800/229-2652 – or - 301/657-2652
www.ncrp.com

NCSPA National Corrugated Steel Pipe Association
1255 23rd Street, NW, Suite 850

Washington, DC 20037
202/452-1700
www.ncspa.org

NEBB National Environmental Balancing Bureau
8575 Grovemont Circle
Gaithersburg, MD 20877-4121
301/977-3698
www.nebb.org

NECA National Electrical Contractors Association
3 Bethesda Metro Center, Suite 1100
Bethesda, MD 20814-5372
301/657-3110
www.necanet.org

NEI National Elevator Industry
185 Bridge Plaza North, Suite 310
Fort Lee, NJ 07024
201/944-3211

NEMA National Electrical Manufacturers' Association
1300 N. 17th Street, Suite 1847
Rosslyn, VA 22209
703/841-3200
www.nema.org

NFPA National Fire Protection Association
One Batterymarch Park
P.O. Box 9101
Quincy, MA 02269-9101
800/344-3555 – or - 617/770-3000
www.nfpa.org

NHLA National Hardwood Lumber Association
P.O. Box 34518
Memphis, TN 38184-0518
901/377-1818
www.natlhaardwood.org

NIST National Institute of Standards and Technology
100 Bureau Drive – Stop 1070
Gaithersburg, MD 20899-1070
301/975-6478
www.nist.gov

NIA National Insulation Association
99 Canal Center Plaza, Suite 222
Alexandria, VA 22314
703/683-6422

www.insulation.org

NOFMA National Oak Flooring Manufacturers Association
P.O. Box 3009
Memphis, TN 38173-0009
901/526-5016
www.nofma.org

NPA National Particleboard Association
18928 Premiere Court
Gaithersburg, MD 20879-1569
301/670-0604
www.pbmdf.com

NPCA National Paint and Coatings Association
1500 Rhode Island Avenue, NW
Washington, DC 20005-5597
202/462-6272
www.paint.org

NRCA National Roofing Contractors Association
P.O. Box 809261
Chicago, IL 60680-9261
800/323-9545
www.roofonline.org

NRMCA National Ready Mixed Concrete Association
900 Spring Street
Silver Spring, MD 20910
301/587-1400
www.nrmca.org

NSA National Stone, Sand and Gravel Association
2101 Wilson Blvd.
Arlington, VA 22201
800/342-1415 – or - 703/525-8788
www.nssga.org

NSF NSF International
P.O. Box 130140
Ann Arbor, MI 48113-0140
734/769-8010
www.nsf.org

NSSEA National School Supply and Equipment Association
8300 Colesville Road, Suite 250
Silver Spring, MD 20910
800/395-5550 – or - 301/495-0240
www.nssea.org

NTMA National Terrazzo and Mosaic Association
3166 Des Plaines Avenue, Suite 121
Des Plaines, IL 60018
800/323-9736 – or - 708/635-7744
www.ntma.com

NUSIG National Uniform Seismic Installation Guidelines
12 Lahoma Court
Alamo, CA 94526
510/946-0135

NWWDA The Window and Door Manufacturer's Door Association
1400 East Touhy Ave., Suite 470
Des Plaines, IL 60018
800/223-2301 – or - 847/299-5200
www.wdma.org

OSHA Occupational Safety and Health Administration
(U.S. Department of Labor)
200 Constitution Ave., NW
Washington, DC 20210
202/219-8148

PCA Portland Cement Association
5420 Old Orchard Road
Skokie, IL 60077-1083
847/966-6200
www.portcement.org

PCI Precast/Prestressed Concrete Institute
175 W. Jackson Blvd.
Chicago, IL 60604
312/786-0300
www.pci.org

PDCA Painting and Decorating Contractors of America
3913 Old Lee Hwy, Suite 33-B
Fairfax, VA 22030
800/332-7322 – or - 703/359-0826
www.pdca.com

PDI Plumbing and Drainage Institute
45 Bristol Drive
South Easton, MA 02375
800/589-8956 – or - 508/230-3516
www.pdionline.org

PEI Porcelain Enamel Institute
4004 Hillsboro Pike, Suite 224-B
Nashville, TN 37215
615/385-5357
www.porcelainenamel.com

RFCI Resilient Floor Covering Institute
401 E. Jefferson #102
Rockville, MD 20850
301/340-8580
www.rfci.com

RIS Redwood Inspection Service
c/o California Redwood Association
405 Enfrente Drive, Suite 200
Novato, CA 94949-7206
415/382-0662
www.calredwood.org

SDI Steel Deck Institute
P.O. Box 25
Fox River Grove, IL 60012
847/462-1930
www.sdi.org

SDI Steel Door Institute
30200 Detroit Road
Cleveland, OH 44145-1967
440/899-0010
www.steeldoor.org

SIGMA Sealed Insulating Glass Manufacturers Association
401 N. Michigan Avenue
Chicago, IL 60611-4267
312/644-6610

SJI Steel Joist Institute
3127 10th Avenue, North Ext.
Myrtle Beach, SC 29577-6760
843/626-1995
www.steeljoist.org

SMA Stucco Manufacturers Association
14006 Ventura Blvd.

Sherman Oaks, CA 91403
213/789-8733

SMACNA Sheet Metal and Air Conditioning Contractors
National Association, Inc.
4201 Lafayette Center Drive
Chantilly, VA 20151-1209
703/803-2980
www.smacna.org

SPI Society of the Plastics Industry, Inc.
Spray Polyurethane Division
1801 K Street, NW, Suite 600K
Washington, DC 20006
800/951-2001 – or - 202/974-5200
www.socplas.org

SPIB Southern Pine Inspection Bureau
4709 Scenic Highway
Pensacola, FL 32504-9094
850/434-2611
www.spib.org

SPRI SPRI
(Formerly: Single Ply Roofing Institute)
200 Reservoir Street Suite 309A
Needham, MA 02494
781/444-0242
www.spri.org

SSPC The Society for Protective Coatings
40 24th Street, 6th Floor
Pittsburgh, PA 15222-4656
412/281-2331
www.sspc.org

SWI Steel Window Institute
c/o Thomas Associates, Inc.
1300 Sumner Avenue
Cleveland, OH 44115-2851
216/241-7333
www.steelwindows.com

TCA Tile Council of America
100 Clemson Research Blvd.
Anderson, SC 29625
864/646-8453
www.tileusa.com

TPI Truss Plate Institute
583 D'Onofrio Drive, Suite 200

Madison, WI 53719
608/833-5900

TPI Turfgrass Producers International
1855-A Hicks Road
Rolling Meadows, IL 60008
800/405-8873 – or - 847/705-9898
www.turfgrasssod.org

UL Underwriters Laboratories, Inc.
333 Pfingston Road
Northbrook, IL 60062
800/704-4050 – or - 847/272-8800
www.ul.com

UNI Uni-Bell PVC Pipe Association
2655 Villa Creek Drive, Suite 155
Dallas, TX 75234
972/243-3902
www.uni-bell.org

USDA U.S. Department of Agriculture
14th St. and Independence Ave., SW
Washington, DC 20250
202/720-8732

USPS U.S. Postal Service
475 L'Enfant Plaza, SW
Washington, DC 20260-0010
202/268-2000

WA Wallcoverings Association
401 N. Michigan Avenue
Chicago, IL 60611-4267
312/644-6610
www.wallcoverings.org

WCLIB West Coast Lumber Inspection Bureau
P.O. Box 23145
Portland, OR 97281-3145
503/639-0651
www.wclib.org

WCMA Window Covering Manufacturers Association
355 Lexington Ave., 17th Floor
New York, NY 10017-6603
212/661-4261

WI Woodwork Institute
P.O. Box 980247

West Sacramento, CA 95798-0247
916/372-9943
www.woodworkinstitute.com

WLPDIA Western Lath/Plaster/Drywall Industries Association
8635 Navajo Road
San Diego, CA 92119
619/466-9070

WMMPA Wood Moulding & Millwork Producers Association
507 First Street
Woodland, CA 95695
800/550-7889 – or - 916/661-9591
www.wmmpa.com

WRI Wire Reinforcement Institute
P. O. Box 450
Findlay, OH 45839-0450
419/425-9473
www.wirereinforcementinstitute.org

WWPA Western Wood Products Association
Yeon Building
522 S.W. 5th Avenue, #500
Portland, OR 97204-2122
503/224-3934
www.wwpa.org

END OF SECTION

34-003 – 01/29/2014

SECTION 01457

TESTING AND INSPECTION

PART 1 - GENERAL

1.1 SUMMARY:

1.1.1 Section Includes: Testing laboratory services and inspections required during the course of construction.

1.1.2 Related Documents: The Conditions of the Contract and the other sections of Division 1 apply to this section as fully as if repeated herein.

1.2 REFERENCES:

The editions of the specifications and standards referenced herein, published by the following organizations, apply to the concrete reinforcement only to the extent specified by the reference. Refer to Section 01422 for information concerning availability and use of references.

American Institute of Steel Construction (AISC).
American Society for Testing and Materials (ASTM).
American Welding Society (AWS).

1.3 REGULATORY REQUIREMENTS:

Except as modified by the requirements specified herein, testing and inspection shall conform to the 2010 California Building Code (CBC).

1.4 TESTING LABORATORY:

1.4.1 Testing and inspections will be performed by an independent testing laboratory selected by the Owner.

1.4.2 Testing and inspection services which are performed shall be in accordance with requirements of the CBC, and as specified herein. Testing and inspection services shall verify that Work meets the requirements of the Contract Documents.

1.4.3 Test reports shall be signed by a Registered Civil Engineer licensed in the State of California.

1.5 PAYMENTS:

1.5.1 Costs of initial testing and inspection, except as specifically modified herein, or specified otherwise in technical sections, will be paid for by the Owner, providing such testing and inspection indicates compliance with Contract Documents. Initial tests and inspections are defined as the first tests and inspections as specified herein.

1.5.2 In the event a test or inspection indicates failure of a material or procedure to meet requirements of Contract Documents, costs for retesting and reinspection will be paid by the Owner and backcharged to the Contractor.

1.5.3 Additional tests and inspections not specified herein but requested by Owner, will be paid for by Owner, unless results of such tests and inspections are found to be not in compliance with Contract Documents, in which case the Owner will pay all costs for initial testing as well as retesting and reinspection and backcharge the Contractor.

1.5.4 Costs for additional tests or inspections required because of change in materials being provided or change of source or supply shall be paid by Contractor direct to testing laboratory.

1.5.5 Costs for construction activities which are required to correct deficiencies shall be borne by the Contractor.

1.5.6 Cost of testing which is required solely for the convenience of Contractor in his scheduling and performance of Work shall be borne by the Contractor.

1.5.7 Testing Laboratory will separate and identify on the invoices, the costs covering all testing and inspections which are to be backcharged to the Contractor as specified above.

1.5.8 Testing Laboratory will furnish to Owner, a cost estimate breakdown covering initial tests and inspections required by Contract Documents. Estimate will include number of tests, man-hours required for tests, field and plant inspections, travel time, and costs.

1.6 TEST AND INSPECTION REPORTS:

1.6.1 Testing Laboratory will certify in writing that construction specified or required to be tested and inspected conforms to or does not conform to Drawings, Specifications and applicable building codes.

1.6.2 The Testing Laboratory will make the following distribution of test and inspection reports:

Architect	1
Structural Engineer	1
Contractor	1
Owner	1
Governing Building Department	1

1.7 REPORTING TEST FAILURES:

Immediately upon Testing Laboratory determination of a test failure, the Laboratory will telephone the results of test to Owner/Owner's Representative. On the same day, Laboratory will send written test results to those named on above distribution list.

1.8 AVAILABILITY OF SAMPLES:

1.8.1 Contractor shall make materials required for testing available to Laboratory and assist in acquiring these materials as directed by Owner/Owner's Representative. The samples shall be taken under the immediate direction and supervision of the Testing Laboratory.

1.8.2 If construction which is required to be tested or inspected is covered up without prior notice or approval, such construction may be uncovered at the discretion of the Owner/Owner's Representative.

1.8.3 Unless otherwise specified, Contractor shall notify Testing Laboratory a minimum of 10 working days in advance of required tests, and a minimum of 2 working days in advance of required inspections. Extra construction activities resulting from a failure to notify the Laboratory shall be paid for by the Contractor.

1.8.4 Contractor shall give sufficient advance notice to Testing Laboratory in the event of cancellation or time extension of a scheduled test or inspection. Charges due to insufficient advance notice of cancellations or time extension shall be paid for by the Contractor.

1.9 REMOVAL OF MATERIALS:

Unless otherwise directed, materials not conforming to the requirements of Contract Documents shall be promptly removed from the Project site.

PART 2 - PRODUCTS (Not Applicable)

PART 3 - EXECUTION

3.1 EARTHWORK:

3.1.1 The Owner's Geotechnical Engineer will provide continuous inspection of fill and will field test fill and earth backfill as placed and compacted, and inspect excavations and subgrade before concrete is placed and provide periodic inspection of open excavations, embankments, and other cuts or vertical surfaces of earth. The Geotechnical Engineer will submit a report indicating that he has observed and tested fills and that in his opinion the fills were placed in accordance with the Project Specifications.

3.1.2 Contractor shall remove unsatisfactory material, reroll, adjust moisture, place new material, or in the case of excavations, provide proper protective measures, etc., to achieve the design criteria described in the soils report and civil Drawings.

3.1.3 Soils Test and Inspection Procedure:

.1 Allow sufficient time for testing and evaluation of results before material is needed. The Geotechnical Engineer will be sole and final judge of suitability of all materials.

.2 Laboratory compaction tests will be in accordance with ASTM D 1557.

.3 Field density tests will be made in accordance with ASTM D 1556.

.4 Number of tests will be determined by Owner/Owner's Representative. Materials in question may not be used pending test results.

.5 Excavation and embankment inspection procedure: Geotechnical Engineer will visually or otherwise examine such areas for bearing values.

3.2 TESTING OF CONCRETE:

3.2.1 Notify Owner/Owner's Representative and Testing Laboratory of brand and type of cement and sources of aggregates in time for review, sampling and testing, if required.

3.2.2 At least 3 cylinders for each 150 cubic yards of each separate mix design of concrete of required strength in excess of 2000 psi, or fraction thereof being placed each day will be taken.

3.2.3 Cylinders will be taken so as to represent as nearly as possible the batch of concrete from which they are taken. Sampling procedures shall conform to ASTM C 172.

3.2.4 Test cylinders shall be made and cured in compliance with ASTM C 31, except as modified herein.

3.2.5 Test cylinders from respective batches, one at age of 7 days, and one at age of 28 days. Test the third cylinder as directed if concrete strength is under that specified. Cylinder testing procedures shall conform to ASTM C 39 for strength.

3.2.6 Slump tests shall be taken as required by Testing Laboratory to certify compliance with Contract Documents. Slump shall be tested in accordance with ASTM C 143.

3.2.7 Minimum compressive strength of test cylinders, in pounds per square inch, shall not be less than the specified required design strength.

3.2.8 If minimum strengths of test cylinders fall below those specified, Owner/Owner's Representative may require test cores from hardened concrete to be taken and tested. Each core test, if taken, shall consist of 3 cores. Costs of such cores and tests shall be borne by the Contractor. Cores shall be taken in accordance with ASTM C 42, from locations selected by Owner/Owner's Representative. Contractor shall repair core holes with dry-pack or a nonshrinking mortar.

.1 Concrete tested by coring shall be considered acceptable if the average strength of 3 cores is equal to at least 0.85 of the minimum specified 28 day strength and if no single core strength is less than 0.75 of the minimum 28 day strength.

3.3 CONCRETE INSPECTIONS:

An authorized inspector of the Testing Laboratory shall be present at all times during placing of structural, reinforced cast in place concrete. Before placing concrete he will inspect and approve (if satisfactory) accuracy of all formwork and quantity and placement of all reinforcing steel. Concrete construction activities shall not proceed until inspections are complete and the inspected construction is approved.

3.4 CONCRETE MIX DESIGNS:

3.4.1 Refer to requirements specified in Section 03300.

3.4.2 In addition to original mix designs, provide new mix designs if change in brand or type of cement or change in source or gradation of aggregate is permitted, or if defective concrete occurs.

3.4.3 Contractor shall pay all costs for mix designs.

3.5 CONCRETE PLANT INSPECTION:

3.5.1 Manufacturer of structural concrete shall deliver to Inspector a certificate with each mixer truck in accordance with ASTM C 94, Section 16.1 and all items of 16.2 with the addition of type and brand of cement and admixtures, source and identification of aggregates. Certificates shall be from a public weightmaster. Inspector will not accept concrete which is not accompanied by and identified by the above certificate.

3.5.2 Periodic inspection of quality of materials used may be made by Testing Laboratory, as directed by Owner/Owner's Representative.

3.6 REINFORCING STEEL:

3.6.1 Tests:

.1 Tests shall be performed before the delivery of steel to Project Site. Steel not meeting specifications shall not be shipped to the Project.

.2 Testing procedure shall conform to ASTM A 615.

.3 Sample at the place of distribution, before shipment. Make one tensile test and one bending test from samples out of 10 tons, or fraction thereof, of each size and kind of reinforcing steel, where taken from bundles as delivered from the mill and properly identified as to heat number. Mill analysis shall accompany report. Where identification number cannot be ascertained, or where random samples are taken, make one series of tests from each 2-1/2 tons, or fraction thereof, of each size and kind of reinforcing steel. Samples shall include not fewer than 2 pieces, each 18 inches long, of each size and kind of reinforcing steel.

.4 Welds: Reinforcing bar welds shall be inspected. Tests of reinforcing bar welds shall be in accordance with ASTM E 709 and AWS D1.4.

3.6.2 Inspector will inspect all reinforcement for concrete construction for size, dimensions, locations and proper placement. Inspector shall be present during welding of all reinforcing steel.

3.7 CONCRETE MASONRY:

3.7.1 Field Tests for Strength of Mortar and Grout: The strengths specified for grout and mortar shall be verified during the progress of the Work by testing samples taken at the Project Site as follows.

.1 Mortar: Take at least 3 specimens each day of mortar placed that day. Spread a layer of mortar 1/2 inch to 5/8 inch thick on the masonry units and allow to stand for one minute. Remove the mortar and place it in a 2" by 4" cylinder in 2 layers, compressing the mortar into the cylinder using a flat end stick or fingers. Lightly tap the mold on opposite sides, level off and immediately cover molds and keep them damp until taken to the laboratory. After 48 hours, remove molds and place specimens in a fog room until tested in the damp condition. Samples shall be tested in accordance with the applicable portions of ASTM C 39 and shall exhibit a minimum ultimate compressive strength of 1800 pounds per square inch.

.2 Grout: Take at least 3 specimens each day of grout placed that day. On a flat nonabsorbent base, form a space approximately 3" by 3" by 6" using masonry units having the same moisture condition as those being laid. Line the space with a permeable paper or porous separator so that water may pass through the liner into the masonry units. Thoroughly mix or agitate grout to obtain a fully representative mix and place into molds in 2 layers. Puddle each layer with a 1" by 2" puddling stick to eliminate air bubbles. Level off and immediately cover molds and keep them damp until taken to the laboratory. After 48 hours, remove molds and place specimens in a fog room until tested in the damp condition. Samples shall be tested in accordance with the applicable portions of ASTM C 39 and shall exhibit a minimum ultimate compressive strength of 2000 pounds per square inch.

3.7.2 Continuous Inspection: At those locations so indicated, an authorized inspector of the Testing Laboratory shall perform continuous inspection of the structural reinforced masonry. The inspector shall be certified as a qualified masonry inspector by

the local Building Department. The masonry inspector shall be at the Project Site during all masonry construction and perform the following duties:

.1 Review Drawings and Specifications and meet with the Contractor to discuss requirements before masonry construction activities commence.

.2 Check brand and type of cement, lime (if used) and source of sand.

.3 Inspect the foundation to ascertain that it is clean and ready to receive units.

.4 Check reinforcing steel dowels for straightness, proper alignment, spacing, size and length.

.5 Observe proportioning of mortar, visually check aggregate to determine uniformity of grading, cleanliness and moisture.

.6 Observe manner in which units are laid up to insure that joints are full of mortar and kept tight. Inspect grout cells to assure that fins will not interfere with grouting. Instruct masons to keep grout cells clean of mortar droppings and inspect to determine compliance.

.7 Observe placing of grout continuously.

.8 Perform or supervise performance of required sampling and testing.

.9 Keep complete record of inspection of construction. Report weekly to the Architect the progress of the masonry inspection.

3.8 STRUCTURAL STEEL:

3.8.1 Mill certificates or affidavits and manufacturers' certification shall be supplied to the Inspector for verification of steel materials. Testing Laboratory shall be notified at least 2 working days in advance of fabrication and supplied with the reports so that he can make a shop inspection of the steel.

3.8.2 Tests of Steel Materials: Refer to Section 05120 for tests required for local stock or unidentified steel. Such testing shall be paid for by the Contractor.

3.8.3 General Inspection:

.1 Testing Laboratory will visit the fabricator's plant to verify that materials used check with the mill tests, affidavits of test reports, and that fabrication and welding procedures meet specifications.

.2 Testing Laboratory will visually check fabricated steel delivered to the Project against the working and reviewed shop drawings for compliance and he will make physical tests, measurements, as required to meet the Specifications. Shop fillet welds will be visually checked.

3.8.4 Special inspection for high tension bolting will be provided by the Testing Laboratory. Inspection shall be in accordance with AISC Specification for Structural Joints Using ASTM A 325 or A 490 Bolts.

3.8.5 Special Inspection will be provided by the Testing Laboratory for all welds, (shop and field). Welding procedures and joint preparation will be checked.

3.8.6 Ultrasonic Testing: All penetration multi-pass groove welds shall be subject to ultrasonic testing.

.1 All defective welds shall be repaired and retested with ultrasonic equipment.

.2 Initially, all multi-pass groove field welds shall be tested at the rate of 100 percent of each individual welder. If rejectable defects occur in less than 5 percent of the welds tested, the frequency of testing may be reduced to 25 percent. If the rate of rejectable defects increases to 5 percent or more, 100 percent testing shall be reestablished until the rate is reduced to less than 5 percent. The percentage of rejects shall be calculated for each welder independently.

.3 When ultrasonic indications arising from the weld root can be interpreted as either a weld defect or the backing strip itself, the backing strip shall be removed at the expense of the Contractor, and if no root defect is visible, the weld shall be retested. If no defect is indicated on this retest, and no significant amount of the base and weld metal have been removed, no further repair or welding is necessary. If a defect is indicated, it shall be repaired at the Contractor's expense.

.4 The ultrasonic instrumentation shall be calibrated by the technician to evaluate the quality of the welds in accordance with AWS D1.0.

.5 Should defects appear in welds tested, repairs shall be similarly inspected at the Contractor's expense and at the direction of the Architect until satisfactory performance is assured.

.6 Other methods of inspection, for example, X-ray, gamma ray, magnetic particle, or dye penetrant, may be used on welds if felt necessary by the Architect.

3.8.7 Lamellar Layers: All rolled members with web or flange thicknesses that are 1-1/2 inches or greater shall be ultrasonically tested for lamellar layers before and after welding. Should these defects occur, members will be rejected or corrections made subject to the approval of the Architect.

3.8.8 Ultrasonic Test for Base Metal Laminations: The material of the column flanges at all rigid frame connections shall be 100 percent tested over a minimum inclusive area of 6 inches above the girder framing into the column flange to 6 inches below the girder. The column flanges shall be tested after completion of all girder flange welding in a line of girders at a floor or roof level. Written reports on the testing of the

designated column flange areas shall be promptly submitted to the Owner. Laminations revealed by testing shall be deemed rejectable defects when any of the following occurs.

.1 Flaw indications that result in 100 percent loss of back reflection over the entire area of the defect.

.2 The area of the flaw is 2 square inches or more.

.3 The length of the flaw is 3 inches or longer.

3.8.9 The Contractor, at his own expense, may elect to also test the column flanges before fabrication in order to detect possible defects that would require difficult and expensive field repair. Testing before fabrication does not, however, take the place of the specified testing after completion of girder flange welding.

3.9 ASPHALTIC CONCRETE PAVING:

3.9.1 Asphaltic concrete mix design proposed by the Contractor shall be submitted to the Owner for review. Proposed mix shall be tested for conformance with the specifications, including grading, asphalt content and stability.

3.9.2 One sample of the mix shall be taken during each day's paving operation and tested for asphalt content and gradation.

3.9.3 Continuous inspection of the paving operation shall be provided. Testing Laboratory shall check for proper thickness, proper mix temperatures, proper rolling procedures and general workmanship.

END OF SECTION

34-003 – 03/04/2014

SECTION 01630

PRODUCT SUBSTITUTION PROCEDURES

PART 1 - GENERAL

1.1 SUMMARY:

1.1.1 Section Includes: Procedures for submittal of requests for substitution for materials.

1.1.2 Related Documents: The Conditions of the Contract and other sections of Division 1 apply to this section as fully as if repeated herein.

1.2 GENERAL REQUIREMENTS:

1.2.1 Whenever in the specifications products are by reference standard, any Product meeting the standards referenced may be used. Submit information on such products in accordance with Section 01334.

1.2.2 Whenever in the specifications any material, article or process is indicated or specified by trade, patent or proprietary name or name of manufacturer such specification for material, article or process, unless marked "no substitution", shall be deemed to be followed by the words "or equal" as accepted in writing by the Owner/Owner's Representative.

1.2.3 Where more than one proprietary name is specified, the Contractor may Provide any one of the materials or equipment specified. Use only one brand, kind of make of material or equipment for each specific purpose throughout the Work notwithstanding that similar materials or equipment of two or more manufacturers or producers may be specified for the same purpose.

1.2.4 Submit a written request for proposed substitutions to the Owner/Owner's Representative not later than 30 days after date of "Notice to Proceed". Submit proposed substitutions relating to a particular subcontract or trade at one time on the enclosed form, listing proposed items for indicated or specified items, and stating amounts for all variations in costs. If the Owner/Owner's Representative accepts any proposed substitution, such acceptance will be set forth in a Change Order. No substitution will be considered after this 30 day period.

1.2.5 Drawings have been detailed in compliance with the International Code Council Evaluation Service Reports (ICC ESRs) for material specified. If a proposed substitute material is accepted by the Owner/Owner's Representative, the Contractor will assume the responsibility for construction modifications and additional costs required by reason of this acceptance.

1.2.6 Where materials or items of manufacturer are specified in groups and are made or furnished by one manufacturer, no substitution will be considered that is not

made or furnished similarly by one manufacturer. Where the Contractor proposes to use a system of equipment other than that specified or detailed on the Drawings the substitution shall be proposed as a complete system.

1.3 REQUIREMENTS FOR SUBMITTING SUBSTITUTIONS:

1.3.1 Submit with written request for a proposed substitution all data Substantiating request as well as a "Certificate of Suitability" certifying that the proposed substitution is equal or better in all respects to that specified and that it will, in all respects perform the function for which it is intended. Include with request all required samples. Submit 3 copies of all written requests and data for proposed substitutions.

1.3.2 Submit complete information to the Owner/Owner's Representative so that proper evaluation can be made. The burden of proof of equality of the substituted item shall be on the Contractor. Acceptance of such substitutions is entirely at the discretion of the Architect and Owner. All materials or items of manufacturer, which the Contractor proposes to substitute for those specified, must be accepted by the Owner/Owner's Representative before they may be ordered.

1.3.3 The Owner/Owner's Representative will issue to the Contractor a list setting forth those items for which substitutions are accepted. No substitution will be accepted for any materials or item of manufacture called for in the Contract Documents which is not of equal quality and utility and which does not possess equal design or color characteristics to those of the specified material or item.

1.3.4 If, in the opinion of the Architect or Owner, the proposed substitution is not equal or better in every respect to that so indicated or specified, or was not submitted for acceptance in the manner outlined above, the Contractor shall furnish the specified materials.

1.3.5 It shall be the responsibility of the Contractor, in proposing a substitution for any item herein specified, to inform all other trades, vendors, and subcontractors of effects said substitution will have upon their construction activities or products. Failure to so notify shall require that the Contractor make all payments arising from alterations in specified materials or methods necessary to complete the Work in an approved and acceptable manner.

PART 2 - PRODUCTS (Not Applicable)

PART 3 - EXECUTION (Not Applicable)

END OF SECTION

34-003 – 03/04/2014

CONTRACTOR REQUEST TO SUBSTITUTE
MATERIALS, PRODUCTS OR SYSTEMS

CONTRACTOR:_____

PROJECT: _____

DATE: _____ BY: _____

PRODUCT, MATERIAL OR SYSTEM:

_____

_____

_____

_____

_____

COST INCREASE OR DECREASE: _____

CONSTRUCTION SCHEDULE SHORTENING OR
LENGTHENING IN CALENDAR DAYS: _____

DOES THIS SUBSTITUTION HAVE TO BE REVIEWED BY THE BUILDING DEPARTMENT OR OTHER GOVERNMENTAL AGENCIES? _____ yes _____ no

DOES THIS SUBSTITUTION REQUIRE CHANGES TO THE DRAWING OR SPECIFICATION? _____ yes _____ no

REASON FOR SUBSTITUTION REQUEST: (CHECK ONE OR MORE)

PRODUCT OR MATERIAL IS EQUAL - NO COST SAVINGS _____

PRODUCT OR MATERIAL IS EQUAL - COST SAVINGS _____

ORIGINAL SPECIFIED PRODUCT OR MATERIAL
IS UNAVAILABLE _____

ORIGINAL SPECIFIED PRODUCT OR MATERIAL
WILL DELAY PROJECT _____ CALENDAR DAYS _____

PRODUCT OR MATERIAL WILL SHORTEN CONSTRUCTION
SCHEDULE _____ CALENDAR DAYS _____

PRODUCT OR MATERIAL IS NOT EQUAL - COST SAVINGS _____

SECTION 01740

CLEANING

PART 1 - GENERAL

1.1 SUMMARY:

1.1.1 Section Includes: Cleanup during construction and final cleaning of the building(s) before acceptance by the Owner, including waxing and polishing as specified herein and in other sections when specified.

1.1.2 Related Documents: The Conditions of the Contract and other sections of Division 1 apply to this section as fully as if repeated herein.

PART 2 - PRODUCTS

2.1 MATERIALS:

Use cleaning materials which will not create hazards to health or property and which will not damage materials. Use cleaning materials and methods recommended by the manufacturer of the surface material to be cleaned. Use cleaning materials only on surfaces recommended by the cleaning material manufacturer.

PART 3 - EXECUTION

3.1 CLEANUP DURING CONSTRUCTION:

3.1.1 It is required that the entire site be kept in a neat and orderly condition, and the Architect may, at any time during construction, order a general cleanup of the site as a part of the Work.

3.1.2 Dispose of waste, trash, and debris in a safe, acceptable manner, in accordance with applicable laws and ordinances and as prescribed by authorities having jurisdiction. Bury no such waste material and debris on the site. Burning of trash and debris on the site will not be permitted.

3.1.3 Location of dump for trash and debris and length of haul is the Contractor's responsibility.

3.2 FINAL CLEANING OF BUILDING(S):

3.2.1 Before final inspection by the Architect and after all construction activity is essentially complete, thoroughly clean the building(s), utilizing professional building cleaners. Items to be cleaned include, but are not limited to; all glass, plastic, doors, opening frames, grilles, trim, exposed nonferrous metal surfaces, floor covering, light

fixtures and plates, plumbing fixtures and trim, and all finish surfaces throughout the construction. Thoroughly remove ink trademarks from plastic laminate surfaces. Vacuum clean the building(s) and remove all spots, smears, dust, debris, hand prints and defacements of every sort, including those of vandals. Follow the recommendations of the manufacturer of the materials and items to be cleaned for all cleaning, polishing, and treatment such as waxing.

3.3 FINAL SITE CLEANUP:

Also before final inspection, thoroughly clean the entire site and put it into a neat, acceptable condition. Remove from the entire site all construction waste and unused materials, dunnage, loose rock and stones, excess earth, roots, weeds, and all debris of any description resulting from the Work. Hose down and scrub where necessary all new concrete and asphalt pavement and walks dirtied as a result of the work. Thoroughly remove mortar droppings from concrete walks and other pavements.

END OF SECTION

34-003 – 01/29/2014

SECTION 01770

CLOSEOUT SUBMITTALS AND PROCEDURES

PART 1 - GENERAL

1.1 SUMMARY:

1.1.1 Section Includes: Closing out the Contract and assisting in Owner's final inspection.

1.1.2 Related Documents: The Conditions of the Contract and other sections of Division 1 apply to this section as fully as if repeated herein.

1.2 REQUIREMENTS PREPARATORY TO FINAL INSPECTION:

1.2.1 Remove temporary facilities from the site as specified in Division 1.

1.2.2 Thoroughly clean the building and site as specified in Section 01740.

1.2.3 All plumbing and mechanical equipment shall operate quietly and free from vibration. Properly adjust, repair, balance, or replace equipment producing objectionable noise or vibration in the occupied areas of the building. Provide additional brackets, bracing, other methods to prevent objectionable noise or vibration. All systems shall operate without humming, surging, or rapid cycling.

1.2.4 Properly mount all operating instructions for equipment and post as specified in their respective sections.

1.2.5 Record (as-built) drawings shall be completed, signed, and submitted to the Owner as specified herein.

1.2.6 Submit to the Owner, the material and equipment maintenance instructions, as specified in the body of the Specifications.

1.2.7 Submit to the Owner, all guarantees and warranties as specified in the General Conditions.

1.2.8 Submit to the Owner, "Contractor's Affidavit of Payment of Debts and Claims", A.I.A. Document G-706; and "Contractor's Affidavit of Release of Liens", A.I.A. Document G-706A.

1.2.9 Deliver all tools which are a permanent part of equipment installed in the Work to the Owner.

1.2.10 Deliver all keys, construction and permanent, properly identified, to the Owner.

1.3 FINAL INSPECTION:

1.3.1 After all requirements preparatory to the final inspection have been completed as herein specified, notify the Owner/Owner's Representative to perform the final inspection. Give notice at least 3 working days in advance of the time the final inspection is to be performed. Final approval of the Work shall be in conformance with 7-155, Part 1, Title 24 California Code of Regulations (CCR).

1.3.2 The Contractor or his principal superintendent, authorized to act in behalf of the Contractor, shall accompany the Architect and Owner on the final inspection tour, as well as principal subcontractors that the Architect or Owner may request to be present.

1.3.3 If the Work has been completed in accordance with the Contract Documents, and no further corrective measures are required, the Owner will accept the Work and will file for the Notice of Completion.

1.3.4 If the Work has been substantially completed in accordance with the Contract Documents, and only minor corrective measures are required, the Contractor shall prepare a punch list of items to be corrected and the Owner will conditionally accept the Work and will file for the Notice of Completion based upon the Contractor's assurance that the corrective measures will be completed within the shortest practicable time period.

1.3.5 If the Work has not been substantially completed in accordance with the Contract Documents, and several corrective measures are still required, the Owner will not accept the Work or file for the Notice of Completion. Instead, a punch list shall be prepared by the Contractor, based on the information gathered from the final inspection. The Contractor shall complete or correct the items listed on this punch list and then call for another final inspection, following the procedure outlined above.

1.3.6 Upon acceptance of the Work by the Owner, Contractor shall submit his request for final and acceptance payment. Final payment will not be made by the Owner, however, until 35 days after filing for the Notice of Completion.

1.4 RECORD DRAWINGS:

1.4.1 The Architect shall provide to the Contractor, at the Owner's expense, a set of reproducible or electronic drawings of the original Contract Documents, which shall be used for recording the "As-Built" condition of the work.

.1 Provide additional Drawings as are required to properly describe changes in the Work.

.2 Record Drawings shall be prepared carefully and neatly by a competent drafter, familiar with the trade involved, using drafting methods acceptable to the Architect.

1.4.2 Concealed shall mean construction installed underground or in an area which cannot be readily inspected by use of access panels, inspection plates or other removable features.

1.4.3 Maintain a set of Record Drawings at the Project site. Keep Record Drawings current and legible, and available for inspection at all times by the Architect. Show all changes in the Work, or Work added on the Record Drawings in a contrasting color.

1.4.4 In showing changes in the Work, or added Work, use the same legends that are used on the Contract Drawings. Indicate exact locations by dimensions and exact elevations. Give dimensions from a permanent point.

1.4.5 Provide Record Drawings clearly showing the following:

.1 Differences in size, location, materials between the Contract Work as drawn and as installed for all exposed and concealed construction.

.2 Construction added to the Contract which is not indicated on the Contract Drawings.

.3 Location of all significant Work concealed inside the building, including ductwork, electrical lines and conduit, and plumbing piping.

.4 Dimensions and locations to a constructed building element of all major structural components including posts, columns, shear walls, load bearing walls, and major load bearing beams, and framed openings for future work.

.5 Locations of underground work including points of connection, valves, manholes, catch basins, capped stub-outs and invert elevations.

.6 Actual numbering of each electrical circuit.

1.5 OPERATION AND MAINTENANCE DATA SUBMITTAL:

1.5.1 Submit to the Owner for approval, 5 copies of complete operation and maintenance data as specified herein and in other sections of these specifications. Submit data a minimum of 30 days before completion of the Contract. The Contract will not be considered complete until this data has been reviewed by the Owner.

1.5.2 Assemble all data required herein, except that to be mounted in frames, in three-ring loose-leaf binders, complete with index, index dividers, and permanently attached exterior label on cover.

1.5.3 Data Required:

.1 Manufacturer's Manuals: Submit complete installation, operation, maintenance and service manuals, and printed instructions and parts lists for all materials and equipment where such printed matter is regularly available from the manufacturer. This includes, but is not limited to such service manuals as may be sold by the manufacturer covering the operation and maintenance of his items, and complete replacement parts lists sufficiently detailed for parts replacement ordering to manufacturer. Bound publications need not be assembled in binders.

.2 Equipment Nameplate Data: Submit a typewritten list of all mechanical and electrical equipment showing exact equipment nameplate data. Identify equipment by means of names, symbols, and numbers used in the contract documents.

.3 System Operating Instructions: Submit typewritten instructions covering operation of the entire system as installed (not duplicating manufacturer's instructions for operating individual components). Include schematic flow and control diagrams as appropriate and show or list system valves, control elements, and equipment components using identification symbols and numbers. List rooms, area of equipment served, and show proper settings for valves, controls, and switches.

.4 System Maintenance Instructions: Submit typewritten instructions covering routine maintenance of system. List each item of equipment requiring inspection, lubrication, or service and briefly describe such maintenance, including types of lubricants and frequency of service. It is not intended that these instructions duplicate manufacturer's detailed instructions. Give name, address and phone number of nearest firm authorized or qualified to service equipment or provide parts.

.5 Wall Mounted Data: Frame one set of typewritten system instructions and diagrams as required under Paragraphs .3 and .4 above, covered with glass and mounted in locations as directed by the Owner. This set of instructions is in addition to the 5 required herein.

1.6 INSTRUCTION OF OWNER'S MAINTENANCE PERSONNEL BY CONTRACTOR:

1.6.1 After Work under this contract is completed, tested and before acceptance, and not less than 5 days after submittal of the operation and maintenance data required in Paragraph 1.5, operate all systems for a period of three 8-hour days during which time keep on the project competent personnel familiar with the items installed whose full-time assignment will be to instruct the Owner's maintenance personnel in the operation and maintenance of the equipment and systems.

1.6.2 Instructions from manufacturer's representatives required under other sections of this specification shall be conducted during this period. Do not conduct this instruction period before completion of piping and equipment labeling required.

1.6.3 Make arrangements and notices for operation and instruction periods through the Owner.

1.6.4 This 3 day instruction period shall be in addition and subsequent to any period of operation, test and adjustment called for elsewhere in this specification.

1.7 MANUFACTURERS' WARRANTIES:

1.7.1 Deliver all manufacturers' warranties required by the Contract Documents, with Owner named as the beneficiary. In addition, for all equipment and machinery, or components thereof, bearing a manufacturers' warranty that extends for a longer time period than the Contractor's warranty, secure and deliver the manufacturers' warranties in the same manner.

1.7.2 Form of Warranty: Submit written warranties, except manufacturers' standard printed warranties, on the Contractor's, subcontractor's, material suppliers', or manufacturer's own letterhead, addressed to the Owner. Submit all warranties in duplicate, and in the form shown on the following page, modified as approved to suit the conditions pertaining to the warranty.

1.7.3 Submission of Warranties: Collect and assemble all written warranties into a bound booklet form, and deliver them to the Owner for final review and approval.

PART 2 - PRODUCTS (Not Applicable)

PART 3 - EXECUTION (Not Applicable)

END OF SECTION

34-003 – 03/04/2014

(To be typed on Letterhead of Contractor responsible for Work to be guaranteed.)

GUARANTEE FOR

_____
(Work)

We hereby guarantee that the _____ Work

performed for the construction of _____
(Name & Address of Project per Specifications)

_____
has been performed in accordance with the Drawings and Specifications and that the Work as installed will fulfill the requirements of the Guarantee included in the Specifications. We agree to repair or replace any or all of our Work, together with any adjacent Work which may be displaced by so doing, that may prove to be defective in its workmanship or materials within a period of _____ (_____) year(s) from date of acceptance of the above named project

by the Owner, _____

_____
(Name of Owner per Specifications)

without any expense whatsoever to the said Owner, ordinary wear and tear and unusual abuse or neglect excepted.

In the event of our failure to comply with the above mentioned conditions within thirty (30) days after being notified in writing by the Owner, we collectively or separately do hereby authorize the Owner to proceed to have said defects repaired and made good at our expense and we will honor and pay the costs and charges therefrom upon demand.

Date: _____ Signed: _____
(Subcontractor) (Supplier)

Date: _____ Signed: _____
(Contractor)

Local Representative to be contacted for services:

Name: _____ Phone No. _____

Address: _____

_____

(Sample Form)

SECTION 01785

WARRANTIES

PART 1 - GENERAL

1.01 RELATED REQUIREMENTS

A. General Conditions of the Contract: Warranty and correction of work.

B. Section 01770 - Contract Closeout: Contract closeout procedures and submittals.

C. Individual specification sections: Provision of warranties required for specific products or work.

1.02 FORM OF SUBMITTALS

A. Form of warranty: Written warranties, except manufacturer's standard printed warranties, shall be on the contractor's subcontractor's, material supplier's, or manufacturer's own letterhead, addressed to the owner. All warranties shall be submitted in duplicate, and in the format supplied with this section, modified as approved to suit the conditions pertaining to the warranty.

B. Bind warranties in commercial quality 8½" x 11" binders, with hardback, cleanable, plastic covers.

C. Label cover of each binder with typed or printed title "WARRANTIES", with title of project, name, address and telephone number of contractor, and the name of responsible principal.

D. Table of Contents: Neatly typed, in the sequence of the table of contents of the project manual, with each item identified with the number and title of the specification section in which specified, and the name of product or work item.

E. Separate each warranty with index tab sheets keyed to the table of contents listing. Provide full information, using separate typed sheets as necessary. List subcontractor, supplier, and manufacturer, with name, address, and telephone number of responsible principal.

1.03 PREPARATION OF SUBMITTALS

A. Obtain warranties, executed in duplicate by responsible subcontractor, suppliers, and manufacturers, within (10) days after completion of the applicable item of work. Except for items put into use with owner's permission, leave date of beginning of time of warranty until the date of final acceptance of the project by the owner.

B. Verify that documents are in proper form, contain full information, and are notarized.

C. All warranties shall be signed by both the general contractor and the appropriate subcontractor.

D. Retain warranties until time specified for submittal.

1.04 TIME OF SUBMITTALS

A. For equipment or component parts of equipment put into service during construction with owner's permission, submit documents within ten (10) days after acceptance.

B. Make other submittals prior to final application for payment.

END OF SECTION

34-003 – 01/29/2014

SECTION 01789

PROJECT RECORD DOCUMENTS

PART 1 - GENERAL

1.1 SUMMARY:

1.1.1 Section Includes: The preparation and submittal of drawings of the work as it is built, job record and as-built drawings.

1.1.2 Related Documents: The Conditions of the Contract and other sections of Division 1 apply to this section as fully as if repeated herein.

1.2 GENERAL:

1.2.1 The Contractor shall provide complete as-built drawings in accordance with the General Conditions and as specified herein. The drawings shall indicate the actual work as it is built, including work added by addenda and change orders. This does not include changes to the structural framework.

1.2.2 The Contractor shall purchase from the Architect, at the cost of the reproduction, one complete set of reproducible copies of the Contract Document Drawings. These reproducible copies shall be used for the final as-built drawings.

1.3 JOB RECORD PRINTS:

1.3.1 One complete set of black line prints of the contract documents shall be used for the job record prints.

1.3.2 The job record prints shall be kept in the custody of the Owner's Inspector and shall not be used for any other purpose. The Owner's Inspector will ensure that the record prints are up to date, but he shall not be responsible for their accuracy. The Contractor's civil engineer shall keep records of all concealed work, as it is installed, on these prints.

1.3.3 Records shall be kept current, in a neat and legible manner, and shall be available for inspection at all times by the Architect. All entries shall be made on the sheet where the work was originally shown. Show all changes in the work on the record drawings, in a contrasting color.

1.3.4 Do not conceal any work until dimensions are recorded on the job record prints. Should any work be concealed before it is recorded on the record drawings, and verified by the Contractor's civil engineer, the Contractor shall expose the work, at his expense, so that dimensions can be taken and recorded.

1.3.5 All dimensions shall be taken from permanent, easily identifiable reference points.

1.3.6 Progress Payments: Progress payments will not be approved by the Inspector until all concealed work, to date, is properly recorded on the record prints. The Inspector will indicate the condition of the record prints in his monthly report.

1.4 WORK REQUIRED TO BE RECORDED:

1.4.1 Location of the following work concealed inside the building in areas which cannot be readily inspected by use of access or inspection panels or other removable features shall be recorded on the record drawings:

.1 Roof structural system

.2 Fire sprinkler piping and appurtenances

.3 Heating ventilating and air conditioning duct work

.4 Electrical conduit and wiring

.5 Plumbing piping.

1.4.2 The accuracy of the location of the following site work shall be recorded on the job record prints. The Contractor shall employ a civil engineer to prepare and certify the accuracy of the final as-built drawings. The civil engineer shall be approved in writing by the Architect.

.1 Structures, located with respect to property lines or monumented corners.

.2 Location and elevation of concrete and asphalt concrete paving, topsoil and earth.

.3 Location of fencing and gates.

.4 Finish grades at 50 foot intervals.

.5 Location and elevation of all underground work, including but not limited to, electrical conduits, flow line elevations, storm drain lines, sewer lines and clean-outs, plugged tees, capped ends, catch basins, drainage structures and man holes.

.6 Location of all concealed work in areas which cannot be readily inspected by use of access or inspection panels or other removable features.

1.4.3 An aerial survey will not be acceptable for the as-built drawings.

1.5 FINAL AS-BUILT DRAWINGS:

1.5.1 At the conclusion of the work, the Contractor's civil engineer shall prepare the final as-built drawings on the reproducible copies of the contract documents from the information recorded on the job record prints.

1.5.2 The reproducible copies shall be changed to indicate the work as it is built. The exact horizontal and vertical locations of all concealed work shall be dimensioned as it is built. The same information required on the job record prints shall be required on the final as-built drawings, except the final as-built drawings shall be changed to show only the work as it is built. All other irrelevant lines, dimensions and printing which do not indicate the as-built conditions shall be removed.

1.5.3 The changes shall be done in a neat, clear, professional manner and shall be indicated on the sheets where the work was originally shown. Use the same legends and symbols used on the Contract Documents.

1.5.4 The Contractor's civil engineer shall sign and stamp the final as-built drawings.

1.5.5 Prior to final inspection, the Contractor shall deliver the final as-built drawings and the job record prints to the Architect. If the final as-built drawings do not meet the requirements specified herein, the drawings will be returned to the Contractor for correction. The Architect will review the drawings for legibility and quality of drafting only, not for accuracy.

1.5.6 The final payment by the Owner is contingent on the Architect's acceptance of the final as-built drawings.

PART 2 – PRODUCTS (Not Applicable)

PART 3 – EXECUTION (Not Applicable)

END OF SECTION

34-003 – 01/29/2014

SECTION 02222

DEMOLITION FOR REMODELING

PART 1 - GENERAL

1.1 SUMMARY:

1.1.1 Section Includes: Alteration work consisting of necessary demolition and removal of existing work and installation of new work as indicated and specified in applicable technical sections of the Specifications.

1.1.2 Related Documents: The Conditions of the Contract and Division 1 apply to this section as fully as if repeated herein.

1.2 ALTERATIONS:

1.2.1 Verification of Existing Conditions:

.1 Verify, at the site, conditions affecting the work. Obtain accurate field dimensions of related areas, spaces, openings, levels, and items of adjacent work. Before commencing work, report to the Architect/Designer in writing, discrepancies between the drawings and specifications and the actual field conditions. Commencement of work shall constitute acceptance of all adjacent conditions affecting the work of the section involved.

.2 Drawings show the existing conditions as they are believed to exist. Examine the existing conditions, alter the existing building as indicated, complete, and make required connections between existing and new. Protect existing utilities and structures.

1.2.2 Portions of existing structure where existing work is to be demolished or removed, and where new work is to be done, connections made, materials handled or equipment moved and relocated, shall be temporarily protected. Temporary protection shall be such that interior of existing structure will at all times be protected from dust and weather inclemency. Provide suitable temporary dust proof barrier partitions with hinged doors in existing structure where and as directed and approved by the Architect/Designer. Protect temporary openings in exterior walls by temporary weatherproof plywood closures. The Contractor will be held responsible for damage to existing structure and contents by reason of insufficiency of such protection.

1.2.3 Where alterations occur, or new and old work join, immediate adjacent surfaces, or so much thereof as is required by involved conditions, shall be cut, removed, patched, repaired or refinished and left in as good condition as existed before commencing work. Materials and workmanship employed in alterations involving new construction, unless otherwise indicated or specified, shall conform to that of original work.

.1 Where existing materials to remain interfere with installation of new work, remove existing materials. After installation of new work is complete, or in conjunction with installation of new work as applicable, reinstall existing materials, patch and refinish, or provide new to match existing.

1.2.4 Relocate certain materials and equipment as indicated or specified. Refinish certain existing surfaces as specified in applicable technical sections. Repair and refinish relocated materials and equipment as necessary to leave finished work in good condition.

1.2.5 Salvaged materials occurring from work wrecked or removed shall become property of the Contractor (unless otherwise noted in the Specifications or Drawings to remain property of the Owner) and shall be removed by him from project site. Salvaged material specified or noted on Drawings to be retained by the Owner shall be protected, stored where directed. Construction equipment and mechanical and electrical equipment remaining the property of the Owner shall be carefully removed and stored on project site where directed, except that such items indicated or specified to remain or be relocated shall be set and connected in indicated location.

1.2.6 Before commencing alteration, removal and demolition work, prepare and submit for review by the Architect/Designer and Owner, a schedule showing commencement, order and completion dates of various parts of the work.

1.2.7 Before starting work relating to existing utilities (electrical, sewer, water, heat, gas, fire lines, etc.) that will temporarily discontinue or disrupt service to existing buildings, give 2 working days notice to the Architect/Designer and Owner and obtain their approval in writing before proceeding with this phase of the work.

1.3 REGULATORY REQUIREMENTS:

Demolition work shall conform to the California Fire Code, Article 87, "Fire Safety During Construction, Alteration or Demolition of a Building".

1.4 SUBMITTALS:

1.4.1 Schedule: Submit schedule indicating proposed methods and sequence of operations for demolition work for remodeling. Include coordination for shut-off, capping, and continuation of utility services as required, together with details for dust and noise control protection.

.1 Provide detailed sequence of demolition and removal operations to ensure uninterrupted progress of Owner's on-site operations.

1.4.2 Submittal procedures and quantities are specified in Division 1.

1.5 IMPACT ON OWNER'S OPERATIONS:

1.5.1 If and when it should be necessary for the Contractor to impact the day-to-day operations of Owner's functions in order to pursue the work, the Contractor shall furnish 3 working days notice to the Owner and coordinate the means and timing to avoid, minimize, or circumvent such impacts. The Owner reserves the right to assess and anticipate such impacts and the right to stop or postpone the work until a mutually satisfactory time and means can be agreed upon. Costs incurred due to delays caused by such impacts on Owner's functions will be negotiated at the time of the occurrence of such delay. Typical impacts shall include, but not be limited to, the following:

.1 Interruption of utility service serving the existing buildings, areas, or functions.

.2 Blockage of or inhibiting access to existing entry, exit, dock, delivery or pickup point, driveway, fire hydrant. Take care to maintain access for delivery of supplies, entry and egress of visitors and employees.

.3 Noise, dust, dirt, water, fumes or other objectionable, hazardous, or disruptive conditions.

.4 Interruption of heating, air conditioning, and ventilation systems.

.5 Interruption of internal systems such as gas supplies, communications, fire sprinklers, fire alarms.

1.6 PROJECT CONDITIONS:

1.6.1 Occupancy: The Owner will be continuously occupying buildings adjacent to areas of demolition operations. Conduct demolition operations in a manner that will minimize need for disruption of Owner's normal operations. Provide minimum of 3 working days advance notice to Owner of demolition activities which will severely impact Owner's operations.

1.6.2 Condition of Structure: The information indicated represents only the opinion of the Owner as to the character of the materials to be encountered and their locations. The Owner assumes no responsibility whatsoever in respect to the sufficiency or accuracy of the Drawings or the interpretation thereof, and there is no warranty or guarantee, either expressed or implied, that the conditions and locations indicated are representative of those existing throughout the existing structures or that unforeseen developments may not occur.

1.6.3 Disconnection of Services: Notify Owner and authorities owning or controlling wires, conduits, pipes, and other services affected by demolition or remodeling a minimum of 3 working days or as required by company, utility, or local authority having jurisdiction before commencing operations.

.1 Disconnect and cap pipes and services as required by company, utility, or local authority having jurisdiction, and as required for demolition Work.

PART 2 - PRODUCTS (Not Applicable)

PART 3 - EXECUTION

3.1 EXAMINATION:

3.1.1 The drawings show general information only. Examine the site to determine the exact existing conditions and character and extent of the Work to be performed and operations required.

3.1.2 Verify that spaces to remain unaltered adjacent to areas of demolition, alteration, or cutting are completely secured and rendered dustproof before beginning such work.

3.2 PREPARATION:

3.2.1 Provide barricades, and maintenance and supervision thereof, in accordance with applicable Federal, State and local Codes and their respective requirements, or as may be directed from time to time. Install temporary barricades, enclosures and protections before demolition work is started.

3.2.2 Protection from Weather: Protect the interior of the existing building from damage by weather at all times during demolition and remodeling operations.

3.3 GENERAL DEMOLITION REQUIREMENTS:

3.3.1 Remove existing work and items which are required to be removed in such manner that minimum damage and disturbance is caused to adjacent and connection work scheduled to remain. Repair or replace, at the discretion of the Architect, existing work scheduled to remain which is damaged by these operations.

3.3.2 Include preparation of existing areas to receive new materials and removal of materials and equipment to alter or repair the existing building as indicated and as specified.

3.3.3 Perform demolition exercising proper care to prevent injury to the public, workmen and adjoining property.

3.3.4 Perform the removal, cutting, drilling of existing work with extreme care, and use small tools in order not to jeopardize the structural integrity of the building.

3.3.5 Rebuild existing work which has to be removed to allow the installation of new work as required by the Architect.

3.3.6 Remove, protect and reinstall existing items as indicated. Replace materials scheduled for reuse which are damaged by the Contractor to the extent that they cannot be reused, with equal quality material.

3.4 DEMOLITION RESTRICTIONS:

3.4.1 No blasting will be permitted.

3.4.2 Burning of rubbish at the site will not be permitted.

3.4.3 Do not operate air compressors inside of existing buildings.

3.4.4 Drilling or cutting of columns, beams, joists, girders, or other structural supporting elements will not be permitted, unless specifically approved by the Architect.

3.4.5 Cover openings temporarily when not in use and patch as soon as work is installed.

3.5 REMOVED AND SALVAGED ITEMS:

3.5.1 Clean salvaged items.

3.5.2 Pack or crate items after cleaning, identify contents of containers.

3.5.3 Store items in a secure area until delivery to Owner.

3.5.4 Transport items to Owner's storage area {on-site} {off-site} {designated by Owner} {indicated on Drawings}.

3.5.5 Protect items from damage during transport and storage.

3.6 REMOVED AND REINSTALLED ITEMS: Comply with the following:

3.6.1 Clean and repair items to functional condition adequate for intended reuse. Paint equipment to match new equipment.

3.6.2 Pack or crate items after cleaning and repairing. Identify contents of containers.

3.6.3 Protect items from damage during transport and storage.

3.6.4 Reinstall items in location indicated. Comply with installation requirements for new materials and equipment. Provide connections, supports, and miscellaneous materials necessary to make item functional for use indicated.

3.7 EXISTING ITEMS TO REMAIN:

3.7.1 Protection construction indicated to remain against damage and soiling during selective demolition. When permitted by Architect, items may be removed to a suitable, protected storage location during selective demolition {and cleaned} and reinstalled in their original locations after selective demolition operations are complete.

3.8 SPECIFIC DEMOLITION REQUIREMENTS:

3.8.1 Asphalt Pavement: Remove existing asphalt paving as indicated. Break up and transport asphalt to asphalt recycling facility unless otherwise directed by Architect.

3.8.2 Concrete and Masonry: Demolish concrete and masonry in small sections. Cut concrete and masonry at junctures with construction to remain using power-driven masonry saw or hand tools; do not use power-driven impact tools. Saw concrete along straight lines to a depth of not less than 1-1/2 inches. Make each cut in walls perpendicular to the face and in alignment with the cut in the opposite face. Break out the remainder of the concrete or masonry provided that the broken area is concealed in the finished work, and the remaining concrete or masonry is sound. At locations where the broken face cannot be concealed, grind smooth or saw cut entirely through the concrete or masonry.

3.8.3 Anchorages: Remove anchorages to at least 1/2-inch below the surface of concrete or masonry and patch depressions to provide a flush surface. Where surface will be concealed in the finished work, anchors may be cut flush with the surface.

3.8.4 Remove existing drywell and drainage pipe as indicated on Drawings.

3.8.5 Remove and relocate existing fence per Drawings.

3.8.6 Remove and relocate existing concrete bench as indicated on Landscape Drawings.

3.8.7 Remove and relocate rock/cobble, store on-site and re-use per Landscape Drawings.

3.8.8 Remove existing playground equipment and store/dispose of per City of Rancho Mirage Direction and Approval.

3.8.9 Remove and relocate existing CVWD Ballard per Drawings.

3.8.10 Remove and relocate existing BBQ per Landscape Drawings.

3.8.11 Remove existing trash enclosure, concrete and walls per Drawings.

3.8.12 Remove and relocate existing sign as indicated on Drawings, per City of Rancho Mirage Direction and Approval.

3.8.13 Remove and relocate existing irrigation lines and valves per Landscape Drawings.

3.8.14 Landscaping, Trees, and Associated Roots, Irrigation System: Remove and dispose of existing landscaping, trees, and associated roots as indicated on Drawings. Save any trees to be re-used as indicated. Remove and cap existing irrigation system as indicated.

.1 There are a number of trees that the City is tagging and paying for outside of the Contract. The Contractor will be responsible for delivery and installation as well as the guarantee. The tagged material is noted on the Drawings, and notes on Drawings address required information.

3.8.15 Contractor to provide a rough grade for the shade company to come in and pour the foundations for the shade. Coordinate with Shade Company, as they will need to coordinate with rough grading.

3.9 SALVAGED MATERIALS AND ITEMS:

3.9.1 Do not reuse in this project, materials and items removed from existing site or buildings, except with specific written approval by the Architect in each case, unless such removed material or item is specifically indicated or specified to be reused.

3.9.2 Remove materials and equipment indicated to be salvaged for reinstallation and store to prevent damage, and reinstall as the work progresses. Do not reuse in this project, other materials and equipment removed from existing site or building, except with specific written approval by the Architect in each case.

3.9.3 Historic artifacts, including cornerstones and their contents, commemorative plaques and tablets, antiques, and other articles of historic significance remain the property of the Owner. Notify Owner if such items are encountered and obtain acceptance regarding method of removal and salvage from Owner.

3.9.4 Dismantled materials and items to be reused shall be in good condition without objectionable cracks, chips, splits, checks, dents, scratches, or other defects. Operating items shall operate properly.

3.10 ALTERATIONS, PATCHING AND REPAIRS:

3.10.1 Patch areas requiring patching, including damage caused by removing, relocating, or adding fixtures and equipment, damages caused by demolition at adjacent materials.

3.10.2 Existing permanent walls which remain shall have smooth regular surfaces with no visible marks from previous abutting construction.

3.11 DISPOSAL OF DEMOLISHED MATERIALS:

3.11.1 Do not stockpile debris in the existing building, without the approval of the Architect. Remove debris as it accumulates from removal operations to a legal disposal area.

3.11.2 If hazardous materials are encountered during demolition operations, comply with applicable regulations, laws, and ordinances concerning removal, handling and protection against exposure or environmental pollution.

3.12 NOISE ABATEMENT AND DUST POLLUTION:

3.12.1 Noise Abatement: Limit noise to a reasonable level as related to specific items of equipment used and their hours of use. This does not preclude use of mechanical equipment, i.e. jack hammers, powder-driven fasteners.

3.12.2 Dust Pollution: During demolition take precautions to moderate the intensity of blowing dust and dirt.

END OF SECTION

34-003 – 03/06/2014

SECTION 02230

SITE CLEARING

PART 1 - GENERAL

1.1 SUMMARY:

1.1.1 Section Includes: Site clearing.

1.1.2 Related Documents: The Conditions of the Contract and Division 1 apply to this section as fully as if repeated herein.

1.2 PERFORMANCE REQUIREMENTS:

1.2.1 Clear the construction site of existing obstructions such as structures, walls, concrete, paving, utilities, planting, grass, other materials, where indicated or as necessary to prepare the site for construction.

1.2.2 Arrange and complete clearing and site preparation work required for the start of construction before the start of earthwork. Erect temporary barricades, enclosures and protections of adjacent property and existing work before site clearing is started.

1.3 REGULATORY REQUIREMENTS:

1.3.1 Standard Specifications for Public Works Construction, Latest Edition including County of Riverside, "Regional Supplement Amendments", and City of Rancho Mirage " Supplement Amendments".

1.3.2 City of Rancho Mirage Standard Special Provisions.

1.4 PROJECT CONDITIONS:

1.4.1 The drawings show general information only. Examine the site to determine the exact existing conditions and character and extent of the construction activities to be performed and clearing operations required.

.1 The failure or omission to visit the site and become acquainted with the existing conditions shall not be considered as relief from obligations with respect to contract.

1.4.2 Traffic: Conduct site clearing operations to ensure minimum interference with roads, streets, walks, other adjacent occupied or used facilities. Do not close or obstruct streets, walks or other occupied or used facilities without permission from authorities having jurisdiction.

1.4.3 Existing Utilities:

.1 Existing underground and overhead lines indicated are shown from best possible information available. Verify location before start of site clearing operations.

.2 It shall be understood and agreed that certain lines cannot be or have not been located and no indication is contained on the Drawings or referred to in the Specifications (i.e. storm drainage, electrical, plumbing, sewer, water or gas); therefore, exercise extreme caution during clearing, grading, excavating, trenching, and similar construction activities. Should such lines be encountered, give notice, in writing, and do not proceed until adequate investigation has been made, the line identified, and instructions issued as to how to proceed.

1.4.4 Barricades and Work Areas: Provide barricades, warnings (signs and lighting), and maintenance and supervision thereof, in accordance with applicable Federal, State and local Codes and their respective requirements, or as may be directed from time to time. Do not commence site clearing until barricades and warnings are in place.

1.4.5 Protection of Existing Trees and Vegetation: Protect existing trees and other vegetation indicated to remain against unnecessary cutting, breaking or skinning of roots, skinning and bruising of bark, smothering of trees by stockpiling construction materials or excavated materials within drip line. Provide temporary guards to protect trees and vegetation to remain.

PART 2 - PRODUCTS (Not Applicable)

PART 3 - EXECUTION

3.1 EXAMINATION:

Examine and review the site and determine existing conditions which affect construction operations.

3.2 PROTECTION:

3.2.1 Protect existing appurtenances and improvements, which are to remain. Repair or replace damaged facilities promptly.

3.2.2 Provide and maintain bracing and shoring as required by applicable regulations for safety.

3.2.3 Protection of Utilities: Preserve in operating condition, active utilities traversing or within and about the site; protect property and items, including but not limited to piping, conduits, drains, manholes, mains, laterals, catch basins, valve boxes, meters, and other appurtenances and structures. Promptly repair damage to such utility or work due to construction activities, to the satisfaction of the owning utility or municipal bodies having jurisdiction.

3.2.4 No blasting or on site burning will be permitted.

3.3 SITE CLEARING:

3.3.1 Equipment: The use of proper equipment is the responsibility of the Contractor.

3.3.2 Disposition of Materials:

.1 Removed material is the property of the Contractor. Promptly remove to a legal disposal area.

.2 Stockpiling of removed materials on the project site will not be permitted without written approval from the Architect. Material suitable for topsoil may be stockpiled on site at a location to be approved by the Architect.

3.3.3 Clear the site of all obstructions including trees, shrubs and miscellaneous debris that may be present. After clearing, strip the ground surface of surface vegetation. Dispose of materials from the clearing and stripping operations off-site to a legal disposal area.

3.3.4 Remove from the project site, existing structures, concrete, paving, walks, curbs and similar items indicated to be removed. The extent of the boundaries of such existing work removal shall be as indicated and as required to accomplish the contract work.

3.3.5 Remove subsurface obstructions which interfere with the new subsurface construction activities. The drawings indicate the approximate location of known existing sub-subsurface utilities, piping, other subsurface conditions. If existing subsurface obstructions are discovered or encountered which are not indicated, suspend the site preparation work at such locations and notify the Architect immediately and obtain instructions from him before proceeding.

3.3.6 Remove existing materials and items which are required to be removed, in such manner that minimum damage and disturbance is caused to adjacent and connecting construction. Repair or replace existing construction which is damaged by these operations.

3.3.7 Existing utility lines, either above ground or subsurface, such as gas, water, electric, sewer, telephone, yard sprinklers, other existing utilities, that are to be removed or relocated are indicated. Before their removal, complete required new rerouting as well as required temporary connections and make operative so that their functions to other existing structures served by them can be continuous and uninterrupted. Cut off existing construction which is to be removed from their connections beyond this project site before excavation is started.

3.4 NOISE ABATEMENT AND DUST PALLIATION:

3.4.1 Noise Abatement: Limit noise to a reasonable level as related to specific items of equipment used and their hours of use. This does not preclude use of mechanical equipment, i.e. jack hammers, powder-driven fasteners, and similar

equipment. Provide noise abatement control meeting the requirements of local noise abatement authority.

3.4.2 Dust Palliation: During demolition and site clearing, keep dust, dirt and pollen from vegetation from blowing or spreading by means of watering down at regular intervals and as directed.

3.4.3 Air Pollution Controls: Meet the requirements of Section 11017 of the Government Code and to the requirements of the South Coast Air Quality Management District.

END OF SECTION

01/28/2014

SECTION 02300

EARTHWORK

PART 1 - GENERAL

1.1 SUMMARY:

1.1.1 Section Includes: Rough grading, excavating, filling, compacting, backfilling, and finish grading work for structures, utilities and pavements.

1.1.2 Related Documents: The Conditions of the Contract and Division 1 apply to this section as fully as if repeated herein.

1.2 REFERENCES:

The editions of American Society for Testing and Materials (ASTM) standards and specifications referenced herein, apply to the work only to the extent specified by the reference.

1.3 DEFINITIONS:

1.3.1 Fill: Fill materials placed to raise the natural grade of the site or to backfill excavation.

1.3.2 On-Site Material: Soil material which is obtained from the required excavation on the site.

1.3.3 Imported Material: Soil material which is imported in from off-site areas.

1.3.4 Select Fill Material: On-site or imported material which is approved for use within 5 feet of final building pad grades, in structural backfill, behind retaining walls, or in the upper 24 inches of pavement subgrades.

1.3.5 General Fill Material: On-site or imported material upon which the Geotechnical Engineer has made sufficient tests and observations to enable him to issue a written statement that in his opinion the fill has been placed and compacted in accordance with the specification requirements.

1.3.6 Relative Density: The ratio, expressed as a percentage, of the dry density of the fill material as compacted in the field to the maximum dry density of the same material as determined by ASTM D 1557.

1.4 REGULATORY REQUIREMENTS:

Except as specified or indicated otherwise, earthwork shall conform to the 2010 California Building Code (CBC) Title 24 Part 2, Chapter 18A, "Foundations and Retaining Walls", and Chapter 33, "Site Work, Demolition and Construction".

1.5 PROJECT CONDITIONS:

1.5.1 Geotechnical Investigation Reports: A Geotechnical Report has been prepared for this Project for the Owner and is on file at the Office of the Landscape Architect, and Engineering Office at the City..

.1 The information is not intended as representations or warranties of the continuity of such conditions between soil bearings. The Owner will not be responsible for interpretations or conclusions drawn therefrom. The data are made available for the convenience of the Contractor.

.2 Additional test borings and other exploratory operations may be made by Contractor at no cost to the Owner.

1.5.2 Existing Utilities: Locate existing underground utilities in areas of work. If utilities are to remain in place, provide support and protection during earthwork operations.

.1 Should uncharted, or incorrectly charted, piping or other utilities be encountered during excavation, consult the Architect and utility owner immediately for directions. Cooperate with Owner and utility companies in keeping respective services and facilities in operation. Repair damaged utilities to satisfaction of utility owner.

.2 Do not interrupt existing utilities serving occupied facilities, except when permitted in writing by the Architect, and then only after acceptable temporary utility services have been provided. Provide minimum of 2 working days notice to the Architect, and receive written notice to proceed before interrupting any utility.

.3 Demolish and completely remove from the site existing underground utilities indicated to be removed. Coordinate with utility companies for shut-off of services if lines are active.

1.5.3 Protection of Persons and Property: Barricade open excavations and post with warning lights. Protect structures, utilities, sidewalks, pavements, other facilities from damage caused by settlement, lateral movement, undermining, washout and other hazards.

PART 2 - PRODUCTS

2.1 SOIL MATERIALS:

2.1.1 General Fill Material: Material imported or excavated from the cut areas that, in the opinion of the Geotechnical Engineer, is suitable for use in compaction to the specified densities. Do not use material of a perishable, spongy, or otherwise improper nature.

.1 The material shall contain no rocks or hard lumps greater than Soils Report indicates in inches in size and shall contain at least 40 percent of material smaller than 1/4 inch in size.

.2 Expansion Index: Material with expansion index greater than 20, as determined in accordance with ASTM D 4829, shall not be used within 2 feet of finished grade. On-Site material having and expansion index between 20 and 50 may be used, provided it is thoroughly mixed with on-site or imported granular material so as to reduce the expansion index to 20 or less.

2.1.2 Select Fill Materials: Material imported or excavated from the cut areas that, in the opinion of the Geotechnical Engineer, is suitable for use in constructing fills to attain required bearing strength and minimize settlement under load.

.1 Gradation: Material shall contain no rocks or hard lumps greater than size indicated on Soils Report in inches in size nor more than 35 percent, by weight of material finer than No. 200 sieve size when tested in accordance with ASTM D 1140.

.2 Expansion Index: Not greater than indicated on Soils Report when tested in accordance with ASTM D 4829.

.3 Plasticity Index: Not greater than indicated on Soils Report when tested in accordance with ASTM D 4318.

.4 Liquid Limit: Not to exceed that indicated on Soils Report when tested in accordance with ASTM D 4318.

2.1.3 Test representative samples of material to be used for fill in the laboratory in order to determine the expansion index, maximum density, optimum moisture content and classification of the soil.

2.1.4 During grading operations, soil types other than those analyzed in the report of the soil investigation may be encountered. Consult the Geotechnical Engineer to determine the suitability of these soils.

2.2 MISCELLANEOUS MATERIALS:

2.2.1 Provide a capillary water barrier under concrete floor slabs consisting of clean crushed stone, crushed gravel, or uncrushed gravel conforming to ASTM C 33 coarse aggregate grading size 57 or 67.

2.2.2 Vapor Barrier Under Floor Slabs On Ground: As indicated on Soils Report, the mil thickness of polyethylene meeting the requirements of ASTM D 2103.

2.2.3 Sand Under Floor Slabs On Ground: Fine, clean, fresh water sand, uniformly graded between 100 percent passing a No. 8 sieve and not more than 2 percent passing a No. 100 sieve.

PART 3 - EXECUTION

3.1 STAKING AND GRADES:

3.1.1 Verify the location and existence of bench marks, survey corners and monuments. Take special care to protect bench marks, survey corners and monuments. Should any become displaced, covered or destroyed, employ a Civil Engineer or Surveyor registered in the State of California to reset those points. Permanently reset corners at grade or a maximum of 3 inches below grade.

3.1.2 Before beginning work, place grade stakes not more than 50 feet apart along the tops and bottoms of slopes, and sufficient control in the area of work to establish grades to which the ground surfaces are to be brought. This work shall be done by a Civil Engineer or a Surveyor registered in the State of California, employed by the Contractor.

3.2 SHORING AND BRACING:

3.2.1 Provide shoring, bracing, and sheeting in trenches to provide worker safety in accordance with CAL-OSHA requirements and as required to protect adjacent utility lines and footings. Where permitted by CAL-OSHA, banks may be sloped except where trenches are near existing footings or utilities.

3.3 PREPARATION:

3.3.1 Where structures or pavement are indicated to be placed on existing grade or on cut areas, scarify such areas to a depth of 6 inches, moisture condition, and compact to the requirements for structural fill.

3.3.2 Step or bench the original ground when the slope of the natural receiving the fill exceeds 20 percent (5 horizontal units to one vertical unit). Cut benches to a firm compact soil condition. The lower bench shall be at least 15 feet wide and all other benches at least 6 feet wide. Compact the horizontal portion of each bench before receiving fill as specified herein for natural ground. Bench ground slopes flatter than 20 percent when considered necessary by the Geotechnical Engineer.

3.4 EXCAVATION:

3.4.1 Excavate for foundations, pits, trenches, footings, floor slabs, concrete walks, curbs, paving, and utilities to the lines and levels required, indicated, and specified herein.

3.4.2 Excavated earth material which is suitable for general and select fill material, as determined by the Geotechnical Engineer, shall be conditioned for re-use and stockpiled for later filling and backfilling operations. Condition by spreading in layers not to exceed 8 inches. Remove and dispose of off site all rocks and boulders exceeding 6 inches in the largest dimension, and deleterious material.

3.4.3 Excavation for Structures: Conform to elevations and dimensions indicated within a tolerance of plus or minus 0.10 feet, and extending a sufficient distance from footings and foundations to permit placing and removal of concrete formwork, installation of services, other construction, and for inspection.

.1 In excavating for footings and foundations, take care not to disturb bottom of excavation. Excavate by hand to final grade.

.2 Unauthorized Excavation: Should excavations for footings, through error, be excavated to a greater depth than indicated or directed, fill such additional depth with "lean-mix" concrete. Elsewhere, backfill and compact unauthorized excavations as specified for authorized excavations.

3.4.4 Excavation for Pavements: Cut surface under pavements to comply with cross-sections, elevations and grades indicated.

3.4.5 Excavation for Trenches: Dig trenches to the uniform width required for particular item to be installed, sufficiently wide to provide ample working room. The bottoms of trenches shall be level, tamped firm, clean and free from debris or foreign matter.

.1 Grade bottoms of trenches as indicated, notching under pipe bells to provide solid bearing for entire body of pipe.

.2 Do not backfill trenches until tests and inspections have been made and backfilling authorized by the Architect. Use care in backfilling to avoid damage or displacement of pipe systems.

.3 Remove abandoned sewers, piping, and other utilities encountered in the progress of the excavation and plug the ends in an approved manner.

3.4.6 Dewatering: Prevent surface water and subsurface or ground water from flowing into excavations and from flooding Project site and surrounding area.

3.5 BACKFILL AND FILL:

3.5.1 Preparing Areas to be Filled:

.1 Remove objectionable material from the surface upon which the fill is to be placed and remove or compact loose and porous soils to the depths specified. Plow or scarify the surface to depths specified.

.2 After the foundation for the fill has been cleared, plowed or scarified, disc or blade until it is uniform and free from clods, bring to the proper moisture content and compact as specified for fill.

3.5.2 Placing, Spreading, and Compacting Fill and Backfill Material:

.1 Place the fill material in layers that when compacted do not exceed the recommended inches, as indicated on Soils Report.. Spread each layer evenly and thoroughly mix during the spreading to obtain uniformity of material in each layer.

.2 Place backfill in inch layers, as indicated on Soils Report, level and tamp in place. Jetting will not be permitted; excessive puddling will not be permitted. Compact all layers as specified herein. Use select material as specified for structural fill.

.3 Place backfill material in lift thicknesses appropriate to the type of compaction equipment utilized and compact to a minimum relative density of 90 percent.

.4 Aerate the fill material when the moisture content is above that specified by the Geotechnical Engineer, by blading, mixing or other satisfactory methods until the moisture content is as specified.

.5 Add water to the fill material when the moisture content is below that specified by the Geotechnical Engineer, until the moisture content is as specified.

.6 Thoroughly compact each layer to the specified relative density after it has been placed, mixed and evenly spread. Accomplish compaction by sheepsfoot rollers, vibratory roller, multiple-wheel pneumatic-tired rollers or other types of acceptable compacting equipment. Use equipment of design that will compact the fill to the specified density. Compact in a continuous operation over the entire area and make sufficient passes with the equipment to insure that the desired density has been obtained throughout the entire fill.

.7 Reshape the surface as indicated after the subgrade for the slabs on ground has been compacted and trenches backfilled, and before placement of under floor granular base. Eliminate high or low spots. Thoroughly compact the finish subgrade by rolling, vibrating and tamping to a uniform dense surface. Protect the subgrade from displacement.

3.6 COMPACTION:

3.6.1 General: Unless otherwise specified, compact fill material while at a moisture content within 2 percent above and 2 percent below optimum moisture content and to a density that is not less than the percentages of maximum density specified below.

3.6.2 Relative compaction shall be as follows:

.1 Under concrete footings and floor slab: 90 percent.

.2 Under concrete and asphalt paving: 95 percent for the upper 12 inches immediately below the base course materials and 90 percent below.

.3 Backfill adjacent to foundations and retaining walls: 90 percent.

.4 All other areas: 85 percent.

3.7 GRANULAR FILL, VAPOR BARRIER AND SAND CUSHION:

3.7.1 Place granular fill on compacted subgrade. Compact granular fill in lifts of 4 inches with a minimum of two passes of a hand-operated plate type vibratory compactor per lift.

3.7.2 Apply vapor barrier with minimum 4 inch wide side and end laps sealed with adhesive tape. Turn vapor barrier up not less than 4 inches at perimeter walls and 6 inches at pipe, conduit, and duct and other penetrations and tape edges to the wall or penetrating member.

3.7.3 Spread a 2 inch thick layer of sand over the vapor barrier.

3.8 GRADING:

3.8.1 General: Fine grade to bring areas to required lines and grades. The subgrade elevation within the building area for slabs on grade (without a base course) shall be level within ½ inch along a 10 foot straight edge.

3.8.2 Slope finish grades to drain surface water away from buildings, walks, paving, and other structures. Generally, grade with uniform slope between points where elevations are given, or between such points and existing grades. Finish surfaces free from irregular surface changes, and as follows:

.1 Lawn or Unpaved Areas: Finish areas to receive topsoil to within not more than 0.10 foot above or below required subgrade elevations.

.2 Walks: Shape surface of areas under walks to line, grade and cross-section, with finish surface not more than 0.10 foot above or below required subgrade elevation.

.3 Pavements: Shape surface of areas under pavement to line, grade and cross-section, with finish surface not more than ½ inch above or below required subgrade elevation.

3.9 PROTECTION:

3.9.1 During construction properly grade excavated surfaces to provide positive drainage and prevent ponding of water. Do not permit water to accumulate in excavations. Control surface water to avoid damage to adjoining properties, or to finished work on the site. Take remedial measures to prevent erosion of freshly graded areas and slopes, until such time as permanent drainage and erosion control measures have been installed.

.1 Repair and re-establish grades in settled, eroded, and rutted areas to specified tolerances.

3.9.2 Reconditioning Compacted Areas: Where completed compacted areas are disturbed by subsequent construction operations or adverse weather, scarify surface, re-shape, and compact to required density before further construction.

3.9.3 After completion of grading and the Geotechnical Engineer has finished his observations of the work, no further excavation or filling shall be done except under the observation of the Geotechnical Engineer.

3.10 FIELD QUALITY CONTROL:

Field testing and inspection for earthwork is specified in Division 1.

3.11 CLEANING:

Disposal of Excess and Waste Materials: Leave entire graded portions of the site "rake-clean". Pick up and transport unsuitable, deleterious excess material, and debris to an off-site legal disposal area.

END OF SECTION

02/21/2014

SECTION 02310

GRADING

PART 1 - GENERAL

1.1 SUMMARY:

1.1.1 Section Includes: Site grading.

1.1.2 Related Documents: The Conditions of the Contract and Division 1 apply to this section as fully as if repeated herein.

1.1.3 Related Sections:

.1 Testing and Inspection: Specified in Division 1.

.2 Site Clearing: Specified in Section 02230.

.3 Excavation and Fill for Structures: Specified in Section 02315.

.4 Excavation and Fill for Utilities: Specified in Section 02316.

1.2 DEFINITIONS:

1.2.1 Fill: Fill materials placed to raise the natural grade of the site.

1.2.2 On-Site Material: Soil material which is obtained from the required excavations on the site.

1.2.3 Imported Material: Soil material which is imported to the project site from off-site areas.

1.2.4 Select Material: On-site or imported material which is approved for use as structural fill by the Owner's Geotechnical Engineer.

1.2.5 Structural Fill: Fill upon which the Owner's Geotechnical Engineer has made sufficient tests and observations to enable him to issue a written statement that in his opinion the fill has been placed and compacted in accordance with the specification requirements.

1.2.6 Degree of Compaction: The ratio, expressed as a percentage, of the dry density of the fill material as compacted in the field to the maximum dry density of the same material as determined by ASTM D 1557, as applicable.

1.3 REGULATORY REQUIREMENTS:

The 2010 California Building Code (CBC) Title 24 Part 2, Chapter 33 - Site Work, Demolition and Construction, except as modified herein.

1.4 PROJECT CONDITIONS:

1.4.1 Soils Report and Geotechnical Engineer: A Soils Investigation Report has been prepared for this project for the Owner and is on file at the Office of the Landscape Architect. The information is not intended as representations or warranties of the continuity of such conditions between soil bearings. The Owner will not be responsible for interpretations or conclusions drawn therefrom. The data are made available for the convenience of the Contractor.

1.4.2 Additional test borings and other exploratory operations may be made by Contractor at no cost to the Owner.

1.4.3 The existing soils, as specified herein, on the site may be reused for compacted fill as directed in the soils report and as approved and directed by the Architect and Geotechnical Engineer.

PART 2 - PRODUCTS

2.1 FILL MATERIALS:

2.1.1 Select Fill Material: Provide materials for compacted fill consisting of material imported or excavated from the project site cut areas that, in the opinion of the Geotechnical Engineer, is suitable for use in constructing fills. Use material which does not contain rocks or hard lumps greater than 6 inches in size and which contains at least 40 percent of material smaller than 1/4 inch in size. Do not use material of a perishable, spongy, or otherwise improper nature for fill.

2.1.2 Fine Grading Fill Material: Select fine material containing no rocks or clods over 2 inches in diameter which, in the opinion of the Geotechnical Engineer, is suitable for fill material. Stockpile such material which may be encountered on site, or use, or supplement with approved borrow material for fine grading work.

2.1.3 Select Material Placed Within 3 Feet of Rough Grade: Use material which contains no rocks or hard lumps greater than 6 inches in size and that swells less than 3 percent when compacted as specified herein for compacted fill and when subjected to an axial pressure of 160 psf.

2.1.4 Playground Sand: Clean washed plaster sand conforming to ASTM C 33, except gradation shall be as follows:

Passing No. 20 sieve	100%
Passing No. 200 sieve	3%

2.1.5 Samples: Submit representative samples of material to be used for fill for testing in the laboratory by the Owner's Geotechnical Engineer in order to determine the maximum density, optimum moisture content and classification of the soil. In addition, the Geotechnical Engineer will determine the approximate bearing value of a

recompacted, saturated sample by direct shear tests or other tests applicable to the particular soil.

2.1.6 During grading operations, soil types other than those analyzed in the report of the soil investigation may be encountered. Consult with the Geotechnical Engineer to determine the suitability of these soils.

PART 3 - EXECUTION

3.1 PREPARATION OF WORK:

3.1.1 Verify the location and existence of bench marks, survey corners and monuments. Take special care to protect bench marks, survey corners and monuments. Should any become displaced, covered or destroyed, employ a Civil Engineer or Surveyor registered in the State of California to reset those points. Permanently reset corners at grade or a maximum of 3 inches below grade.

3.1.2 Before beginning work, place grade stakes not more than 50 feet apart along the tops and bottoms of slopes to provide sufficient control in the area of work to establish grades to which the ground surfaces are to be brought. Employ a civil engineer or a surveyor registered in the State of California, to accomplish this work.

3.1.3 Remove rubble, debris, vegetation, roots, weeds, and perishable material from the site.

3.1.4 Prepare the surface of areas to receive fill free from ruts, hummocks or other uneven features which would tend to prevent uniform compaction by the equipment used.

3.1.5 The expansive characteristics of some of the topsoils will require special consideration. Remove expansive topsoils wherever they exist within 3 feet of finish grade in the building pad area and replace with non-expansive soil. Further, wherever the expansive clay topsoils are used for fill, place a minimum of 3 feet below proposed finish grade. The building area is defined as the area within and for a minimum distance of 5 feet horizontally beyond the building perimeter footings.

3.1.6 Step or bench the original ground when the slope of the natural ground receiving fill exceeds 17 percent (6 horizontal units to one vertical unit). Cut benches to a firm compact soil condition. Cut the lower bench at least 10 feet wide and all other benches at least 6 feet wide. Compact the horizontal portion of each bench before receiving fill as specified herein for compacted natural ground. Bench ground slopes flatter than 20 percent when considered necessary by the Architect.

3.1.7 Recompact all loose soils as specified herein.

3.2 EXCAVATION AND BACKFILL:

3.2.1 Excavate to the elevations and the form indicated with finish grades and slopes cut true and straight.

3.2.2 Use care in making cuts so that backfill will not be required in cut areas. Fill excavation taken to greater depth than required with approved material placed to a minimum relative compaction of 90 percent in layers not more than 6 inches deep, or extend the footings to the overexcavated elevation. The Architect will determine the proper correction method. Do not use material of a perishable, spongy, or otherwise improper nature.

3.2.3 Repair work due to over or careless excavation, including additional depth of foundations if required to penetrate backfill due to excessive cuts. Provide pumping or draining necessary to keep excavated areas free from standing water.

3.2.4 Remove rock encountered in excavating. Perform blasting, if necessary, in accordance with the provisions of the State and local codes and ordinances. Assume sole responsibility of this operation and hold the Owner and the Architect free of damages resulting therefrom.

3.2.5 Maximum allowable rock and clod size in the upper 6 inches of earth fill or cut subgrade:

.1 Under Building Slabs:

a. Subgrade with slab over: 2 inches

b. Subgrade with sand or rock base course over: 6 inches

.2 Under Concrete Flatwork (walks, drives, etc.):

a. Subgrade with flatwork over: 2 inches

b. Subgrade with 4 inch sand base course: 6 inches

.3 Under Asphaltic Paving:

a. Subgrade with paving over: 2 inches

b. Subgrade with 4 inches minimum aggregate base: 6 inches

.4 Under all other areas: 6 inches

3.2.6 Rocks over maximum allowable size (up to 12 inch greatest dimension) may be used in fills 3 feet or deeper below the subgrade as directed by the Architect, except in building pad areas.

3.3 COMPACTED FILLS:

3.3.1 Construct fills under the supervision of the Geotechnical Engineer.

3.3.2 Fill Materials: "Select Fill Material" as specified herein, or imported fill if required.

3.3.3 Place and compact fill material and base fill under slabs as herein specified in the filled areas and as indicated. Place the fill material in layers which when compacted does not exceed 6 inches thick. Compact each layer after it has been placed, mixed and spread evenly to a minimum relative compaction noted below as determined by the ASTM D 1557.

.1 Compact as follows:

Under buildings	90%
Under asphaltic concrete pavement (top 6 inch subgrade)	95%
Trenches	90%
On top 3 feet under buildings and paved areas	90%

3.3.4 When the moisture content of the fill material is below that specified by the Geotechnical Engineer, add water until the moisture content is as specified.

3.3.5 When the moisture content of the fill material is above that specified by the Geotechnical Engineer, aerate the fill material by blading, mixing, or other satisfactory method until the moisture content is as specified.

3.3.6 Compact each layer to the specified density after it has been placed, mixed and spread evenly. Perform compaction by sheepsfoot rollers, vibratory rollers, multiple-wheel pneumatic-tired rollers or other types of acceptable compacting equipment. Use equipment of such design that it will be able to compact the fill to the specified density. Perform compaction continuous over the entire area and make sufficient trips with the equipment to insure that the desired density has been obtained.

3.3.7 Compact surface of fill slopes so that the slopes are stable and there is no excessive loose soil on the slopes.

3.4 FINISH GRADING:

3.4.1 Finish upper 6 inches of cut and fill areas with the specified fine grading fill material, including earth banks; and excluding areas scheduled to receive base course materials for subsequent concrete slabs and flatwork or asphaltic concrete paving (however, grade these areas to the specified tolerances), and excluding lawn and turf areas.

3.4.2 Spread, moisten and compact the material to the required subgrade elevations, with a maximum deviation of 0.10 feet above or below a straight line forming a uniform slope between changes in grade. Compact the top 6 inches of subgrade in areas to receive asphaltic concrete paving to 95 percent.

3.4.3 Water compact areas scheduled for planting and not topsoil to provide a relatively firm grade with minimal settlement potential.

3.4.4 Finish subgrades shall allow for thickness and slopes of subsequent construction. Grade to provide uniform slope between elevation points or lines, or between such elevations and existing grades.

3.4.5 Carefully cut and trim existing and proposed cut and fill banks and leave within 6 inches of slope indicated. For banks to be planted, drag rather than blade, to avoid too smooth a surface. Remove and dispose of loose rock over 2 inches.

3.5 SPREADING OF ON-SITE TOPSOIL:

3.5.1 Before ripping of subgrade, spread gypsum over the area at the rate of 160 pounds per 1,000 square feet.

3.5.2 Rip and loosen soil in all planting areas, except on slopes exceeding 4:1 gradient, to a depth of 12 inches below subgrade then spread 4 inches of topsoil; disc, scarify and mix into existing soil. Remove debris, foreign matter and stones in excess of one inch in diameter. Drag smooth and water compact. Place remaining topsoil to finish grade, drag smooth and water compact.

3.5.3 After incorporation of 4 inches of topsoil and water compaction, spread an additional 4 inches of on-site topsoil evenly in all areas to be planted, except on slopes exceeding 4:1. After spreading, water compact.

3.5.4 Measure on-site topsoil for thickness when it is fully water compacted and in a settled condition.

3.6 PLAYGROUND SAND:

Place playground sand over compacted earth base to thickness indicated. Allow sand to settle and rake smooth and level.

3.7 PROTECTION OF WORK:

3.7.1 During construction, properly grade excavated surfaces to provide positive drainage and prevent ponding of water. Control surface water to avoid damage to adjoining properties or to finished work on the site. Take remedial measures to prevent erosion of freshly graded areas and until such time as permanent drainage and erosion control features have been installed.

3.7.2 After completion of grading and the Geotechnical Engineer has finished his observation of the work, do no further excavation or filling except under the observation of the Geotechnical Engineer.

3.8 RECORD (AS BUILT) DRAWINGS:

3.8.1 Maintain a set of prints and legibly record, in red ink, deviations from the contract drawings. In some cases, it may be necessary to use several prints of the same drawings in order to legibly record all "As-Built" data. Record and certify the

accuracy by a Surveyor or Civil Engineer registered in the State of California, the following data on the Record Drawings:

.1 Structures (located with respect to property lines or monumented corners).

.2 Location and elevation of concrete and asphaltic concrete paving, topsoil, earth, and decomposed granite.

.3 Location of fencing and gates.

.4 Top and bottom of banks (located with respect to property line, buildings or fencing).

.5 Finish grades at 50 foot intervals and at top and bottom of banks.

.6 Location and elevation of drain lines, including plugged tees and capped ends, catch basins and drainage structures, and flow line elevations at these points. No underground lines may be backfilled until elevations and dimensions are completely recorded on office prints and a check has been made of line by Architect.

.7 Location and elevations of gutters and walls.

3.8.2 Give dimensions from face of permanent buildings or other permanent installation, rather than temporary locations, which are subject to change.

3.8.3 Deliver the "Record (as-built) drawings" to the Architect before final inspection of the project in accordance with Division 1.

END OF SECTION

01/28/2014

SECTION 02315

EXCAVATING, BACKFILLING AND COMPACTING FOR STRUCTURES

PART 1 - GENERAL

1.1 SUMMARY:

1.1.1 Section Includes: Excavating, backfilling and compacting for structures.

1.1.2 Related Documents: The Conditions of the Contract and Division 1 apply to this section as fully as if repeated herein.

1.1.3 Related Sections:

.1 Testing and Inspection: Specified in Division 1.

.2 Site Grading: Specified in Section 02310.

.3 Trenching and Backfilling for Utilities: Specified in Section 02316.

1.2 DEFINITIONS:

1.2.1 Fill: Fill materials placed to backfill excavation.

1.2.2 On-Site Material: Soil material which is obtained from the required excavation on the site.

1.2.3 Imported Material: Soil material which is imported in from off-site areas.

1.2.4 Degree of Compaction: The ratio, expressed as a percentage, of the dry density of the fill material as compacted in the field to the maximum dry density of the same material as determined by ASTM D 1557, as applicable.

1.3 QUALITY ASSURANCE:

1.3.1 Regulatory Requirements: 2010 California Building Code (CBC), Chapter 33 - Site Work, Demolition and Construction, except as modified herein.

1.3.2 Full time observations may be made by the Owner's Geotechnical Engineer during the excavating, filling and compacting operations.

1.3.3 The Geotechnical Engineer will make field density tests in accordance with ASTM D 1556. When these tests indicate that the density of any layer of fill or portion thereof is below the specified density, rework the particular layer or portions until the specified density has been obtained.

1.3.4 Required inspection and testing will be paid for by the Owner as specified in Division 1.

PART 2 - PRODUCTS

2.1 SELECT MATERIALS:

2.1.1 Materials For Compacted Fill: Consist of material imported or excavated from the cut areas that, in the opinion of the Geotechnical Engineer, is suitable for use in compacted fills. Provide material which contains no rocks or hard lumps greater than 6 inches in size and which contains at least 40 percent of material smaller than 1/4 inch in size. Do not use material of a perishable, spongy, or otherwise improper nature.

2.1.2 Sand Under Floor Slabs On Ground: Fine, clean, fresh water sand, uniformly graded between 100 percent passing a No. 8 sieve and not more than 2 percent passing a No. 100 sieve.

2.2 FOUNDATION DRAINS:

2.2.1 Foundation Drain Pipe: Sizes as indicated, perforated corrugated plastic drainage tubing and accessories, meeting requirements of ASTM F 405 for Heavy Duty Tubing and National Sanitation Foundation Standards. Acceptable manufacturer or equal:

Advanced Drainage Systems, Inc.

2.2.2 Drainage Gravel: Clean crushed stone, crushed gravel, or uncrushed gravel, 100 percent passing a 1-1/2 inch sieve, 90-100 percent passing a 3/4 inch sieve and 0-5 percent passing a No. 4 sieve as determined in accordance with ASTM C 136.

2.2.3 Subsurface Drainage Mat: Manufacturer's standard three dimensional, non-biodegradable, plastic material designed to conduct water to foundation drainage system, with non-woven geotextile fabric of polypropylene or polyester fibers, or a combination thereof. Acceptable products or equal:

American Enka Co.; Enkadrain
Mirafi, Inc.; Miradrain

PART 3 - EXECUTION

3.1 EXCAVATING:

3.1.1 General: Excavate to lines, grades and elevations required. Allow space for formwork, waterproofing application, and similar construction requiring extra side excavation. Notify the Architect 2 working days in advance of completion of excavation, ready for form work.

3.1.2 Over Excavation:

.1 If excavations for foundations are made deeper than indicated, fill with same concrete as specified for foundations. If excavations for foundations are made wider than indicated, form the footings or fill with same concrete as specified for foundation work.

.2 If excavations for slabs or flatwork are made deeper than indicated, fill with coarse, fresh water sand to required levels. Compact at optimum moisture content to 90 percent density.

.3 If excavations to greater depths than indicated are required by the Architect in order to reach satisfactory soil bearing conditions, additional costs will be paid by the Owner, provided the costs are approved before the extra work being done.

3.1.3 Pumping and Draining: Keep excavations free of standing water; pump or drain as required.

3.1.4 Shoring: Provide and maintain such shoring or bracing as required to protect structures and excavations from caving or other earth movement.

3.2 FOUNDATION DRAIN SYSTEM:

3.2.1 Impervious Fill at Footings: Place impervious fill material on subgrade adjacent to bottom of footings, minimum 6 inches deep and 12 inches wide, unless otherwise indicated.

3.2.2 Filtering Material: Place a supporting layer of drainage material over compacted subgrade where drainage pipe is to be laid, to a compacted depth of not less than 4 inches, unless otherwise indicated.

3.2.3 Laying Drain Pipe: Lay foundation drains to uniform gradual pitch on firm bearing. Lay perforated pipe with holes down and joints tightly closed. Install drains with lowest point not any lower than bottom of footing, minimum pitch of 3 inches in 100 lineal feet, and highest point of drains not above top of wall footings, unless otherwise indicated.

3.2.4 Testing Drain Lines: Test or check lines before backfilling to assure free flow.

.1 Drain system will be connected to sumps under Division 15.

3.2.5 Subsurface Drainage Mat: Comply with manufacturer's instruction for securing matting to substrate. Use adhesives and mechanical fasteners. Lap edges of fabric and extend fabric around foundation drainage pipe. Protect matting during backfill operations.

3.2.6 Drainage Fill: Do not place until drains have been inspected and approved. Extend drainage fill from bottom of drains up for at least 3 feet. Width of drainage fill shall be minimum of 2 feet but shall fill width of excavated trench. Before placing fill, remove caved-in or loose earth. Pack material carefully so as to form dense fill without large voids or pockets. Over drainage fill, place one layer of drainage fabric or 15 pound

asphalt saturated felt, lapping edges at least 4 inches. Complete fill with normal backfill material.

3.3 BACKFILLING:

3.3.1 Requirement: Do no backfilling until approval is obtained for each specific location. Notify the Architect one working day in advance of the work.

3.3.2 Placing: Place material in layers not exceeding 6 inches in compacted thickness. Move equipment evenly over entire surface of each layer, so ruts or pockets are not formed. Obtain specified density before additional layers are placed. Compact material at optimum moisture content to a density of 90 percent.

3.3.3 Backfill Compaction: Unless otherwise specified, compact fill material while at a moisture content near the optimum moisture content and to a density that is not less than 90 percent of the maximum density determined in accordance with ASTM D 1557, or other density methods that will obtain equivalent results. Before compaction, moisten or aerate each layer as necessary to provide optimum moisture content.

3.4 FINISH GRADING:

3.4.1 General: Fine grade to bring areas to required lines and grades. The subgrade elevation within the building area for slabs on grade (without a base course) shall be within 0.50 inch along a 10 foot straight edge.

3.4.2 Slope finish grades to drain surface water away from buildings, walks, paving, and other structures. Generally, grade with uniform slope between points where elevations are given, or between such points and existing grades.

3.5 COMPLETION REQUIREMENTS:

3.5.1 Cleanup: Leave entire graded portions of the site "rake-clean".

3.5.2 Disposal: Pick up and transport unsuitable, deleterious excess material, and debris to an off-site legal disposal area.

END OF SECTION

01/28/20104

SECTION 02316

EXCAVATING, BACKFILLING AND COMPACTING FOR UTILITIES

PART 1 - GENERAL

1.1 SUMMARY:

1.1.1 Section Includes: Excavating, backfilling and compacting for utilities.

1.1.2 Related Documents: The Conditions of the Contract and Division 1 apply to this section as fully as if repeated herein.

1.2 RELATED WORK:

1.2.1 Testing and Inspection: Specified in Division 1.

1.2.2 Excavating and Backfilling for Structures: Specified in Section 02315.

1.2.3 Mechanical and Electrical: Specified in Divisions 15 and 16.

1.3 GOVERNING DOCUMENTS:

1.3.1 The 2010 California Building Code (CBC) Title 24 Part 2, Chapter 33 - Site Work, Demolition and Construction, except as modified herein.

1.3.2 City of Rancho Mirage Standard Drawings.

PART 2 - PRODUCTS

2.1 MATERIALS:

2.1.1 Select Bedding Sand: Class A screened fill sand with a maximum particle size of 1/2 inch, not exceeding 18 percent and free of expansive materials, debris and organic matter.

2.1.2 Select Backfill Material: Nonexpansive soil excavated from the utility trench or site cut areas, or from off-site borrow fill material, which in the opinion of the Geotechnical Engineer is suitable for backfilling. Provide material which contains no rocks or clods over 3 inches in diameter, is free of debris and organic matter, and a minimum of 40 percent of the material passes a No. 4 screen. Limit rock and clod size to 3 inches maximum diameter for backfilling trenches 12 inches or less in width.

PART 3 - EXECUTION

3.1 GENERAL:

3.1.1 Layout: Carefully layout the route of each underground utility before trenching. Review drawings and coordinate with underground construction by other trades to avoid conflicts.

3.1.2 Clearances: Take special notice and maintain the required horizontal and vertical depth clearances from structural footings for utility trenches running parallel to footings. Do not violate the area of the footing bearing prism. In the event of conflict (i.e., the utility cannot be relocated or its depth changed), proceed as directed by the Architect. Lower structural footings to maintain proper clearances for underground utilities trenching without additional cost to the Owner.

3.2 TRENCHING:

3.2.1 Excavate trenches for utilities (i.e., pipe, conduit, ducts, other utilities) to the required lines, grades and elevations indicated and as specified. Hand trim changes in direction and bottoms of trenches. Provide shoring in trenches over 5 feet deep and also in trenches where unstable soil conditions are encountered. Comply with OSHA requirements.

3.2.2 Pipe Trench Dimensions: The following requirements are considered minimal unless otherwise indicated, in order to provide adequate pipe clearances and bedding. Provide trenches wider than the specified minimums where required to properly install the particular type of piping. In the event utility company regulations, code requirements, or the pipe manufacturer's recommendations differ from these provisions, the most restrictive requirements shall take precedence:

.1 Pipe Burial Depths:

Sewer & Drainage:	24" + pipe O.D. + 3" bed
Gas:	30" + pipe O.D. + 4" bed
Water (Domestic)	
PVC:	30" + pipe O.D. + 4" bed
All other:	24" (30" at planters) + pipe O.D. + 4" bed
Water (Irrigation Pressure Piping)	
3" diameter or less:	18" + pipe O.D. + 2" bed
4" diameter or more:	Same as domestic water

Notes:
Finish grade to top of pipe, typical.
O.D.: Outside dimension.

.2 Trench Widths:

Sewer & Drainage:	12" + pipe O.D. for 4" to 18" diameter pipe
Gas:	8" + pipe O.D.
Water (Domestic):	8" + pipe O.D.
Water (Irrigation Pressure Piping):	
3" diameter or less:	4" + pipe O.D.
4" diameter or more:	8" + pipe O.D.

3.2.3 Common Trench Requirements:

.1 Do not install copper piping or metal gas piping in a common trench with other dissimilar metal piping or conduit; separate a minimum of 4 feet when running parallel to such piping or conduit.

.2 Separate multiple parallel lines of piping in a common trench a minimum of 12 inches, both horizontally and vertically, between individual pipes.

.3 Install domestic water piping, running parallel in a common trench with sewer or drainage lines, on a solid shelf 12 inches above the sewer or drainage piping.

.4 Do not run electrical power and communications conduit in a common trench with sewer, drainage, water or gas piping.

3.2.4 Additional provisions for underground piping within building areas: Refer to applicable specification sections under Division 15 and details as indicated.

3.2.5 Requirements for underground electrical and communications conduit, ducts: Refer to applicable specification sections under Division 16 and details as indicated.

3.3 BEDDING AND BACKFILLING:

3.3.1 Bedding: Lay and bed pipe in compacted select bedding sand, thickness as specified herein and backfill with the same material to a height of one foot above the top of pipe. Place in 6 inch layers and compact to a minimum relative density of 90 percent. Compact in a manner that will not displace or damage the pipe.

.1 Sewer and drain lines may be bedded in the native soil provided it is rock free and sandy. Dig out under bell portions of the piping for uniform bearing.

.2 Irrigation Piping: For requirements see Section 02810.

.3 Conduits, ducts, laid in a single layer, running parallel and in the same horizontal plane and not concrete encased, shall be "bedded" as specified herein. The select sand bedding for multi-layered banks of conduit not concrete encased, shall be water settled (not flooded) to completely fill the voids between the conduits with sand.

3.3.2 Backfilling: Backfill the remaining trench depth, including concrete encased utilities, with select backfill material at optimum moisture content, place in 6 to 8 inch

layers and compact to a minimum relative density of 90 percent. Attain compaction by any method (other than water jetting) that will obtain the minimum specified relative densities, without damaging the buried lines.

3.3.3 Install underground utility materials requiring special bedding and backfilling methods as recommended in conjunction with these materials or as indicated.

3.4 QUALITY CONTROL:

3.4.1 Do not backfill underground utility lines until:

.1 The "As-Built" elevations and dimensions are recorded on "Record Drawings" and verified.

.2 The utility lines have been inspected and satisfactorily tested.

3.4.2 Backfill compaction tests will be performed by the Owner's Geotechnical Engineer, in accordance with Section 01457, at locations and depths as directed. If the required minimum relative compaction density has not been obtained, excavate and rebackfill the deficient portion of the trench.

3.5 CLEANUP:

Pick up and transport unsuitable and deleterious material to an off-site legal disposal area. Place acceptable excess earth in on-site areas as compacted fill.

END OF SECTION

01/28/2014

SECTION 02362

TERMITE CONTROL

PART 1 - GENERAL

1.1 SUMMARY:

1.1.1 Section Includes: Termite control chemicals and treatment.

1.1.2 Related Documents: The Conditions of the Contract and Division 1 apply to this section as fully as if repeated herein.

1.2 SUBMITTALS:

1.2.1 Product Data: Treatments and application instructions, including EPA-Registered Label.

1.2.2 Product Certificates: Signed by manufacturers of termite control products certifying that treatments furnished comply with requirements.

1.2.3 Soil Treatment Application Report: After application of termiticide is completed, submit report for Owner's record information, including the following as applicable:

.1 Date and time of application.
.2 Moisture content of soil before application.
.3 Brand name and manufacturer of termiticide.
.4 Quantity of undiluted termiticide used.
.5 Dilutions, methods, volumes, and rates of application used.
.6 Areas of application.
.7 Water source for application.

1.2.4 Submittal procedures and quantities are specified in Division 1.

1.3 QUALITY ASSURANCE:

1.3.1 Applicator Qualifications: A pest control operator who is licensed according to regulations of authorities having jurisdiction to apply termite control treatment in jurisdiction where Project is located and who is experienced and has completed termite control treatment similar to that indicated for this Project and whose work has a record of successful in-service performance.

1.3.2 Regulatory Requirements: Formulate and apply termiticides, and label with a Federal registration number, to comply with Environmental Protection Agency (EPA) regulations and authorities having jurisdiction.

1.3.3 In addition to the requirements of these specifications, comply with manufacturer's instructions and recommendations for the work, including preparation of substrate and application.

1.4 PROJECT CONDITIONS:

1.4.1 Do not apply soil treatment solution until excavating, filling and grading operations are completed, except as otherwise required to coordinate with construction operations.

1.4.2 To insure penetration, do not apply soil treatment to frozen or excessively wet soils or during inclement weather. Comply with handling and application instructions of the soil toxicant manufacturer.

1.5 WARRANTY:

1.5.1 Upon completion of the termite control work, and as a condition of final acceptance, submit to the Owner a written guarantee providing:

.1 That the application was made at the concentration, rates and methods in compliance with this specification.

.2 That the effectiveness of the treatment is guaranteed for a term of 5 years.

.3 That evidence of subterranean termite activity or damage to the structure resulting from such activity within the guarantee period will be treated and repaired at no cost to the Owner.

PART 2 - PRODUCTS

2.1 MATERIALS:

2.1.1 Termiticide: Provide an EPA-registered termiticide complying with requirements of authorities having jurisdiction, in a soluble or emulsible, concentrated formulation that dilutes with water or foaming agent, and formulated to prevent termite infestation. Use only soil treatment solutions that are not harmful to plants. Provide quantity required for application at the label volume and rate for the maximum termiticide concentration allowed for each specific use, according to the product's EPA-Registered Label.

2.1.2 Manufacturers: Subject to compliance with requirements, provide products by one of the following (or equal):

AgrEvo Environmental Health, Inc.
American Cyanamid Co.; Agricultural Products Group
Bayer Corp.
DowElanco.
FMC Corp.; Pest Control Specialties.

Zeneca Professional Products.

2.1.3 Deliver the materials to the project site in the original sealed and labeled containers of the manufacturer.

PART 3 - EXECUTION

3.1 EXAMINATION:

Examine substrates, areas, and conditions, with applicator present, for compliance with requirements for moisture content of the soil, interfaces with earthwork, slab and foundation work, landscaping, and other conditions affecting performance of termite control. Proceed with application only after unsatisfactory conditions have been corrected.

3.2 PREPARATION:

3.2.1 General: Comply with the most stringent requirements of authorities having jurisdiction and with manufacturer's written instructions for preparing substrate. Remove all extraneous sources of wood cellulose and other edible materials such as wood debris, tree stumps and roots, stakes, formwork, and construction waste wood from soil and around foundations.

3.2.2 Soil Treatment Preparation: Remove foreign matter and impermeable soil materials that could decrease treatment effectiveness on areas to be treated. Loosen, rake, and level soil to be treated, except previously compacted areas under slabs and footings. Termiticides may be applied before placing compacted fill under slabs if recommended by termiticide manufacturer.

3.2.3 Fit filling hose connected to water source at the site with a backflow preventer, complying with requirements of authorities having jurisdiction.

3.2.4 Give sufficient notice to permit application to be made at least 12 hours before concrete placement. To avoid surface flow of the toxicant from the application site, do not apply treatment when soil or fill is excessively wet. Apply only after preparations for concrete placement have been completed. Do not disturb treated areas.

3.3 APPLICATION:

3.3.1 General: Comply with the most stringent requirements of authorities having jurisdiction and with manufacturer's EPA-Registered Label for products.

3.3.2 Application: Mix soil treatment termiticide solution to a uniform consistency. Provide quantity required for application at the label volume and rate for the maximum specified concentration of termiticide, according to manufacturer's EPA-Registered Label, to the following so that a continuous horizontal and vertical termiticidal barrier or

treated zone is established around and under building construction. Distribute the treatment evenly.

.1 Slabs-on-Grade and Basement Slabs: Under ground-supported slab construction, including footings, building slabs, and attached slabs as an overall treatment. Treat soil materials before concrete footings and slabs are placed.

.2 Foundations: Adjacent soil including soil along entire inside perimeter of foundation walls, along both sides of interior partition walls, around plumbing pipes and electric conduit penetrating slab, and around interior column footings and piers; and along entire outside perimeter, from grade to bottom of footing. Avoid soil washout around footings.

.3 Crawlspaces: Soil under and adjacent to foundations as previously indicated. Treat adjacent areas including around entrance platforms and equipment bases. Apply overall treatment only where attached concrete platform and porches are on fill or ground.

.4 Masonry: Treat voids.

.5 Penetrations: At expansion joints, control joints, and areas where slabs will be penetrated.

3.3.3 Avoid disturbance of treated soil after application. Keep off treated areas until completely dry.

3.3.4 Protect termiticide solution, dispersed in treated soils and fills, from being diluted until ground-supported slabs are installed. Use waterproof barrier according to EPA-Registered Label instructions.

3.3.5 Reapply soil treatment solution to areas disturbed by subsequent excavation, grading, landscaping, or other construction activities following application.

3.4 PROTECTION:

Post signs in the areas of application warning workers that soil poisoning has been applied. Remove signs when areas are covered by other construction.

END OF SECTION

34-003 – 01/22/2014

SECTION 02510

WATER DISTRIBUTION

PART 1 - GENERAL

1.1 SUMMARY:

1.1.1 Section Includes: Exterior water distribution system complete with valves, fire hydrants, water meters, and distribution pipelines from water supply mains to points of connection to the interior plumbing system of each building.

1.1.2 Related Documents: The Conditions of the Contract and Division 1 apply to this section as fully as repeated herein.

1.2 REFERENCES:

1.2.1 The editions of the specifications and standards referenced herein, published by the following organizations, apply to the work only to the extent specified by the reference. Refer to Section 01422 for information concerning availability and use of references.

American National Standards Institute (ANSI)
American Society for Testing and Materials (ASTM)
American Water Works Association (AWWA)
General Services Administration Federal Specifications (Fed. Spec.)
National Fire Protection Association (NFPA)

1.3 SUBMITTALS:

1.3.1 Product Data: Submit manufacturer's catalog cuts of pipe, fittings, joints and couplings; hydrants; meters; valves; and valve boxes.

1.3.2 Certificate of Compliance: Submit a certificate stating that the meters have been tested and that the accuracy and capacity meet the requirements of AWWA C700-95.

1.3.3 On a set of Contract Drawings, kept at the site during construction, mark construction that is installed differently from that indicated. Locate materials installed underground by dimensions from fixed identifiable points whether installed as indicated or not.

1.3.4 Submittal procedures and quantities are specified in Division 1.

1.4 REGULATORY REQUIREMENTS:

1.4.1 Materials and installation shall be in accordance with the following documents hereinafter referred to as the "Standard Specifications".

Standard Specifications for Public Works Construction, Latest Edition with Latest Supplement, unless otherwise specified
County of Riverside, "Regional Supplement Amendments", Latest Edition
City of Rancho Mirage Supplement Amendments to the Standard Specifications, Latest Edition)"
City of Rancho Mirage Special Provisions Latest Edition
Coachella Valley Water District Special Provisions Latest Edition

1.5 DELIVERY, STORAGE, AND HANDLING:

1.5.1 Delivery and Storage: Do not store materials directly on the ground. Support the pipe uniformly during shipping and storage. Do not stack higher than 4 feet nor stack with weight on bells. Cover plastic pipe to protect it from sunlight. Keep inside of pipe and fittings free of dirt and debris. Avoid scratching the pipe surface.

1.5.2 Do not install pipe that is cracked, broken, gouged, scratched or forming a clear depression. Remove damaged pipe from the site.

1.5.3 Do not install pipe contaminated with a petroleum product or any other toxic material whether inside or outside of pipe.

1.5.4 Take special care to avoid injury to coatings and linings on pipe and fittings; make satisfactory repairs if coatings or linings are damaged. Hoist pipe with mechanical equipment using a cloth belt sling or a continuous fiber rope which avoids scratching the pipe. Pipes may be lowered by rolling on two ropes controlled by snubbing.

PART 2 - PRODUCTS

3.1 PIPE AND FITTINGS:

3.1.1 Polyvinyl Chloride (PVC) Piping:

.1 Pipe 4" Diameter and Larger: AWWA C900-89, Class __. Fittings shall be cement lined cast-iron meeting the requirements of AWWA C110-93 with rubber gaskets meeting the requirements of AWWA C111-95.

.2 Pipe 3" Diameter and Smaller: ASTM D 1785, Schedule 40. Fittings shall be socket type Schedule 40 polyvinyl chloride with solvent welded joints.

3.1.2 Asbestos-Cement Pipe and Fittings: Pipe and couplings shall comply with ASTM C 296, Type as indicated on Drawings. Rubber rings shall comply with ASTM D 1869. Fittings shall be gray-iron or ductile-iron complying with AWWA C110-93, and shall have cement-mortar lining conforming to AWWA C104-95, standard thickness.

3.1.3 Ductile-Iron Piping and Fittings: Pipe shall comply with AWWA C151-96, Thickness Class as indicated on Drawings. Flanged pipe shall comply with AWWA C115-94. Fittings shall comply with AWWA C110-93. Pipe and fittings shall have cement-mortar lining conforming to AWWA C104-95, standard thickness.

3.1.4 Concrete Piping and Fittings: Type as indicated on Drawings. Pipe shall be designed for pressure rating of psi indicated. Cement used in the manufacture of the pipe and fittings shall be Type V conforming to ASTM C 150.

3.1.5 Steel Pipe and Fittings:

.1 Pipe 6" Diameter and Larger: Pipe shall comply with AWWA C200-91. Fittings shall comply with AWWA C208-96 and to AWWA C200-91. The minimum metal thickness for pipe wall for steel pipe shall be as indicated on Drawings, based on steel having a yield strength of psi indicated. Pipe and fittings shall have cement-mortar lining as indicated, complying with AWWA C205-95

3.1.6 Copper Tubing and Fittings: ASTM B 88-96, Type K. Fittings for solder-type joint shall comply with ANSI B16.18-84(1994) or ANSI B16.22-89; fittings for compression-type joint shall comply with ANSI B16.26-88, flared tube type.

3.1.7 Acrylonitrile-Butadiene-Styrene (ABS) Plastic Piping and Fittings: Pipe shall comply with ASTM D 1527, Schedule 40, or ASTM D 2282, SDR ___. Fittings shall comply with ASTM D 2468. Solvent cement for jointing shall comply with ASTM D 2235.

3.1.8 Polyethylene (PE) Plastic Piping or Tubing and Fittings: Pipe shall comply with AWWA C901-96, OD Base, DR ___. Fittings shall comply with ASTM D 3261.

3.1.9 Polybutylene (PB) Plastic Piping: Pipe shall comply with AWWA C902-88, OD Base, with DR as necessary to provide 150 psi minimum pressure rating. Fittings shall comply with AWWA C902-88.

3.2 ACCESSORIES:

3.2.1 Valves:

.1 Gate Valves: AWWA C500-93, Class __, inside screw type, iron body, bronze mounted, double disc, parallel seat, nonrising stem. Acceptable manufacturers or equal:

Mueller Co.
Decatur
Illinois
Kennedy Valve Div.

.2 Butterfly Valves: AWWA C504-94, __ psi working pressure, iron body, bronze disc, metal reinforced EPDM seat, stainless steel stem. Acceptable manufacturers or equal:

Demco Div.
ITT Grinnell Valve Co., Inc.
Keystone Valve Div.

.3 Swing Check Valves: AWWA C508-93, __ psi working pressure, iron body, cast iron disc, bolted cap. Acceptable manufacturers or equal:

Clow Corp.
Fairbanks Co.
Kennedy Valve Div.

.4 Valve Ends: Provide flanged, threaded, hub or sleeve type mechanical joint ends designed to suit pipe or tapping sleeves connections.

3.2.2 Valve Boxes: Valve boxes shall consist of Schedule 40 steel pipe with valve box cover. Coat steel pipe with coal-tar enamel coating complying with AWWA C203-91. Acceptable manufacturers include, but are not limited to, the following or equal:

Alhambra Foundry
Neenah Foundry

3.2.3 Fire Hydrants: Wet barrel type complying with AWWA C503-88, UL listed, and Fire Marshal approved. Provide frangible section near the ground line designed to break on impact. Acceptable manufacturers or equal:

Clow Corp.
James Jones
Long Beach Iron Works

.1 Provide two 2-1/2 inch and one 4 inch outlets. Provide cap with chain on each outlet.

.2 Provide flanged, threaded, hub or sleeve type mechanical joint inlet connection designed to suit pipe or tapping sleeves connections.

PART 4 - EXECUTION

4.1 UTILITY CONNECTIONS:

4.1.1 Permits and Fees: Refer to the Conditions of the Contract for requirements for permits and fees.

4.1.2 Connections to Plumbing Systems: Make connections of service laterals to plumbing facilities at a location 5 feet outside the building line as indicated. Connections shall be made utilizing standard prefabricated adapters installed in accordance with the pipe manufacturer's recommendations.

4.2 EARTHWORK:

4.2.1 Trenching, bedding, backfilling, and compacting requirements are specified in Section 02316.

4.3 INSTALLATION:

4.3.1 Pipe and Fittings: Inspect each section of pipe and fittings before lowering the pipe or fitting into the trench. Clean ends of pipe thoroughly. Remove foreign matter and dirt from inside of pipe and keep clean during and after laying.

.1 Handle pipe in a manner to avoid damage to the pipe. Do not drop or allow pipe to fall into trenches.

.2 When installing pipe in trenches, do not deviate more than 1 inch from line or 1/4 inch from grade. Measure for grade at the pipe invert.

.3 When the pipe laying is not in progress, including lunch hours, close the open ends of pipe. Do not permit trench water, animals, or foreign material to enter the pipe.

.4 Polyvinyl Chloride (PVC) Piping and Fittings: Install pipe 4" diameter and larger in accordance with UNI-B-3-88. Install pipe 3" diameter and smaller in accordance with ASTM D 2774 and ASTM D 2855.

.5 Asbestos-cement Pipe and Fittings: Install in accordance with AWWA C603-90. Cut and machine asbestos-cement pipe in the field in accordance with AWWA Manual M16-78.

.6 Ductile Iron Pipe and Fittings: Install in accordance with AWWA C600-93.

.7 Reinforced Concrete Pipe and Fittings: Install in accordance with AWWA Manual M9-95.

.8 Steel Pipe and Fittings: Install pipe 6" diameter and larger in accordance with AWWA Manual M11-89. Install pipe 4" diameter and smaller in accordance with AWWA C600-93.

.9 Copper Tubing: Cut copper tubing with square ends; remove fins and burrs. Make solder joints using 50-50 lead-tin solder. Before making joint, clean ends of tubing and inside of fitting or coupling with wire brush or abrasive. Apply a rosin flux to the tubing end and on recess inside of fitting or coupling. Then insert tubing end into fitting or coupling for the full depth of the recess and solder. For compression joints on flared tubing, insert tubing through the coupling nut and then flare tubing with an approved flaring tool.

.10 Acrylonitrile-Butadiene-Styrene (ABS) Plastic Piping and Fittings: Install in accordance with ASTM D 2774.

.11 Polyethylene (PE) Plastic Piping or Tubing and Fittings: Install in accordance with ASTM D 2774.

.12 Polybutylene (PB) Plastic Piping: Install in accordance with ASTM D 2774.

4.3.2 Valves: Check operation of all valves before installing. Install valves true to line and grade. Install valves in accordance with AWWA C600-93 and manufacturer's written instructions. Wrap all buried, ferrous metal valves with polyethylene film in conformance with Section 5-4 of AWWA C105-93.

4.3.3 Hydrants: Install in accordance with AWWA C600-93 and manufacturer's written instructions. Install with the face of the bottom flange of the barrel 4 to 6 inches above the adjacent ground or paving. Include 4'-0" by 4'-0" square concrete base 5-1/2 inches thick. The 4 inch outlet shall face the fire lane. Provide thrust block on bury elbow as detailed on the Standard Drawings W-10 and NFPA 24.

4.3.4 Meters: Install in accordance with AWWA C600-93 and manufacturer's written instructions. Check operation of all meters before installing. Install meters in meter boxes where indicated.

4.4 TESTS AND START-UP:

4.4.1 General: Furnish required labor, materials, and equipment for testing and proving tight construction and piping; replace equipment, materials, piping, and workmanship found to be defective or unsatisfactory.

4.4.2 Water Lines: Test all piping in maximum practical sections before covering or concealment. Flush water piping with clear water at as high velocities as are attainable. Eliminate air from system. Test piping with water under pump pressure of 200 psig minimum. Separate testing shall be performed on the public water main and on site private fire water main. Allowable pressure loss for the private fire water main shall be equivalent to that required by the City on the public water main. Certification of test results shall be presented to the Architect before final acceptance.

4.4.3 Test valves for leakage and alignment before backfilling.

4.4.4 Fire Hydrants: On-site fire hydrants shall be tested by the Contractor as directed by the City of Rancho Mirage Fire Department. In all tests the presence shall be required of the assigned Inspector.

4.4.5 Disinfection of Water Lines:

.1 Water pipelines shall be flushed and disinfected in accordance with Subparagraph 306-1.4.8 of the Standard Specification.

.2 Disinfecting shall be done by an independent company specializing in water treatment.

END OF SECTION

01/28/2014

SECTION 02535

SANITARY SEWAGE SYSTEMS

PART 1 - GENERAL

1.1 SUMMARY:

1.1.1 Section Includes: Exterior sanitary sewage system complete with manholes, cleanouts, and pipelines from points of connection to the interior plumbing system of each building to the existing sewage mains.

1.1.2 Related Documents: The Conditions of the Contract and Division 1 apply to this section as fully as repeated herein.

1.2 REFERENCES:

The editions of the specifications and standards referenced herein, published by the American Society for Testing and Materials (ASTM), apply to the work only to the extent specified by the reference. Refer to Section 01422 for information concerning availability and use of references.

1.3 SUBMITTALS:

1.3.1 Product Data: Submit manufacturer's catalog cuts of pipe, fittings, joints and couplings; valves; hydrants; and valve boxes.

1.3.2 On a set of Contract Drawings, kept at the site during construction, the Contractor shall mark construction that is installed differently from that indicated. Locate materials installed underground by dimensions from fixed identifiable points whether installed as indicated or not.

1.3.3 Submittal procedures and quantities are specified in Division 1.

1.4 REGULATORY REQUIREMENTS:

Materials and installation shall be in accordance with the following documents hereinafter referred to as the "Standard Specifications".

Standard Specifications for Public Works Construction, Latest Edition
County of Riverside, "Regional Supplement Amendments"
City of Rancho Mirage "Supplement Amendments"
Coachella Valley Water District "Supplemental Amendments",

1.5 DELIVERY, STORAGE, AND HANDLING:

1.5.1 Delivery and Storage: Do not store materials directly on the ground. Support the pipe uniformly during shipping and storage. Do not stack higher than 4 feet nor stack with weight on bells. Cover plastic pipe to protect it from sunlight. Keep inside of pipe and fittings free of dirt and debris. Avoid scratching the pipe surface.

1.5.2 Do not install pipe that is cracked, broken, gouged, scratched or forming a clear depression. Remove damaged pipe from the site.

1.5.3 Hoist pipe with mechanical equipment using a cloth belt sling or a continuous fiber rope which avoids scratching the pipe. Pipes may be lowered by rolling on two ropes controlled by snubbing.

PART 2 - PRODUCTS

2.1 PIPE AND FITTINGS:

2.1.1 Vitrified Clay Pipe: Comply with Section 207-8 of the Standard Specifications.

2.1.2 Acrylonitrile-Butadiene-Styrene (ABS) Solid Wall Sewer Pipe and Fittings: Comply with Section 207-15 of the Standard Specifications.

2.1.3 Polyvinyl Chloride (PVC) Sewer Pipe and Fittings: Comply with Section 207-17 of the Standard Specifications.

2.1.4 Acrylonitrile-Butadiene-Styrene (ABS) or Polyvinyl Chloride (PVC) Composite Sewer Pipe and Fittings: Comply with Section 207-16 of the Standard Specifications.

2.2 MATERIALS FOR MANHOLES:

2.2.1 Precast Concrete Units: Manhole sections shall comply with ASTM C 478 except that portland cement shall be Type II, low alkali. Gaskets for joints between section shall comply with ASTM C 443.

2.2.2 Manhole Frame and Cover Sets: Comply with subparagraph 206-3.3 of the Standard Specifications.

2.2.3 Concrete construction shall comply with Section 03300.

PART 3 - EXECUTION

3.1 UTILITY CONNECTIONS:

3.1.1 Permits and Fees: Refer to the Conditions of the Contract for requirements for permits and fees.

3.1.2 Connections to Plumbing Systems: Make connections of service laterals to plumbing facilities at a location 5 feet outside the building line as indicated. Connections shall be made utilizing standard prefabricated adaptors installed in accordance with the pipe manufacturer's recommendations.

3.2 EARTHWORK:

Trenching, bedding, backfilling, and compacting requirements are specified in Section 02316.

3.3 INSTALLATION:

3.3.1 Pipe and Fittings: Install pipe and fittings in accordance with Paragraph 306-1.2 of the Standard Specifications for Public Works Construction.

3.3.2 Manholes: Install precast manhole sections in accordance with ASTM C 891. Provide gaskets at joints between sections.

3.3.3 Cleanouts: Construct cleanouts of pipe and fittings extended to grade and provide ferrule and countersunk cleanout plug.

3.4 CLEANING:

Rodding Sewers: All sanitary sewer lines, shall be rodded out. Rodding shall be accomplished utilizing a rotary cutter which shall be full size of pipe being cleaned. The lines shall be flushed simultaneously. Rodding shall not take place until building is complete, but before occupancy. This construction shall be done in the presence of the Inspector.

3.5 TESTING:

After cleaning all sanitary sewer lines shall be air pressure tested per Section 306-1.4 of the Standard Specifications for Public Works Construction. Sewer lines with diameters less than 8" shall be tested per the standards for 8" diameter sewer lines. Any failures shall be corrected prior to final acceptance.

END OF SECTION

02/21/2014

SECTION 02630

STORM DRAINAGE

PART 1 - GENERAL

1.1 SUMMARY:

1.1.1 Section Includes: Foundation drainage, sub-drainage, and underground storm drainage systems complete with cleanouts, catch basins, inlets, manholes, piping, and connection of the roof drain lines specified in Division 15.

1.1.2 Related Documents: The Conditions of the Contract and Division 1 apply to this section as fully as if repeated herein.

1.2 REFERENCES:

The editions of the specifications and standards referenced herein, published by the following organizations, apply to the work only to the extent specified by the reference. Refer to Section 01422 for information concerning availability and use of references.

American Association of State Highway and Transportation Officials (AASHTO)
American Society for Testing and Materials (ASTM)

1.3 SUBMITTALS:

1.3.1 Product Data: Submit manufacturer's catalog cuts of pipe, fittings, joints and couplings; hydrants; meters; valves; and valve boxes.

1.3.2 On a set of Contract Drawings, kept at the site during construction, mark construction that is installed differently from that indicated. Locate materials installed underground by dimensions from fixed identifiable points whether installed as indicated or not.

1.3.3 Submittal procedures and quantities are specified in Division 1.

1.4 REGULATORY REQUIREMENTS:

Materials and installation shall be in accordance with the following documents hereinafter referred to as the "Standard Specifications".

Standard Specifications for Public Works Construction, Latest Edition
County of Riverside, "Regional Supplement Amendments"
City of Rancho Mirage Supplement Amendments
City of Rancho Mirage Special Provisions Latest Edition
Coachella Valley Water District Special Provisions Latest Edition

1.5 DELIVERY, STORAGE, AND HANDLING:

1.5.1 Delivery and Storage: Do not store materials directly on the ground. Support the pipe uniformly during shipping and storage. Do not stack higher than 4 feet nor stack with weight on bells. Cover plastic pipe to protect it from sunlight. Keep inside of pipe and fittings free of dirt and debris. Avoid scratching the pipe surface.

1.5.2 Do not install pipe that is cracked, broken, gouged, scratched or forming a clear depression. Remove damaged pipe from the site.

1.5.3 Take special care to avoid injury to coatings and linings on pipe and fittings; make satisfactory repairs if coatings or linings are damaged. Hoist pipe with mechanical equipment using a cloth belt sling or a continuous fiber rope which avoids scratching the pipe. Pipes may be lowered by rolling on two ropes controlled by snubbing.

PART 2 - PRODUCTS

2.1 STORM DRAIN LINES:

2.1.1 Asbestos Cement Pipe: Comply with Section 207-6.2 of the Standard Specifications, D-loading as indicated.

2.1.2 Acrylonitrile-Butadiene-Styrene (ABS) Composite Pipe and Fittings: Comply with Section 207-16 of the Standard Specifications.

2.1.3 Polyvinyl Chloride (PVC) Sewer Pipe and Fittings: Comply with Section 207-17 of the Standard Specifications.

2.1.4 Reinforced Concrete Pipe: Comply with Section 207-2 of the Standard Specifications, D-loading as indicated.

2.2 FOUNDATION AND SUBSURFACE DRAIN PIPE:

2.2.1 Perforated Corrugated Polyethylene Pipe: ASTM F 405, may be used where height of fill above pipe does not exceed 8 feet.

2.2.2 Perforated Asbestos Cement Pipe: ASTM C 508, Type II, may be used where height of fill above pipe does not exceed 20 feet.

2.2.3 Perforated Polyvinyl Chloride (PVC) Pipe: ASTM D 3034, SDR 35, may be used where height of fill above pipe does not exceed 35 feet.

2.2.4 Perforated Acrylonitrile-Butadiene-Styrene (ABS): ASTM D 2751 SDR 35, may be used where height of fill above pipe does not exceed 35 feet.

2.3 CULVERTS:

Corrugated Steel Pipe and Coupling Bands: Comply with Section 207-11 of the Standard Specifications.

2.4 RELATED MATERIALS:

2.4.1 Precast Concrete Units: Catch basins and inlets shall meet the requirements of ASTM C 913 and manhole sections shall meet the requirements of ASTM C 478 except that portland cement shall be Type II, low alkali.

2.4.2 Castings: Manufacture castings true to pattern free from blowholes, porosity, hard spots, shrinkage distortion or other defects. Castings shall be of grey iron, ductile iron or steel as indicated or as required to withstand loadings.

.1 Grey Iron Castings: Meet the requirements of ASTM A 48, Class 35.

.2 Ductile Iron Castings: Meet the requirements of ASTM A 536, Grade 60-40-18.

.3 Steel Castings: Meet the requirements of ASTM A 27 for mild to medium strength castings and ASTM A 148 for high strength castings.

2.4.3 Fabricated Steel Gratings and Frames: Fabricate from steel meeting the requirements of ASTM A 36 or ASTM A 576, Grades 1021, 1022, 1026, 1029 or 1030. Welding shall meet the requirements of AWS D1.1-96. Burrs, rough and sharp edges, and other flaws shall be removed. Warped pieces shall be straightened after all fabrication.

2.4.4 Painting: Castings and steel fabrications shall be given one coat of bituminous paint.

2.4.5 Concrete Appurtenances: Concrete for catch basins and manholes shall be 2500 psi at 28 days and conform to Section 03300. Reinforcing steel is specified in Section 03200.

2.4.6 Filter Fabric: Provide nonwoven polyester fabric. Acceptable products or equal:

Crown Zellerbach; Fibertex 200
Celanese Fibers; Mirafi 140
DuPont; Typar

2.4.7 Filter Material: Clean coarse sand and gravel or crushed stone 3/4 inch minimum to 1-1/2 inch maximum, free draining.

PART 3 - EXECUTION

3.1 TRENCHING:

3.1.1 Trenching is specified in Section 02316.

3.1.2 Trench bottom shall be accurately graded to provide uniform bearing and to support pipe, and a uniform slope of not less than 0.2 percent unless otherwise indicated. Excavate for pipe hubs. Remove unsuitable soils or rock to depths deemed necessary.

3.2 CONNECTIONS TO APPURTENANCES:

Where pipe connects into catch basin inlet or manhole walls, sleeves may be installed in the forms; after the forms are removed, the pipe shall be dry packed in place.

3.3 INSTALLATION OF SUBSURFACE DRAINS:

3.3.1 Bedding: Line the trench with filter fabric with joints in fabric lapped not less than 4 inches. Cover the bottom of the trench, full width, with 4 inches of filter material.

3.3.2 Pipe Laying: Lay pipe with perforations at the bottom and with sections joined with couplings that will hold pipe firmly in place without the use of sealing compounds or gaskets. Cutting and machining of asbestos pipe shall be done in accordance with OSHA and local Air Pollution Control District regulations.

3.3.3 Backfilling: Place filter material over the pipe to the height indicated and wrap filter fabric over the top of the material. Backfill and compact remainder of the trench in accordance with Section 02315.

3.4 INSTALLATION OF STORM DRAINS:

3.4.1 Bedding: Bedding for storm drain pipe is specified in Section 02316.

3.4.2 Installing Pipe: Install pipe in accordance with Section 306 of the Standard Specifications.

3.4.3 Backfilling: Do not backfill until elevations and dimensions of pipe are recorded on the Record Drawings as specified in Division 1. Backfilling and compaction are specified in Section 02316.

3.5 INSTALLATION OF CULVERTS:

Handle pipe carefully so as not to damage bituminous coating. If coating is damaged, give damaged areas an application of bituminous material equal to that specified for the pipe. Make joints using coupling bands furnished with the pipe. Keep space between pipe and couplings free from dirt so that corrugations will fit snugly. While tightening the bands, tap them with soft-head mallet to take up the slack and ensure a tight joint. Backfill and compaction are specified in Section 02316.

END OF SECTION

SECTION 02743

BITUMINOUS CONCRETE PAVING

PART 1 - GENERAL

1.1 SUMMARY:

1.1.1 Section Includes: Bituminous concrete paving including the application of base course, weed killer, seal coat, and installation of wood header boards.

1.1.2 Related Documents: The Conditions of the Contract and Division 1 apply to this section as fully as if repeated herein.

1.2 REFERENCES:

The editions of the specifications and standards referenced herein, published by the following organizations, apply to the bituminous concrete paving work only to the extent specified by the reference. Refer to Section 01422 for information concerning availability and use of references.

Standard Specifications: Standard Specifications for Public Works Construction, Latest Edition including County of Riverside, "Regional Supplement Amendments" and City of Rancho Mirage Supplement Amendments", referred to hereinafter as the "Standard Specifications"

American Association of State Highway and Transportation Officials (AASHTO)

1.3 SUBMITTALS:

1.3.1 Mix Designs: Submit mix designs for bituminous concrete prepared by a materials laboratory under the direct supervision of a California Registered Engineer, or a standard mix design proven in actual performance.

1.3.2 Certificates:

.1 Submit certificates of compliance from the supplier for bituminous materials for prime coat, paint binder, bituminous concrete, and seal coat.

.2 Submit weighmaster's certificates or certified delivery tickets for each truck load of bituminous material delivered to the project site.

.3 Upon completion of the weed control treatment, and as a condition for final acceptance, furnish a written certificate stating the brand name of the sterilant and the manufacturer, and that the sterilant used had at least the minimum required concentration, and that the rate and method of application complied in every respect with the conditions and standards contained herein.

1.3.3 Submittal procedures and quantities are specified in Division 1.

1.4 QUALITY ASSURANCE:

1.4.1 Bituminous Concrete Producers Qualifications: Use only materials furnished by a bulk bituminous concrete producer regularly engaged in production of hot-mix, hot laid bituminous concrete.

1.4.2 Applicator Qualifications: Paving machine and roller operators shall be fully trained and experienced in the installation of bituminous concrete paving on projects of similar size and complexity.

1.4.3 Regulatory Requirements: The quantity of volatile organic compounds (VOC) used in weed killer, seal coat, primer and other materials shall not exceed the limits permitted under the current regulations of the South Coast Air Quality Management District.

1.5 PROJECT CONDITIONS:

1.5.1 Environmental Conditions:

.1 Apply bituminous primer, paint binder, and seal coat only when the ambient temperature is above 50 degrees F and when the temperature has not been below 35 degrees F for 12 hours immediately before application.

.2 Do not apply bituminous materials when the base surface is wet or contains an excess of moisture which would prevent uniform distribution and the required penetration.

.3 Construct bituminous concrete surface course only when the ambient temperature is above 40 degrees F, when the underlining base is dry and when it is not raining.

1.5.2 Existing Conditions: Protect concrete walks, curbs and bases, and other improvements adjacent to the operations. Repair damage caused by employees or equipment. Cover building and other surfaces with paper or other protection, where required.

1.6 DELIVERY, STORAGE, AND HANDLING:

Deliver bituminous concrete in canvas covered trucks if necessary to maintain the specified spreading temperature.

1.7 WARRANTY:

In addition to the guarantee requirements specified in the General Conditions, furnish a written warranty that the soil sterilant will prohibit growth of weeds through the paving for a period of 2 years from the date of "Notice of Completion".

PART 2 - PRODUCTS

2.1 MATERIALS:

2.1.1 Aggregate Subbase: Standard Specifications, Article 200-2.6 for select subbase.

2.1.2 Aggregate Base: Standard Specifications, Article 200-2.2 for crushed aggregate base.

2.1.3 Cement Treated Base: Standard Specifications, Article 301-3.

2.1.4 Prime Coat: Standard Specifications, Article 203-2 for Classification SC-250 liquid asphalt.

2.1.5 Paint Binder: Standard Specifications, Article 203-3 for Classification SS-1h anionic asphalt emulsion.

2.1.6 Bituminous Concrete Surface Course: Standard Specifications, Article 203-6, for hot plant mixed aggregate and asphalt, produced by a commercial asphalt paving plant, except as modified herein.

.1 Asphalt Cement: Standard Specifications, Article 203-1, for steam refined paving asphalt, AR8000 Viscosity Grade, mixed with the aggregate at a rate specified in Article 203-6.3.

.2 Aggregate: Standard Specifications, Article 203-6.3 for Class B gradation.

2.1.7 Surface Sealer: AASHTO Designation SS-1h emulsion type.

2.1.8 Soil Sterilant: Chemical sterilant, borate chlorate sterilant containing not less than 25 percent sodium chlorate and 75 percent disodium octaborate mixed thoroughly with water at the rate of 1 to 2 pounds of sterilant per gallon of water.

2.1.9 Wood Header Boards: Grade marked foundation grade redwood. Provide sizes of header boards and stakes as indicated. Scabs shall be minimum 1" by 4" size.

2.2 MIXING:

2.2.1 Bituminous Concrete: Separate aggregate and keep in separate bins. Proportion sizes by means of multiple beam or dial scales of sufficient capacity to weigh the entire batch. Add asphalt and mix each batch until homogeneous mixture of uniformly distributed and properly graded and coated aggregates of unchanging appearance is produced, heated to a temperature of not less than 280 degrees F nor more than 320 degrees F.

2.2.2 Cement Treated Base Course: Mix cement treated base by the mixed in place method specified in Standard Specifications, Article 303-3.3.2.

PART 3 - EXECUTION

3.1 PREPARATION:

3.1.1 Subgrade Preparation: Scarify earth subgrade to a depth of not less than 6 inches, and compact to 95 percent of maximum density.

3.1.2 Moisten with water to approximate optimum moisture content, and while moist, roll until the surface is unyielding, with a power roller of such weight as to develop a pressure of not less than 200 pounds per linear inch of roller width.

3.1.3 Correct irregularities by dressing down or filling as may be required, to bring areas to true subgrade elevations.

3.1.4 Where filling is required, scarify the subgrade to bond the new material to the in-place material; use additional material as required, subject to the approval of the Architect, and provided by the Contractor.

3.1.5 Remove excess material from the site to a legal disposal area.

3.2 APPLICATION GENERAL:

Finish elevations, extent of asphalt paving and locations of type of asphalt and class of base shall be as indicated and specified. Bring subgrade elevations sufficiently below the finish elevations of the paving so as to accommodate the thickness of paving and base.

3.3 APPLICATION OF BASE COURSE:

3.3.1 Placing Aggregate Subbase Course: Place subbase course on the compacted subgrade and compact in accordance with Standard Specifications, Article 301-2. Finished surface of the subbase at any point shall not vary more than 0.08 foot above or below the grade indicated.

3.3.2 Placing Aggregate Base Course: Place base course on the compacted subgrade or aggregate subbase course and compact in accordance with Standard Specifications, Article 301-2 to provide a compacted thickness as indicated. Finished surface of the subbase at any point shall not vary more than 0.05 foot above or below the grade indicated.

3.3.3 Placing Cement Treated Base Course: Place base course on the compacted subgrade or aggregate subbase course and compact in accordance with Standard Specifications, Article 301-3 to provide a compacted thickness as indicated. Finished surface of the subbase at any point shall not vary more than 0.05 foot above or below the grade indicated.

3.4 STERILANT APPLICATION:

Place herbicide below asphalt paving. Meet the applicable environmental control requirements. Apply as directed by the manufacturer's printed instructions just before application of the paving. Take special care to insure that herbicide is not applied to any areas which are to be planted.

3.5 PLACING ASPHALT CONCRETE SURFACING:

3.5.1 Prime Coat: Before the surface course is laid, apply liquid asphalt primer to the base course surface in accordance with Standard Specifications, Article 302-5.3.

3.5.2 Paint Binder: Before the surface course is laid, paint all vertical surfaces of curbs, gutters, and drainage structures and all cold or existing pavement joints with a paint binder. Apply paint binder in accordance with Standard Specifications, Article 302-5.4.

3.5.3 Placing Bituminous Concrete Surface Course: Spread the mixture at a temperature of not less than 250 degrees F. Use canvas covered trucks if specified spreading temperature cannot be maintained. Do not place mixture during unsuitable weather. Place by use of a self-propelled asphalt paving machine, except on small areas where inaccessibility precludes their use. On these small areas spread by means of a spreader box, or by hand methods.

.1 Spread mixture in a single layer to such a thickness that, after receiving the final compaction, the finish paving shall have a minimum thickness as indicated.

3.5.4 Rolling: At proper time after the mixture has been spread, roll with power rollers of the type(s) and weight(s) required to obtain smoothness and density requirements specified. Use hot iron tampers at areas that are inaccessible to the rollers. Treat surface of the rollers with water or oil to prevent the mixture from adhering to rollers, but not in a quantity that would adversely effect the surface of the paving.

.1 The compacted surface course shall have a density of not less than percent of that attained in a laboratory specimen of the same mixture with a California Kneading Compactor in accordance with California Test 304.

3.5.5 Berms, curbs, and slow down strips shall be placed with an extrusion machine or other equipment capable of shaping and compacting the material to the required cross section.

3.6 SEAL COAT:

3.6.1 Do not apply sealer sooner than 2 weeks after completion of paving work. Cut back the emulsified asphalt with not over 50 percent water to obtain a uniform, free-flowing consistency. Apply by spraying machines to all areas of asphalt concrete paving, at uniform application of 0.05 to 0.10 gallon of sealer to each square yard of bituminous concrete. Sand shall not be used in the seal coat operation.

3.7 HEADER BOARD INSTALLATION:

Install header boards at perimeter of pavement with stakes spaced not over 24 inches on center unless otherwise indicated. Do not install header boards where bituminous concrete paving abuts buildings, concrete walks or curbs, or other pavements.

3.8 FIELD QUALITY CONTROL:

3.8.1 Before seal coating, flood the paved areas with water to check drainage and surface irregularities. Replace, or overlay high and low spots in an acceptable manner and water test the paving again after corrections have been made.

3.8.2 Replace or repair deficient and damaged asphalt paving.

3.8.3 All paving shall drain properly before being accepted. There shall be no variation greater than 1/4 inch plus or minus from a 10 foot straight-edge, except at grade changes.

3.9 PROTECTION:

Protect asphalt paving against vehicular traffic before and for 48 hours following seal coating.

END OF SECTION

02/21/2014

SECTION 02750

PORTLAND CEMENT CONCRETE PAVEMENT

PART 1 - GENERAL

1.1 SUMMARY:

1.1.1 Section Includes: Concrete paving for vehicular and pedestrian traffic, including driveway aprons, cross drains, and sidewalks. Section also includes mow strips, curbs, and gutters.

1.1.2 Related Documents: The Conditions of the Contract and Division 1 apply to this section as fully as if repeated herein.

1.2 REFERENCES:

The editions of the specifications and standards referenced herein, published by the following organizations, apply to the construction only to the extent specified by the reference. Refer to Section 01422 for information concerning availability and use of references.

American Concrete Institute (ACI)
American Society for Testing and Materials (ASTM)
Standard Specifications for Public Works Construction, Latest Edition including County of Riverside, "Regional Supplement Amendments", and City of Rancho Mirage “Supplement Amendments".

1.3 SUBMITTALS:

1.3.1 Product Data: For each type of manufactured material and product indicated.

1.3.2 Design Mixes: For each concrete pavement mix.

1.3.3 Samples: 10 pound sample of exposed aggregate.

1.3.4 Material Certificates: Signed by manufacturers certifying that each of the following materials complies with requirements:

.1 Cementitious materials and aggregates.
.2 Steel reinforcement and reinforcement accessories.
.3 Admixtures.
.4 Curing compounds.
.5 Applied finish materials.
.6 Joint fillers.

1.4 QUALITY ASSURANCE:

1.4.1 Mock-Ups: Provide sample panels not less than 20 square feet in size on the project site showing color and texture of each type of finish as follows:

Broom finish concrete natural gray color
Broom finish concrete with integral color
Broom finish concrete natural gray color and sealer
Broom finish concrete with integral color and sealer

1.4.2 Obtain Architect's approval of mockups before starting construction. Maintain approved mockups during construction in an undisturbed condition as a standard for judging the completed pavement.

1.4.3 Approved mockups may become part of the completed Work if undisturbed at time of Notice of Completion.

1.4.4 Regulatory Requirements: Provide curb cuts and ramps meeting the accessibility requirements of the 2010 California Building Code (CBC) Title 24 Part 2 Chapter 11 - Accessibility; and ADA Accessibility Guidelines for Buildings and Facilities, dated June 26, 1991 as amended April 5, 1993 and January 18, 1994, and July 2004.

PART 2 - PRODUCTS

2.1 MATERIALS:

2.1.1 Cement, Aggregate, Admixtures, Form Release Agents, Expansion Joint Fillers and Curing Materials: Conform to Section 03300.

2.1.2 Reinforcing Bars and Mesh: Conform to Section 03200. Furnish welded wire mesh in flat sheets, not rolls, unless otherwise acceptable to the Architect.

2.1.3 Forms: Steel, wood, or other suitable material of size and strength to resist movement during concrete placement. Use flexible spring steel forms or laminated boards to form radius bends.

2.1.4 Coloring Agent for Integrally Colored Concrete: Pigmented, water reducing and set controlling admixture packaged in cubic yard dosage increments. Admixture shall be completely free of calcium chloride and available in both normal set and retarded set forms, interchangeable without color variation.

.1 Pigment Components: Finely ground, pure mineral oxides.

.2 Water Reducing, Set Retarding Component: ASTM C 494, Type D.

.3 Water Reducing Component: ASTM C 494, Type A.

.4 Color: As selected by the Architect from manufacturer's standard colors.

.5 Products: Subject to compliance with requirements, provide one of the following products:

Admixtures, Inc.; Colorfull
L.M. Scofield; Chromix Admixture

2.1.5 Colored Dry-Shake Hardener: Factory-packaged dry combination of portland cement, graded quartz aggregate, coloring pigments, and plasticizing admixture. Use coloring pigments that are finely ground, nonfading mineral oxides interground with cement.

.1 Color: As selected by the Architect from manufacturer's standard colors.

.2 Products: Subject to compliance with requirements, provide one of the following products:

Euclid Chemical Co.; Surflex
L&M Construction Chemicals, Inc.; Quartz Plate
Master Builders, Inc.; Colorcron
L. M. Scofield Co.; Lithochrome Color Hardener
Inco Chemical Supply Co., Inc.; Inco Color Hardener

2.1.6 Clear Sealer: Subject to compliance with requirements, provide the following product:

Aqua Mix, Inc.; Penetrating Sealant

2.1.7 Aggregate for Base Course: APWA/AGC Standard Specifications, Article 200-2.4.

2.2 MIXING:

2.2.1 Provide mix designs for each class of concrete used in accordance with Section 03300.

2.2.2 Properties and Proportions:

.1 Proportion concrete to provide a minimum compressive strength at 28 days of 4000 psi for grass/concrete porous pavement, 3000 psi for stamped concrete, and 2000 psi for all other site work concrete.

.2 Slump: Between 3 and 4 inches maximum.

.3 Aggregate Size: Maximum 3/8 inch for turf block, 1 inch for other concrete paving.

.4 Air Content: 5 to 8 percent.

2.2.3 Mix concrete in accordance with the mixing requirements of Section 03300, except add color admixture at rate required to achieve color selected, where integrally colored concrete is indicated or specified.

PART 3 - EXECUTION

3.1 SURFACE PREPARATION:

Scarify earth subgrade to a depth of not less than 6 inches and compact it to 95 percent of maximum density.

3.2 BASE COURSE:

Spread and compact base course on prepared subgrade in accordance with APWA/AGC Standard Specifications, Article 301-2.

3.3 FORM CONSTRUCTION:

3.3.1 Set forms to required grades and lines, braced and secured. Install forms to allow continuous progress of work and so that forms can remain in place at least 24 hours after concrete placement. Coat forms with a non-staining form release agent.

3.3.2 Check completed formwork for grade and alignment to following tolerances:

.1 Top of forms not more than 1/8 inch in 10 feet.

.2 Vertical face on longitudinal axis, not more than 1/4 inch in 10 feet.

3.3.3 Clean forms after each use and coat with form release agent as required to ensure separation from concrete without damage.

3.3.4 Slope step treads 1/4 inch per foot to drain.

3.4 CONCRETE PLACEMENT:

3.4.1 General: Comply with requirements of Section 03300, unless otherwise indicated.

3.4.2 Do not place concrete until subbase and forms have been checked for line and grade. Moisten subbase if required to provide a uniform dampened condition at time concrete is placed. Do not place concrete around manholes or other structures until they are at required finish elevation and alignment.

3.4.3 Place concrete by methods that prevent segregation of mix. Consolidate concrete along face of forms and adjacent to transverse joints with internal vibrator. Keep vibrator away from joint assemblies, reinforcement, or side forms. Use only square-faced shovels for hand-spreading and consolidation. Consolidate with care to prevent dislocation of reinforcing and joint devices.

3.4.4 Deposit and spread concrete in a continuous operation between transverse joints as far as possible. If interrupted for more than 1/2 hour, place a construction joint.

3.4.5 Screed pavement surfaces with a straightedge and strike off. Commence initial floating using bull floats or darbies to form an open textured and uniform surface plane before excess moisture or bleed water appears on the surface. Do not further disturb concrete surfaces before beginning finishing operations or spreading dry-shake surface treatments.

3.5 INSTALLATION OF CURBS AND GUTTERS:

3.5.1 Construct concrete curbs and curb and gutters as indicated, with faces and backs formed for the full depth. Before removal of the forms finish the surface true to grade by means of a straightedge float, not less than 10 feet long, operated longitudinally over the surface of the concrete. Construct form clamps so as not to interfere with the operation of this float. Immediately after removing the front curb forms, trowel the face of the curb smooth to a depth of not less than 2 inches below the flow line or to the flow line of integral curb and gutter, and then finish with a steel trowel. Finish the top and gutter face and the front and back edges rounded unless otherwise indicated. Give the curb face a final fine brush finish with brush strokes parallel to the line of the curb. Give tops of curbs a smooth trowel finish.

3.5.2 Expansion Joints: Provide expansion joints at ends of curb returns and at maximum intervals of 80 feet on straight runs. Provide weakened plane joints at maximum intervals of 20 feet between expansion joints. Use preformed joint material as specified in Section 03300, and edge with a tool having a radius of not greater than 1/4 inch. Construct weakened plane joints to a minimum depth of 1/2 inch by scoring with a tool which will leave the corners rounded and insure a free movement of the concrete at the joint.

3.5.3 Finish top and face of curbs and curb and gutters true and straight, of uniform width, and free from humps, sags or other irregularities. When a straightedge 10 feet long is laid on the top or face of the curb or gutter, the surface shall not vary more than 1/4 inch from the edge of the straightedge, except at grade changes or curves.

3.5.4 Automatic machine may be used for curb and gutter placement at Contractor's option. If machine placement is to be used, submit revised mix design and laboratory test results that meet or exceed minimums specified. Machine placement shall produce curbs and gutters to required cross-section, lines, grades, finish, and jointing as specified for formed concrete. If results are not acceptable, remove and replace with formed concrete as specified.

3.6 INSTALLATION OF SIDEWALKS, MOW STRIPS AND OTHER FLATWORK:

3.6.1 Placing: Place concrete in accordance with Section 03300. Strike off and compact the fresh concrete until a layer of mortar has been brought to the surface. Float the surface to grade and cross section with a float not less than 10 feet long and not less

than 6 inches wide. Trowel surfaces to a uniform smooth texture free of trowel marks ready to receive final finish as specified below.

.1 Wetting of concrete surfaces during screeding, initial floating, or finishing operations is prohibited.

3.6.2 Joints: Tool the surfaces of flatwork to provide weakened plane joints in accordance with patterns indicated. Where no pattern is indicated, mark flatwork into rectangles not less than 12 square feet nor more than 20 square feet. Use a scoring tool that will leave the corners rounded. Form expansion joints 1/4 inch wide at all returns and opposite expansion joints in curbs. Where curb is not adjacent, form expansion joints at intervals of 60 feet. Fill expansion joints with premolded expansion joint filler as specified in Section 03300.

3.6.3 Tolerances: The surface of flatwork shall not vary more than 0.02 foot from a 10 foot straight edge except at grade changes.

3.6.4 Broom Finish: After concrete has been troweled and joints have been formed, use a stiff fiber broom to provide a uniformly straight scored surface at right angles to the general flow of traffic.

.1 Medium-to-Fine-Textured Broom Finish: Draw a soft bristle broom across float-finished concrete surface perpendicular to line of traffic to provide a uniform, fine-line texture.

.2 Medium-to-Coarse-Textured Broom Finish: Provide a coarse finish by striating float-finished concrete surface 1/16 to 1/8 inch deep with a stiff-bristled broom, perpendicular to line of traffic.

3.6.5 Colored Dry-Shake Hardener Finish: After initial floating, apply colored dry-shake materials to pavement surfaces according to manufacturer's written instructions and as follows:

.1 Uniformly apply colored dry-shake materials at a rate of 100 pounds per square foot, unless greater amount is recommended by manufacturer to match pavement color required.

.2 Uniformly distribute approximately two-thirds of colored dry-shake material over the concrete surface with mechanical spreader, and embed by power floating. Follow power floating with a second shake application, uniformly distributing remainder of dry-shake material to ensure uniform color, and embed by power floating.

.3 After final floating, apply a hand-trowel finish followed by a broom finish to concrete. Cure concrete with curing compound recommended by dry-shake material manufacturer. Apply curing compound immediately after final finishing.

3.6.6 Clear Sealer: Apply clear sealer where indicated, after concrete is fully hydrated (approximately 30 days). Apply in 2 coats in accordance with manufacturer’s instructions. Finished surface shall be uniform in appearance and not mottled.

3.6.7 Ramps for the Disabled: Finish surface in accordance with handicapped accessibility requirements of CCR Title 24 Part 2, Chapter 11; and ADA Accessibility Guidelines for Buildings and Facilities. Apply minimum of medium broom finish.

3.7 CURING:

Curing: Comply with requirements of Section 03300.

3.8 REPAIRS AND PROTECTION:

3.8.1 Remove and replace concrete pavement that is broken, damaged, or defective, or does not meet requirements in this Section.

3.8.2 Protect concrete from damage. Exclude traffic from pavement for at least 14 days after placement. When construction traffic is permitted, maintain pavement as clean as possible by removing surface stains and spillage of materials as they occur.

3.8.3 Maintain concrete pavement free of stains, discoloration, dirt, and other foreign material. Sweep concrete pavement before date scheduled for inspections.

3.9 CLEAN-UP:

During the progress of the work and at the completion of the work, remove all trash, debris, etc., from the project site and leave the site clean and in orderly condition.

END OF SECTION

02/19/2014

SECTION 02763

PAINTED TRAFFIC LINES AND MARKINGS

PART 1 - GENERAL

1.1 SUMMARY:

1.1.1 Section Includes: Painted traffic striping and symbols and game markings on pavements and curbs where indicated.

1.1.2 Related Documents: The Conditions of the Contract and Division 1 apply to this section as fully as if repeated herein.

1.2 SUBMITTALS:

1.2.1 Product Data: Submit certificates of compliance, manufacturer's specifications, and general recommendations for paint.

1.2.2 Submittal procedures and quantities are specified in Division 1.

1.3 REGULATORY REQUIREMENTS:

Provide pavement markings meeting the accessibility requirements of the 2010 California Building Code (CBC) Title 24 Part 2 Chapter 11 - Accessibility; and ADA Accessibility Guidelines for Buildings and Facilities, dated June 26, 1991 as amended April 5, 1993 and January 18, 1994, and July 2004.

1.4 DELIVERY, STORAGE, AND HANDLING:

Deliver paints and paint materials in original sealed containers that plainly show the designated name, batch number, color, date of manufacture, manufacturer's directions, and name of manufacturer. Provide storage facilities at the project site for maintaining materials at temperatures recommended by the manufacturer.

1.5 ENVIRONMENTAL CONDITIONS:

Do not apply paint when either air or pavement temperature is below 50 degrees F or above 95 degrees F; or when rain, fog, condensation, or temperatures below 50 degrees F are anticipated during the drying period.

PART 2 - PRODUCTS

2.1 MATERIALS:

2.1.1 Pavement Marking Paint: Comply with Section 210.1.6.4 of the Standard Specifications.

PART 3 - EXECUTION

3.1 PREPARATION:

3.1.1 Immediately before applying the paint, thoroughly clean the pavement surface of dust, dirt, sand, scale, water, oil, grease or other objectionable matter. Do not use solvent material that will damage pavements as cleaning agents. Immediately before painting, give pavement surfaces a final cleaning by means of a power broom and a power blower using compressed air following the brooming.

3.1.2 Provide warning devices required to protect the painting operations and the finished work.

3.2 APPLICATION OF TRAFFIC MARKINGS:

3.2.1 Apply traffic marking in accordance with Section 310-5.6 of the Standard Specifications.

3.3 APPLICATION OF GAME MARKINGS:

3.3.1 Do not apply pavement markings until after sealer has been applied as specified in Section 02743. Apply the paint only when the pavement is dry and clean. Under inclement weather conditions, or when temperature is below 50 degrees F, painting will not be permitted.

3.3.2 Equipment: Apply the game markings with a traffic stripe painting machine with a compressor capacity of at least 105 cubic feet and capable of operating at an air pressure of 125 psi. Mechanically agitate paint while the machine is in operation. Equip the striping machine with a pointer so designed that the machine will hold exactly to the alignment. Equip the propelling vehicle with a speedometer or tachometer, and with a suitable device for determining the quantity of paint in the container. Thoroughly clean the paint container and spray nozzles on the machine before starting each day's work.

.1 Where the configuration or location of a game stripe is such that a striping machine is not suitable, use hand spraying equipment and stencils or templates.

.3 Apply paint for word markings, letters, numerals, and symbols using hand spraying equipment and stencils or templates.

3.3.3 Application: Immediately following the preparation of the pavement surface, apply the striping at the rate of 100 to 110 square feet per gallon of paint. Apply lines 4 inches wide unless otherwise indicated. Apply the stripe of the indicated or specified width, with clean true edges and without sharp breaks. Repaint, to the applicable specifications, portions of the stripe damaged by any type of traffic within 24 hours after the stripe has been applied.

.1 Provide International Symbol of Accessibility for each parking stall for the disabled at location indicated. Symbol shall be 36 inches square, white on standard blue

background and shall conform to CBC Title 24 Part 2, Chapter 11; and ADA Accessibility Guidelines for Buildings and Facilities.

3.3.4 Tolerances: Apply striping within a tolerance of 1/2 inch in 50 feet. Apply markings and stripings to the widths indicated within a tolerance of 1/4 inch on straight sections and 1/2 inch on curved sections.

3.3.5 At completion touch up stripes and markings which are not clear and distinct or which are not uniform in color.

END OF SECTION

34-003 – 02/21/2014

SECTION 02782

PRECAST CONCRETE PAVERS

PART 1 – GENERAL

1.1 SUMMARY:

1.1.1 Section Includes: Precast turf block concrete pavers including aggregate base course, drainage mat, and sand laying course.

1.1.2 Related Documents: The Conditions of the Contract and Division 1 apply to this section as fully as if repeated herein.

1.2 RELATED WORK:

1.2.1 Preparation of sub-base.

1.2.2 Installation of concrete paving.

1.2.3 Geotextile Fabric.

1.3 REFERENCES:

The editions of the specifications and standards referenced herein, published by the following organizations, apply to the concrete pavers only to the extent specified by the reference. Refer to Section 01422 for information concerning availability and use of references.

American Society of Testing and Materials (ASTM)
State of California, Department of Transportation, Standard Specifications

1.4 SUBMITTALS:

1.4.1 Samples: Submit samples of paving stones of specified colors, patterns and sizes.

1.4.2 Product Data: Submit copies of manufacturer's catalog cuts and specifications of the complete list of materials to be installed.

1.4.3 Submittal procedures and quantities are specified in Division 1.

1.5 QUALITY ASSURANCE:

1.5.1 Materials Manufacturer Qualifications: Obtain precast concrete pavers from single manufacturer with not less than 5 years of successful experience using single layer production methods, multi layer production is not acceptable.

1.5.2 Installer Qualifications: A firm which has specialized in installation of precast concrete pavers for not less than 3 years and which is acceptable to manufacturer of pavers.

1.5.3 The Architect reserves the right to take and analyze samples of materials for conformance with specifications at any time. Contractor shall furnish samples upon request. Rejected materials shall be immediately removed from the site and replaced at Contractor's expense. Cost of testing of materials not meeting specifications shall be paid by Contractor.

1.5.4 Field Constructed Mock-Up: Before the installation of pavers, install a sample section of not less than 50 square feet using materials, bond and jointing specified for final work. Install mock-up at the site where directed.

.1 Obtain the Owner/Owner Representative's acceptance of visual qualities of the mock-up before start of paver work. Sample panels, if approved, may be left in place as part of the completed construction.

1.6 DELIVERY, STORAGE AND HANDLING:

1.6.1 Furnish standard products in manufacturer's standard containers bearing original labels showing quantity, analysis and name of manufacturer.

1.6.2 Paving stones shall be delivered and unloaded at the project site on pallets and bound in such a manner that no damage occurs to the products during hauling, handling or unloading at the project site.

1.7 PROJECT CONDITIONS:

Contractor shall acquaint himself with all site conditions. Should utilities or other work not indicated be found during excavations, notify the Architect for instructions as to further action. Failure to do so will make Contractor liable for all damage thereto arising from his operations subsequent to discovery of such utilities not indicated.

PART 2 – PRODUCTS

2.1 PAVERS:

2.1.1 Precast turf block Concrete Pavers: Colors, sizes and patterns shall be as indicated or as selected by the Architect. Produce pavers with spacer lugs to assist in maintaining uniform and proper spacing between pavers. Acceptable manufacturer or equal:

Orco Block Co.

.1 Style: Turfstone.

.2 Thickness: 80 MM.

.3 Color: As selected by Owner/Owner's Representative.

.4 Texture: Smooth.

2.1.2 Materials:

.1 General: Crushed aggregate Base shall be per Section 26, Class 2 Aggregate Base, of the State Standard Specifications (Caltrans), ¾" maximum.

.2 Disintegrated granite, glass, porcelain, brick, wood, steel (reinforcing nails, etc.) or slag shall not be used for aggregate base. If any detrimental material or deleterious substance shall not be used for aggregate base. If any detrimental material or deleterious substance is found in the base material, it shall be cause for rejection and be removed from the site. Per Subsection 26-1.02A "Class 2 Aggregate Base". Of the Caltrans Specification.

.3 Grading or blending of the material shall be done through a screening process.

.4 Tailgate spreading by dump truck will not be permitted except for spot dumping and in areas not readily accessible to spreading equipment.

.5 Other Materials: Coloring pigments, air-entraining agents, integral water repellents, finely ground silica, and other materials shall meet the requirements of applicable ASTM standards, or shall be previously established as suitable for use in concrete.

2.2 BASE COURSE:

Aggregate for Base Course: Meet the requirements of CALTRANS Specifications, Section 26 for a class 2 aggregate base, 1-1/2 inch maximum gradation.

2.3 SAND LAYING COURSE:

Elastomeric sand with 100 percent passing #4 sieve and a maximum of 3 percent passing #200 sieve size. Sand shall not have any clay content.

2.4 MISCELLANEOUS MATERIALS:

2.4.1 Composite Drainage Mat: Three dimensional, nonbiodegradable, plastic material designed to conduct water to foundation drainage system, with nonwoven geotextile fabric of polypropylene or polyester fibers, or a combination thereof. Acceptable products or equal:

American Wick Drain Corp.; Amerdrain 500
Akzo Industrial Systems Co.; Enkadrain 9120
Mirafi, Inc.; Miradrain 6000

PART 3 – EXECUTION

3.1 EXAMINATION:

3.1.1 Examine related work and surfaces before starting work of this section. Report to the Architect, in writing, site conditions which will prevent the proper completion of this work. Beginning the work of this section without reporting unsuitable conditions constitutes acceptance of site conditions. Required removal, repair, or replacement of this work caused by unsuitable conditions shall be done at no additional cost to Owner.

3.1.2 Verify that subbase or adjacent concrete paving has been installed to finish grades indicated less sand leveling course and paver thickness.

3.2 PREPARATION:

3.2.1 Subgrade: Scarify earth subgrade to a depth of not less than 6 inches and compact it to 95 percent of maximum density.

3.2.2 Edge Restraint: Restrain all edges of paver installation. Where permanent structures do not provide edge restraint, install concrete toe or other suitable methods as recommended by the paver manufacturer to prevent movement of edge pavers.

3.3 BASE COURSE:

3.3.1 Spread and compact base course on prepared subgrade in accordance with CALTRANS paragraphs 26-1.04 and 26-1.05. The base course shall be shaped to grade and cross section with an allowable tolerance of 1/4 inch.

3.3.2 Filtering Material: Place supporting layer of filtering material over compacted subgrade where drainage pipe is to be laid to depth indicated or, if not indicated, to a compacted depth of not less than 4 inches.

3.1.1 Composite Drainage Mat: Coordinate placement of drainage mat with placement of waterproofing and with other foundation drainage materials.

.1 Comply with manufacturer's instructions for securing matting to substrate. Use adhesives and mechanical fasteners as recommended by matting manufacturer. Lap edges of fabric and extend fabric around foundation drainage pipe as indicated and as recommended by mat manufacturer's recommendations. Protect in-place matting during backfill operations.

3.4 SAND LAYING COURSE:

Depth of leveling bed shall be maximum 1 inch and screeded to grade to allow paving stones to be 1/4 inch above finish grade before compaction during vibrating process. Do not disturb sand laying course once screeding and leveling to desired elevation is achieved.

3.5 PAVERS:

3.5.1 Pavers shall be clean and free of foreign materials before installation.

3.5.2 Paving work shall be plumb, level and true to line and grade; and installed to properly coincide and align with adjacent work and elevations. Joints between pavers shall be nominally 1/8 inch with no individual gap exceeding 1/4 inch.

3.5.3 Paving stones shall be installed hand tight and level on the undisturbed sand leveling bed.

3.5.4 Gaps at edge of paver surface shall be filled with standard pavers or with pavers cut to fit. Cutting of paving stones where necessary shall be done with a masonry saw.

3.5.5 Pavers shall be alternately selected from at least 3 pallets, working from top to bottom in each pallet stack.

3.5.6 Pavers shall be vibrated into the sand laying course using a vibrator capable of 3,000 to 5,000 pounds compaction force with the surface clean and the joints open.

3.5.7 After vibration, clean elastomeric type sand containing at least 30 percent of 1/8 inch particles shall be spread over the paving stone surface, allowed to dry, and vibrated into joints with additional vibrator passes and brushing so as to completely fill the joints.

.1 Remove surplus material from the surface and hose off per manufacturer's recommendations.

3.6 CLEANING:

3.6.1 Keep all areas of work clean, neat and orderly at all times.

3.6.2 Excess sand shall be swept into the joints or disposed from surface area.

3.6.3 The complete paving stone installation shall be washed down and cleaned to provide a clean finished installation.

3.6.4 Upon completion of work, remove from the premises all surplus materials, tools, equipment, rubbish and debris resulting from the work.

END OF SECTION

34-003 –03/09/2014

SECTION 02794

SYNTHETIC SURFACING

PART 1 – GENERAL

1.1 SUMMARY:

1.1.1 Section Includes: Synthetic athletic surfacing for pickleball courts.

1.1.2 Related Documents: The Conditions of the Contract and Division 1 apply to this section as fully as if repeated herein.

1.1.3 Related Sections:

.1 Asphaltic Concrete Base Course: Section 02743.

.2 Portland Cement Concrete Base Course: Section 02750.

.3 Exterior Athletic Equipment: Section 02880.

1.2 SUBMITTALS:

1.2.1 Product Data: Submit manufacturer's product data indicating materials, application procedures, colors, other pertinent data.

1.2.2 Submittal procedures and quantities are specified in Section 01334.

1.3 QUALITY ASSURANCE:

1.3.1 Applicator Qualifications: A firm which has specialized in installation of types of synthetic surfacing specified for not less than 3 years and which is acceptable to manufacturer of synthetic surfacing materials.

1.3.2 Synthetic Surfacing Materials Manufacturer Qualifications: Obtain synthetic surfacing materials of type specified from single manufacturer with not less than 3 years of successful experience in supplying synthetic surfacing materials.

1.4 DELIVERY, STORAGE, AND HANDLING:

Deliver materials in the original containers bearing the name of the manufacturer and brand.

1.5 ENVIRONMENTAL CONDITIONS:

Apply surfacing with temperature and relative humidity conditions for a period before, during, and after application as recommended by the manufacturer.

PART 2 – PRODUCTS

2.1 MATERIALS:

2.1.1 Description: A combination of a two component solid pour urethane with pre-cured rubber granules, and dehydrating cement powders. Acceptable products or equal:

Crossfield Products Corp.; Dex-O-Tex Resilient Athletic Surfacing
Sports Technology Group, Inc.; Amerisport Track #1
Sportec International, Inc.; Laykold 400

2.1.2 Physical Properties: When properly combined and installed, the base pour material and texture coat shall meet or exceed the following characteristics:

.1 Surface Hardness: Shore A hardness of 60-75 in accordance with ASTM D 2240.

.2 Moisture Absorption: 2.5 percent or less in accordance with MIL-D-3134.

.3 Abrasion Resistance: 0.270 Wear Index in accordance with FTMS #141, Method 6192 (CS #17 wheel).

2.1.3 Colors: As indicated.

PART 3 – EXECUTION

3.1 EXAMINATION:

3.1.1 Verification of Related Work: Before placing any materials, substantiate that the required concrete base course has been applied in accordance with synthetic surfacing manufacturer's recommendations; that the drainage system, curbs, and headers are in place, and that the required elevations and dimensional layout have been verified by a licensed civil engineer or surveyor.

3.1.2 Starting of work will be considered acceptance by the Contractor of the base course and other conditions involved.

3.2 INSTALLATION:

3.2.1 Apply the synthetic surfacing with a minimum thickness indicated, and in accordance with the manufacturer's instructions.

3.2.2 Final finish shall be free of trowel marks or other surface defects. If any soft or imperfect areas should develop in the surface, remove such areas and replace with new materials.

END OF SECTION

34-003 – 02/21/2014

SECTION 02795

PLAYGROUND SURFACING

PART 1 – GENERAL

1.1 SUMMARY:

1.1.1 Section Includes: Synthetic surfacing for playground.

1.1.2 Related Documents: The Conditions of the Contract and Division 1 apply to this section as fully as if repeated herein.

1.1.3 Related Sections:

.1 Asphaltic Concrete Base Course: Section 02743.

.3 Portland Cement Concrete Base Course: Section 02750.

.4 Synthetic Grass: Section 02796.

1.2 REFERENCES:

The editions of the specifications and standards referenced herein, published by the American Society for Testing and Materials (ASTM) apply to the work only to the extent specified by the reference. Refer to Section 01422 for information concerning availability and use of references.

1.3 SUBMITTALS:

1.3.1 Product Data: Submit manufacturer's product data indicating materials, application procedures, colors, other pertinent data.

1.3.2 Submittal procedures and quantities are specified in Division 1.

1.4 QUALITY ASSURANCE:

1.4.1 Applicator Qualifications: A firm which has specialized in installation of types of synthetic surfacing specified for not less than 3 years and which is acceptable to manufacturer of synthetic surfacing materials.

1.4.2 Synthetic Surfacing Materials Manufacturer Qualifications: Obtain synthetic surfacing materials of type specified from single manufacturer with not less than 3 years of successful experience in supplying synthetic surfacing materials.

1.5 DELIVERY, STORAGE, AND HANDLING:

1.5.1 Deliver materials in the original containers bearing the name of the manufacturer and brand.

1.5.2 Store materials protected from exposure to harmful environmental conditions and at a minimum temperature of 40 degrees F (4 degrees C) and a maximum temperature of 90 degrees F (32 degrees C).

1.5.3 Install surfacing system when minimum ambient temperature is 40 degrees F (1 degree C) and maximum ambient temperature is 90 degrees F (32 degrees C).

1.6 ENVIRONMENTAL CONDITIONS:

Apply surfacing with temperature and relative humidity conditions for a period before, during, and after application as recommended by the manufacturer.

1.7 PHYSICAL / CHEMICAL PROPERTIES:

1.7.1 Shock Attenuation: ASTM F 1292, Gmax – Less than 200.

1.7.2 Head Injury Criteria: Less than 1000

1.7.3 Tensile Strength: ASTM D 412 – 60 psi (413 kPa).

1.7.4 Tear Resistance: ASTM D 624 – 140%.

1.7.5 Water Permeability: 0.4 gal/yd2/second.

1.7.6 Dry Static Coefficient of Friction: ASTM D 2047 – 1.0.

1.7.7 Wet Static Coefficient of Friction: ASTM D 2047 – 0.9.

1.7.8 Dry Skid Resistance: ASTM E 303 – 89.

1.7.9 Wet Skid Resistance: ASTM E 303 – 57

1.7.10 Flammability: ASTM D 2859 – Pass.

1.8 WARRANTY:

The standard warranty is 5 years from date of completion of work.

PART 2 – PRODUCTS

2.1 MATERIALS:

2.1.1 Basemat: 16+% polyurethane (as ratio: 14% polyurethane divided by 86% rubber), 14% polyurethane, 86% rubber (based on entire rubber and polyurethane mix). Acceptable product or equal:

Surface America, Inc., PlayBound TurfTop Playground Surfacing

2.1.2 Top Surface (with infill).

2.1.3 Top Surface (without infill).

PART 3 – EXECUTION

3.1 EXAMINATION:

3.1.1 Verify that substrate conditions are suitable for installation of the playground surfacing system and do not proceed with installation until unsuitable conditions are corrected. New asphalt must be fully cured – up to 30 days. New concrete must be fully cured – up to 7 days.

3.1.2 Do not proceed with playground surfacing installation until all applicable site work, including substrate preparation, fencing, playground equipment installation, and other relevant work has been completed. Starting of work will be considered acceptance by the Contractor of the conditions involved.

3.2 PREPARATION:

3.2.1 If asphalt or concrete base, using a brush or short nap roller, apply primer to the substrate perimeter and any adjacent vertical barriers such as playground equipment support legs, curbs, or slabs that will contact the surfacing system at the rate of 300 ft2/gal (7.5 m2/L).

3.2.2 If crushed stone base, must be contained by wood or concrete border, which the material will abut. Using a brush or short nap roller, apply primer to the substrate perimeter and any adjacent vertical barriers such as playground equip support legs, curbs or slabs that will contact the surfacing system at the rate of 300 ft2/gal (7.5 m2L).

3.3 INSTALLATION:

3.2.1 Do not proceed with the playground surfacing installation until all applicable site work, including substrate preparation, fencing, playground equipment installation, and other relevant work has been completed.

3.2.2 Basemat Installation:

.1 Using screeds and hand trowels, install the basemat at a consistent density of 29 pounds.

.2 10 ounces per cubic foot (466 kg/m3) to the specified thickness.

.3 Allow basemat to cure for sufficient time so that indentations are not left in the basemat from applicator foot traffic or equipment.

.4 Do not allow foot traffic or use of the basemat surface until it is sufficiently cured.

3.2.3 TurfTop Installation:

.1 Rough cut synthetic grass rolls for installation.

.2 Using 15” wide cordura seam tape and 1-part urethane adhesive, seam synthetic grass rolls to form monolithic surface. Adhere synthetic grass to basemat around playground perimeter.

.3 If infill is included in system, using manual or machine-operated spreading equipment, distribute rubber infill throughout synthetic grass installation to within ¼” to ½” of fiber tip. (3 pounds per square foot).

3.3 PROTECTION AND CLEANING:

3.3.1 Protect the installed playground surface from damage resulting from subsequent construction activity on the site.

3.3.2 Periodically (once per month on most installations), sweep the entire playground surface, particularly the high-traffic areas, to groom the surfaces.

3.3.3 If infill system, periodically (once per two or three months), evaluate the infill level and replenish as necessary, particularly the high-traffic areas.

END OF SECTION

34-003 – 01/28/2014

SECTION 02796

SYNTHETIC GRASS

PART 1 – GENERAL

1.1 SUMMARY:

1.1.1 Section Includes: Synthetic grass for playground area as indicated on the Drawings.

1.1.2 Related Documents: The Conditions of the Contract and Division 1 apply to this section as fully as if repeated herein.

1.1.3 Related Sections:

.1 Asphaltic Concrete Base Course: Section 02743.

.2 Portland Cement Concrete Base Course: Section 02750.

.3 Playground Surfacing: Section 02795.

1.2 SUBMITTALS:

1.2.1 Product Data: Submit manufacturer's product data indicating materials, application procedures, colors, other pertinent data.

1.2.2 Submit manufacturer’s Care and Maintenance instructions.

1.2.3 Submittal procedures and quantities are specified in Division 1.

1.3 QUALITY ASSURANCE:

1.3.1 Applicator Qualifications: A firm which has specialized in installation of types of synthetic surfacing specified for not less than 3 years and which is acceptable to manufacturer of synthetic surfacing materials.

1.3.2 Synthetic Surfacing Materials Manufacturer Qualifications: Obtain synthetic surfacing materials of type specified from single manufacturer with not less than 3 years of successful experience in supplying synthetic surfacing materials.

1.4 DELIVERY, STORAGE, AND HANDLING:

Deliver materials in the original containers bearing the name of the manufacturer and brand.

1.5 WARRANTY:

Ten (10) Years.

PART 2 – PRODUCTS

2.1 MATERIALS:

2.1.1 Synthetic Grass: Acceptable product or equal:

SYNLawn; SYNTipede Platinum 351

2.1.2 Physical Properties: The synthetic grass material shall meet or exceed the following characteristics:

.1 Face Weight: 80 ounces.

.2 Total Weight: 108 ounces.

.3 Yarn Type: Polypropylene

.4 Pile Height: 1.25” +/- 15%.

.5 Drain Rate: 30 inches per hour.

.6 Roll Width: 15.0 feet.

.7 Color: Multi colors (Green).

PART 3 – EXECUTION

3.1 EXAMINATION:

3.1.1 Verification of Related Work: Before placing any materials, substantiate that the required base course has been applied in accordance with synthetic surfacing manufacturer's recommendations; that the drainage system, curbs, and headers are in place, and that the required elevations and dimensional layout have been verified by a licensed civil engineer or surveyor.

3.1.2 Starting of work will be considered acceptance by the Contractor of the base course and other conditions involved.

3.2 INSTALLATION:

3.2.1 Install in strict accordance with manufacturer’s written installation instructions.

3.2.2 Once area is ready for installation of synthetic surfacing, add a two to four layer of crushed aggregate until achieving the desired shape and contour. Work the aggregate with a rake and hand tamp until the surface is compact and smooth.

3.2.3 Trimming: Position the synthetic surfacing material and trim to proper shape. If using more than one roll, make certain the grain of the grass fibers point in the same direction.

3.2.4 Glue together seams, aligning two pieces of grass fiber edge-to-edge. Fold back the edges to lay synthetic grass seaming cloth the length of the seam.

3.2.5 Secure the seaming in place as directed. Apply seaming adhesive to the cloth per manufacturer's recommendations, spreading to a consistent thickness. After a few minutes, slowly ease the two edges back together, checking the fit as you go.

3.2.6 To secure the synthetic grass, use five to six-inch galvanized nails or landscape anchor pins around the perimeter and where necessary to keep the lawn flat.

3.3 CLEANING AND MAINTENANCE:

3.3.1 Using a landscape rake or broom, brush the fibers up and rinse with a garden hose. Periodic brushing and rinsing will keep your synthetic grass looking fresh, natural and beautiful.

END OF SECTION

34-003 – 01/28/2014

SECTION 02810

IRRIGATION SYSTEMS

PART 1 - GENERAL

1.1 SUMMARY:

1.1.1 Section Includes: Landscape irrigation systems.

1.1.2 Related Documents: The Conditions of the Contract and Division 1 apply to this section as fully as if repeated herein.

1.2 REFERENCES:

The editions of standards and specifications published by the following organizations, and referenced herein, apply to the work only to the extent specified by the reference. Refer to Section 01422 for information concerning availability and use of references.

American National Standards Institute (ANSI)
American Society for Testing and Materials (ASTM)
American Society of Sanitary Engineers (ASSE)
American Water Works Association (AWWA)
National Sanitation Foundation (NSF)

1.3 SUBMITTALS:

1.3.1 Product Data:

.1 Submit a list of irrigation equipment to be used, accompanied by manufacturer's catalog data, specifications, or other literature clearly indicating compliance with specification requirements for each item.

.2 Submit manufacturer's maintenance manuals and operating instructions for valves and automatic controllers.

.3 On the inside surface of the cover of each automatic controller, prepare and mount a chart showing the valves and sprinkler heads serviced by that particular controller. Number valves to match the operation schedule and the drawings. Only those areas controlled by that controller shall be shown. The chart shall be a plot plan, entire or partial, showing building(s), walks, roads and walls. A photostatic print of this plan, reduced as necessary and legible in all details, shall be made to a size that will fit into the controller cover. This print shall be reviewed and shall be hermetically sealed by plastic, and then be secured to the inside of the cover.

1.3.2 Record Drawings: Before final acceptance, make sure the following information is included on the record set of drawings specified in Section 01789.

.1 Changes in location of items or type of installations from that indicated.

.2 Valves shall be numbered and corresponding numbers shall be shown.

.3 Remote control valves, shut-off valves, and quick coupler valves shall be located by measured dimensions. Dimensions shall be given to permanent objects and shall be to the nearest one-half foot.

.4 Immediately upon the installation of buried pipe or equipment, indicate the locations of said equipment. Dimensions shall be given from permanent objects such as buildings, sidewalks, curbs and driveways.

1.3.3 Submittal procedures and quantities are specified in Section 01334.

1.4 REGULATORY REQUIREMENTS:

State and Municipal Codes and Regulations locally governing this construction, providing that requirements indicated and specified do not conflict; however, those exceeding the Code Requirements shall govern, unless written permission to the contrary is granted by the Architect.

1.5 DELIVERY, STORAGE, AND HANDLING:

1.5.1 Because of the nature of plastic pipe and fittings, exercise caution in handling, loading and storing, to avoid damage.

1.5.2 Store the pipe and fittings under cover until used. Transport pipe in a vehicle with a bed long enough to allow the length of pipe to lay flat so as not to be subjected to undue bending or concentrated external load at any point.

1.5.3 Discard pipe that has been dented or damaged unless such dent or damaged section is cut and rejoined with a coupling.

1.6 SEQUENCING AND SCHEDULING:

1.6.1 Install landscape headers, sidewalks, and mowing strips before installation of sprinkler system, except that sleeves and mainlines under paving shall be in place before paving construction.

1.6.2 Specimen trees (24 inch box and larger) shall be installed before the location of the irrigation system.

1.6.3 Obtain permission, in writing, from the Architect at least 2 working days before shutting off existing in-use water lines. The Contractor shall receive instructions from the Owner as to the exact length of time of each shut-off.

1.7 MAINTENANCE MATERIALS:

1.7.1 Deliver the following items to the Owner when construction activities in connection with the irrigation system are completed and before final acceptance of the Work:

.1 control valve keys.

.2 wrenches for removing each different type of sprinkler heads.

.3 48 inch tee wrenches for operating gate valves.

.4 quick coupler keys and hose bibb assemblies.

.5 keys for opening and locking each automatic controller.

PART 2 - PRODUCTS

2.1 MANUFACTURERS:

The design of the irrigation system is based on the manufacturers and products indicated. Substitutions will be permitted only with the Architects approval in accordance with Section 01630. Where such substitution will change the coverage or flow rates of the sprinkler heads, the request for substitution shall include layout plans showing revised sprinkler head locations. Such revised layout plan shall provide coverages and watering rates equivalent to those indicated.

2.2 PIPE, FITTINGS, AND CONNECTIONS:

2.2.1 Sizes: Pipe sizes indicated are nominal inside diameter unless otherwise noted.

2.2.2 Polyvinyl Chloride (PVC) Pipe: NSF 14-78 and the following:

.1 Pressure Lines Upstream of Remote Control Valves and Quick Couplers:

a. Lines 2 Inches and Larger: ASTM D 2241, PVC 1120 or 1220, Class 315 (SDR 13.5).

b. Lines 1-1/2 Inches and Smaller: ASTM D 1785, PVC 1120 or 1220, Schedule 40.

.2 Nonpressure Lines Downstream of Remote Control Valves:

a. Lines 3/4 Inch and Larger: ASTM D 2241, PVC 1120 or 1220, Class 200 (SDR 21).

b. 1/2 Inch Lines: ASTM D 2241, PVC 1120 or 1220, Class 315 (SDR 13.5).

.3 Polyvinyl Chloride Pipe Fittings and Connections: ASTM D 2464 or D 2466, Type II, Grade 1, Schedule 40, high impact molded fittings, manufactured from virgin compounds as specified for piping, tapered socket or molded thread type, suitable for either solvent weld or screwed connections. Machine threaded fittings and plastic saddle and flange fittings are not acceptable.

.4 Flexible Risers: Line size IPS, PVC plastic threaded adapters securely held to approximately 4.6 inches long synthetic rubber or flex-vinyl hose shanks, 85 pound minimum. Acceptable products or equal:

King Brothers; Flex Riser
Excalibre; Multiflex

.5 Solvent Cement: ASTM D 2564.

.6 Identification:

a. Furnish plastic pipe continuously and permanently marked with following information: Manufacturer's name or trade mark, size, class and type of pipe, working pressure at 73.4 degrees F, and NSF rating.

b. Furnish fittings permanently marked with following information: Nominal pipe size, type and schedule of material, and NSF seal of approval.

2.2.3 Brass Pipe, Fittings, and Connections:

.1 Pipe: ASTM B 43, IPS, Standard weight, 125 pounds, 85 percent red brass.

.2 Fittings and Connections: ANSI B16.15-85, Standard 125 pound class, threaded, 85 percent red brass.

2.2.4 Galvanized Iron Pipe, Fitting and Connections:

.1 Pipe: ASTM A 53, standard weight.

.2 Fitting and Connections: ANSI B16.3-85, Class 150, zinc coated or ANSI B16.4-85, Class 125, zinc coated.

2.2.5 Thread lubricant shall be teflon ribbon-type, suitable for threaded installations as per manufacturer's recommendations.

2.3 AUTOMATIC CONTROL COMPONENTS:

2.3.1 Automatic Controller: The irrigation controller is existing. The contractor shall verify the location of the existing irrigation controller. Existing controller shall be protected in place.

2.3.2 Automatic Control Wire: Electric wiring runs from controller to the automatic control valves shall be No. 14 Maxi-cable, solid, single conductor, copper wire, 4/64 inch insulation, 4/64 inch neoprene jacket, Style BR (Direct Burial).

2.3.3 Remote Control Valves: Normally closed electrically actuated diaphragm type, all brass and stainless steel construction. 24 volt solenoid, one-piece epoxy encapsulated and coated, operate on 2 watts real power. Removable top and

serviceable seat disc, manual bleed and flow control. Diaphragm one-piece molded construction with integral "O" ring seal reinforced with 600 pound test fabric. Capable of multiangle installation and manual slow closing operation without electrical power.

2.3.4 Remote Control Drip Assembly valve: Drip irrigation zones must include control valve, filtration, and pressure regulation components sized to meet the hydraulic demands and flow requirements of the zones that they service.

2.4 SPRINKLER HEADS:

2.4.1 Pop-up Spray Type: Full or part circle pop-up spray type sprinkler body, stem, nozzle and screen constructed of heavy duty plastic. The sprinkler shall have a soft wiper seal for cleaning debris from pop-up stem as it retracts into case to prevent sprinkler from sticking up. The sprinkler shall have a matched precipitation rate plastic nozzle with an adjusting screw capable of regulating the radius and flow. The sprinkler shall have a strong stainless steel retract spring for positive pop down. Pop-up height shall be as indicated. The sprinkler head shall have a screen under the nozzle to protect it from clogging and for easy removal for cleaning and flushing system. The sprinkler head shall have a bottom inlet and may have a side inlet for ease of installation.

2.4.2 Fixed Shrub Spray Type: Full or part circle fixed shrub spray type sprinkler, three piece design including a screen. The sprinkler body and nozzle shall be molded of plastic. The sprinkler nozzle shall be of same type as described above.

2.4.3 Pop-up Rotary Type: Rotary sprinkler of the gear driven type, capable of covering a maximum foot radius at psi with a maximum discharge rate of gpm. Nozzles shall be available for true matched precipitation rates.

.1 The sprinkler shall be available in adjustable arc or in full or part circle configuration. The adjustable arc sprinkler shall be adjustable from 40 degrees to 360 degrees in 1 degree increments. Adjustments shall be made from the top of the riser assembly in either the up or down position. The part circle unit shall be a fixed arc type available in 90 degree and 180 degree arcs.

.2 The pop-up sprinkler shall pop-up 4 inches with nozzle discharge point 3-3/4 inches above grade. Nozzle shall be integrally molded multiple orifice type that can be changed with tools included. Radius shall be adjustable by means of a plastic, allen diffuser pin. Nozzle turret shall be molded with a service indentation to accept a tool for raising nozzle piston for service.

.3 The sprinkler shall have a 3/4 inch NPT inlet and shall be accessible by a threaded cap for easy service.

.4 The body of the sprinkler shall be constructed of non-corrosive heavy duty ABS. The sprinkler shall be equipped with a filter screen for debris stoppage. The sprinkler shall also be available in shrub model with the same nozzle package. The sprinkler shall carry a 2 year unconditional warranty.

.5 All sprinkler heads with similar functions shall be of common manufacture and, with the exception of shrubbery heads, shall be marked with the manufacturer's name and identification in a position where they may be identified without being removed from the system.

2.5 VALVES AND VALVE ASSEMBLIES:

2.5.1 Quick Coupler Assembly:

.1 Quick Coupler Valves: 1 inch size, double lugged, locking cap, all brass or bronze construction with vinyl yellow top.

.2 Quick Coupler Key: Brass or bronze with a hose bibb assembly.

2.5.2 Check Valves:

.1 2 Inch and Smaller Valves on Nonpressure Lines: Brass, bronze, or plastic, 100 pound class, vertical spring loaded and swing check.

.2 2-1/2 Inch and Larger Valves on Pressure Lines: Cast iron, 150 pound class, with no slam feature.

2.5.3 Gate Valves:

.1 Gate Valves 2-1/2 Inch and Smaller: 150 pound class, all brass/bronze construction, single wedge disc, integral taper seats, nonrising stem, screwed bonnets, bronze cross handle and a brass/bronze ground joint union connection at the down stream outlet. Valves shall be capable of being repacked while under pressure.

2.5.4 Ball Valves: Valve shall be Type I, Grade 1 polyvinyl chloride (PVC) type 1220, of double true union design, with Teflon seats and Viton "O" rings. Valve shall have a pressure rating of 150 psi (10.5 kg/sq cm).

2.5.5 Anti-drain Valves: Plastic construction, with soft composition disc, stainless steel internal parts, and with spring tension adjustable from 4 psi to 15 psi. Valves shall prevent low head drainage quickly and positively after RCV shut-off.

2.5.7 Backflow Preventer:

Backflow preventers are existing. Contractor to

2.5.8 Wye Strainers:

.1 2 Inch and Smaller Strainers: Brass or bronze body, 300 pound class with internal screen of 20 mesh stainless steel and tapered self aligned seats.

.2 2-1/2 Inch and Larger Strainers: Cast iron body, 125 pound class with 50 mesh monel metal screen.

2.6 MATERIALS AND EQUIPMENT FOR DRIP IRRIGATION:

2.6.1 Flexible Hose for Drip Emitters: Nonrigid vinyl chloride hose extruded from V-38-3A high temperature formulation as specified in ASTM D 2287, uniformly black in color. Hose shall have a laboratory proven effective algaecide compounded into the formula.

.1 PVC hose shall meet or exceed the following criteria:

Durometer Hardness "C" scale	C-77
Specific Gravity (nominal P 23 deg. F)	1.34
Tensile Strength (min. PSI) 3000	

.2 Emitter Hose: Acceptable product or equal:

Salco Products, Inc.; PVC-AR

2.6.2 Fittings: Schedule 40, Type I, Grade 1, polyvinyl chloride (PVC), ASTM D 1784 and ASTM D 2466; uniformly white in color.

2.6.3 Emitter Distribution Tubing: Nonrigid vinyl chloride tubing with outside diameter of 0.22 inch (6mm). Acceptable product or equal:

Salco Products, Inc.; Series No. CT-125-PVC

2.6.4 Primer and Solvent for Slip-fit Flex Vinyl Hose and Fittings: Acceptable product or equal:

Industrial Polychemical Service; P-70 Primer and #795 Solvent

2.6.5 Multiple Outlet Drip Emitters: Virgin polypropylene body construction with a barbed hose connector compatible with 1/8 inch distribution tubing and containing virgin silicone inserts for full pressure compensation of flow.

.1 Single Outlet: Single outlet unit, self-flushing within a pressure range of from 0 to 5 psi (0 to 34 kPa). Each outlet on unit shall have a stable emission rate of gph within a pressure range of to psi. Total discharge rate of unit shall be gph.

.2 Multiple Outlet: Unit with 6 independently operating outlets with each outlet self-flushing within a pressure range of from 0 to 5 psi (0 to 34 kPa). Each outlet on unit shall have a stable emission rate of gph within a pressure range of to psi. Total discharge rate of unit shall be gph.

.3 Emitter shall be as indicated in the irrigation legend. Quantity of emitters and spacing shall be based on specific plant and site conditions.

2.6.6 Gravel: Clean, crushed aggregate, pea size.

2.6.7 Flush Valve: Integrally molded virgin PVC ball valve with CPVC ball, Teflon seats and Viton "O" rings.

.1 Provide flexible dual-layered pressure-compensating sub-surface dripline manufactured by Rain Bird or equal, with emitter spacing and dripline row spacing as indicated on irrigation drawings.

.2 Provide insert or compression fittings that are compatible with inline emitter tubing as indicated on irrigation drawings.

.3 Sub-Surface Dripline with pressure-compensating inline emitters. Sub-Surface Dripline model numbers for POTABLE water systems; a dual-layered, brown colored dripline tubing with emitter flow rates and spacing refer to irrigation plans.

2.7 ACCESSORY MATERIALS:

2.8.1 Valve Boxes: Boxes shall be plastic valve boxes with lockable covers. Minimum sizes of valve boxes shall be as follows:

.1 Remote Control Valves: 16" by 10".

.2 Gate, Globe, and Ball Valves: 10” inch diameter.

2.8.2 Tracer Wires: No. 12, Type TW plastic coated copper wires.

2.8.3 Concrete for thrust blocks and footings shall conform to Section 03300 for compressive strength of 2,000 psi concrete at 28 days.

2.8.4 Sand bed and backfill shall be Class A clean fill sand for piping under paved roads.

PART 3- EXECUTION

3.1 EXAMINATION:

3.1.1 Before start of installation of the irrigation system, examine the site to:

.1 Verify location of existing underground utilities valves, manholes, catch basins, and other appurtenances that will affect the layout of the sprinkler system.

.2 Verify location of existing trees, new specimen trees, and other obstructions that will affect the layout of the sprinkler system.

.3 Verify location of stub outs and points of connection to the water supply system.

.4 Verify grades to determine that work may safely proceed, keeping within the specified trench depths.

3.2 PREPARATION:

3.2.1 Locations indicated are diagrammatic and approximate only and shall be changed and adjusted as necessary and as directed to meet existing conditions and obtain complete water coverage.

3.2.2 Sprinkler lines shall have a minimum clearance of 6 inches from each other and from other utility lines. Do not install parallel lines directly over one another.

3.2.3 Stake out locations of all pipe, valves, equipment and irrigation heads and emitters using an approved staking method and maintain the staking of the approved layout until installation is completed.

3.3 EXCAVATION AND BACKFILLING OF TRENCHES:

3.3.1 Excavation and backfilling of trenches shall comply with Section 02300 and 02316 and the following additional requirements:

.1 When trenching through areas where topsoil has been spread, deposit topsoil on one side of trench and subsoil on opposite side.

.2 Provide sand bedding a minimum of extending 2 inches under, around and 2 inches above top of pipe for PVC plastic pipe and brass piping.

3.4 INSTALLATION OF PIPE:

3.4.1 Polyvinyl Chloride Pipe:

.1 Pipe shall be cut using approved PVC pipe cutters only. Sawed joints will not be permitted. All field cuts shall be bevelled to remove burrs and excess before fitting and gluing together.

.2 Pipe ends and fittings shall be wiped with MEK, or other primer recommended by the pipe manufacturer, before welding solvent is applied. Socket joints shall be made in accordance with recommended procedures for joining PVC plastic pipe and fittings with PVC solvent cement by the pipe and fitting manufacturer and procedures outlined in the Appendix of ASTM D 2564. Welded joints shall be given a minimum of 15 minutes to set before moving or handling.

.3 When connection is plastic to metal, PVC female adapters shall be used with short (not close) brass threaded nipples if needed to complete the connection. Joints shall be made with 2 wraps of Teflon tape and hand tightened plus one turn with a strap wrench.

.4 Assemble and place pipe lines having rubber ring seal joints in accordance with manufacturer's written instructions.

.5 Snake pipe from side-to-side of trench bottom to allow for expansion and contraction.

.6 Center load pipe with small amount of backfill to prevent arching and slipping under pressure. Leave joints exposed for inspection during testing.

.7 No water shall be permitted in the pipe until inspections have been completed and a period of at least 24 hours has elapsed for solvent weld setting and curing.

.8 At changes of direction of 45 degrees or more for pipes 2-1/2 inches and larger, construct concrete thrust blocks against undisturbed earth with sufficient bearing to resist the thrust of water.

3.4.3 Installation of Brass and Galvanized Iron Pipe:

.1 Cut piping by power hacksaw, circular cutting machine using an abrasive wheel, or hand hacksaw. Do not cut brass piping with metallic wheel cutter of any description. Ream and remove rough edges or burrs so smooth and unobstructed flow is obtained.

.2 Make threaded pipe connections using Teflon tape applied to male threads only.

3.4.4 Dielectric bushings shall be used for connections of piping of dissimilar metal materials.

3.4.5 Tracer Wires:

.1 Install tracer wire on all nonmetallic (plastic) irrigation main lines.

.2 Place the tracer wire on the bottom of the trench under the vertical projection of the pipe. Splice and solder joints and cover them with insulation type tape.

.3 Tracer wire shall follow the main line pipe and branch lines and terminate in the yard box with the control valves. Provide enough length of wire or tape to make a loop and attach a "Dymo-Tape" type plastic label with the designation "Tracer Wire".

3.5 INSTALLATION OF AUTOMATIC CONTROL COMPONENTS:

3.5.1 Automatic Sprinkler Controller: Test the existing controller after completion of electrical connections.

.1 Make connections to control wiring within the enclosure of the controller. All wire shall follow the pressure main insofar as possible.

3.5.2 Remote Control Wiring:

.1 Install Maxi Cable shall be a minimum of18 inches below finish grade and minimum of 4 inches from pipe or fittings except at terminal points.

.2 Install control wires and irrigation piping in common trenches wherever possible.

.3 Maxi-Cable Wire Splices: Allow only on runs of more than 300 feet, spliced as follows:

a. Strip off minimum of 2-1/2 inches of insulation from each wire.

b. Twist on Scotchlok electrical spring connector, minimum 4 complete turns.

c. Seal connector in epoxy resin.

d. Tape completed splice with Scotch 33 electrical tape.

3.5.3 Remote Control Valves: Install remote control valves in locations indicated, with a cover of 8 inches minimum over top of flow control stem. Install a union type connection. Fit each valve with a valve box, set over 1 cubic foot of pea gravel, and a cover.

3.6 INSTALLATION OF SPRINKLER HEADS:

Nozzle size of heads shall be adjusted to suit any particular conditions of the area. This shall be done after the system has been thoroughly tested, immediately after written notification by the Architect to do so.

3.7 INSTALLATION OF VALVES AND VALVE ASSEMBLIES:

3.7.1 Quick Coupler Assembly: Set valves plumb and true to finish grade and a maximum of 12 inches from paving, walks, headers or curbs. Connect to PVC pressure piping with brass nipple set in a concrete thrust block as indicated.

3.7.2 Valve Boxes: Install valve boxes as indicated. Install no more than one valve per box. Stencil valve number and controller letter on underside of valve box lid.

3.7.3 Existing backflow preventer protect in place.

3.8 FIELD QUALITY CONTROL:

3.8.1 Testing: Subject the main and lateral lines to a pressure test of 125 psi for a period of 4 hours. Perform testing in the presence of the Architect. Obtain approval before backfilling trenches. Do not cover lines until they have been inspected and approved.

3.8.2 Inspection: In cases where inspection of the sprinkler system construction is required or where portions of the construction are specified to be performed under the direction or inspection of the Architect, notify the Architect at least 3 working days in advance of the time such inspection or direction is required.

3.8.3 Inspection will be required for the following parts of the construction:

.1 Upon installation and testing of main lines and lateral lines; when pipes are laid and are to be submitted to pressure tests. Do not cover lines until they have been inspected and approved.

.2 Upon installation and testing of valves, quick couplers, automatic controllers, and control valves and wires.

.3 When the sprinkler system is completed, perform a coverage test, in the presence of the Landscape Architect, to determine if the coverage of water afforded the lawn and planting areas is complete and adequate. Furnish materials and perform construction required to correct inadequacies in the coverage.

.4 Final inspection and performance test shall be at the same time as the final inspection of the landscape construction.

Mainline and valve layout – 7 day notice

Mainline Pressure Test – 7 day notice

Coverage Test – 3 day notice

Final inspection – 7 day notice

3.9 CLEAN-UP:

As project progresses, maintain the site in a neat manner and remove unsightly debris as necessary. After completion of construction, remove debris and containers used in accomplishing construction. Sweep and clean sidewalks, asphalt, and concrete areas adjacent to plantings.

END OF SECTION

03/05/2014

SECTION 02811

DRIP IRRIGATION SYSTEMS

PART 1 - GENERAL

1.01 SCOPE

A. This section specification information is for Rain Bird low volume dripline irrigation products including Control Zone Kits, XFD, XFCV, XFS Dripline, compatible fittings, and Low Volume Emission Devices.

B. Provide labor, materials, supplies, equipment, tools, and transportation, and perform all operations in connection with and reasonably incidental to the complete installation of the drip irrigation system, and guarantee/warranty as shown on the drawings, the installation details, and as specified herein.

1.02 RELATED WORK

A. Division 00 – Procurement and Contracting Requirements

B. Division 01 – General Requirements

C. Division 15 – Plumbing

D. Division 16 – Electrical

E. Division 02 – Earthwork

F. Division 02 – Exterior Improvements

G. Division 15 - Utilities

1.03 SUBMITTALS

A. Deliver four (4) copies of submittals to Owner's Representative within ten (10) working days from date of Notice to Proceed. Furnish information in 3-ring binder with table of contents and index sheet. Index sections for different components and label with specification section number and name of component. Furnish submittals for components on material list. Indicate which items are being supplied on catalog cut sheets when multiple items are shown on one sheet. Owner's Representative. Incomplete submittals will be returned without review.

B. Materials List: Include dripline and low-volume irrigation components, control zone components, shop drawings and other components shown on drawings and installation details or described herein. Quantities of materials need not be included.

C. Manufacturers' Data: Submit manufacturers' catalog cuts, specifications, and operating instructions for equipment shown on materials list.

D. Shop Drawings: Submit shop drawings called for in installation details. Show products required for proper installation, their relative locations, and critical dimensions. Note modifications to installation details as part of shop drawing documentation.

1.04 FLUSHING AND TESTING

A. Schedule testing with Owner's Representative a minimum of three (3) days in advance of testing.

B. Provide clean, clear water, pumps, labor, fittings, and equipment necessary to conduct line flushing and testing procedures.

C. Recommended Dripline and Emitter Lateral Flushing Procedures.

1. Flush the system every two weeks for the first six (6) weeks and check the water that is flushed out for cleanliness. Establish a regular system flushing schedule for the future based on results from the initial six-week flushing schedule.

2. Flush the system completely after any repairs are made and monitor system operation closely under regular system flushing schedule.

3. Check the pressure at the supply and flush headers on a regular basis and compare with the pressure readings taken after installation.

D. Recommended Dripline and Emitter Lateral Leakage Testing Procedures.

1. Subject installed dripline tubing and emitter lateral piping to water pressure equal to specified operating pressure for ten (10) minutes. Test with control zone components and dripline flush valve components installed.

2. Partially backfill buried pipe and tubing to prevent movement under pressure. Expose couplings, fittings, and valve components.

3. Visually inspect valve assemblies and fittings for leakage and replace defective pipe, fitting, joint, valve, or appurtenance. Repeat test until test segment is free from leaks. Cement or caulking to seal leaks is prohibited.

E. Recommended Dripline and Emitter Lateral Operational Testing Procedures.

1. Activate each dripline and emitter lateral control zone valve in sequence from controller. Provide either one additional person with radio or use handheld remote to activate remote control valves from controller. Manually activating remote control valve using manual bleed mechanism at remote control valve is not an acceptable method of activation. Owner's Representative will visually observe operation, water application patterns, and leakage.

2. Replace or adjust defective valve, fitting, dripline segment, emitter lateral segment, or appurtenance to correct operational and coverage uniformity deficiencies.

3. Repeat test(s) until each dripline or emitter lateral test segment passes testing procedures. Repeat tests, replace components, and correct deficiencies at no additional cost to Owner and/or Owner's Representative.

1.05 CONSTRUCTION REVIEW

A. The purpose of on-site reviews by Owner's Representative is to periodically observe work in progress, Contractor's interpretation of construction documents, and to address questions with regard to installation.

B. Schedule reviews for dripline layout and system testing with Owner's Representative as indicated on drawings or as required by these specifications.

C. Impromptu reviews may occur at any time during project.

D. A review will occur at completion of irrigation system installation and Project Record Drawing submittal.

1.06 GUARANTEE/WARRANTY AND REPLACEMENT

A. The purpose of guarantee/warranty is to ensure that Owner receives irrigation materials of prime quality, installed and maintained in thorough and careful manner.

B. Contractor is responsible for providing guarantee/warranty of irrigation materials, equipment, and workmanship against defects for period of one (1) year from formal written acceptance by Owner's Representative. Fill and repair depressions. Restore landscape, utilities, structures and site features damaged by settlement of irrigation trenches or excavations. Repair damage to premises caused by defective items. Make repairs within seven (7) days of notification from Owner's Representative.

C. Replace damaged items with new and identical materials, using methods specified in contract documents or applicable codes. Make replacements at no additional cost to contract price.

D. Guarantee/warranty applies to originally installed materials and equipment, and replacements made during guarantee/warranty period.

PART 2 – PRODUCTS

2.01 QUALITY

A. Provide and install specified equipment and materials, delivered new to the site in unopened containers and confirmed to be without flaws or defects.

2.02 LATERAL PIPE AND FITTINGS

A. Use rigid, unplasticized polyvinyl chloride (PVC) 1120, 1220 National Sanitation Foundation (NSF) approved pipe, extruded from material meeting requirements of Cell Classification 12454-A or 12454-B, ASTM Standard D1784, with integral belled end suitable for solvent welding.

B. Use Class 160, SDR-26, rated at 160 PSI (11 bar), conforming to dimensions and tolerances established by ASTM Standard D2241. Use PVC pipe rated at higher pressures than Class 160 in cases where small nominal diameters are not manufactured in Class 160.

(or)

Use Class 200, SDR-21, rated at 200 PSI (13,8 bar), conforming to dimensions and tolerances established by ASTM Standard D2241. Use PVC pipe rated at higher pressures than Class 200 in the cases where small nominal diameters are not manufactured in Class 200.

(or)

Use Schedule 40 conforming to dimensions and tolerances established by ASTM Standard D1785; UV radiation resistant.

C. Use Schedule 40, Type 1, PVC solvent weld fittings conforming to ASTM Standards D2466 and D1784 for PVC pipe. Use primer approved by pipe manufacturer. Solvent cement to conform to ASTM Standard D2564, of type approved by pipe manufacturer.

D. Use PVC Schedule 80 nipples and PVC Schedule 40 or 80 threaded fittings for threaded pipe connections as specified on the drawings and details.

E. Threaded joint sealant: Use non-hardening, nontoxic pipe thread sealant formulated for use on threaded connections and approved by pipe fitting or valve manufacturer.

2.03 DRIP IRRIGATION COMPONENTS

A. Rain Bird Control Zone Kits

1. General Information

   a. Provide control zone kits manufactured by Rain Bird as indicated on construction drawings.

   b. Control zone kit assemblies for dripline irrigation zones must include control valve, filtration, and pressure regulation components sized to meet the hydraulic demands and flow requirements of the zones that they service.

2. Rain Bird Low Flow Control Zone Kit for dripline zones with flows from 0.2 to 5.0 GPM (0.8 to 18.9 lpm), including low flow valve (LFV) and pressure regulating filter (PRF).

   a. Available model numbers:
      1) XCZ-075-PRF [3/4" (19 mm) Low Flow valve and 3/4" (19 mm) PR filter]
      2) XACZ-075-PRF [3/4" (19 mm) Low Flow Anti-siphon valve and 3/4" (19 mm) PR filter]
      3) XCZ-LF-100 [1" (25 mm) Low Flow valve 1" with and 3/4" (19 mm) PR filter]
      4) XCZF-LF-100 [1" (25 mm) Low Flow valve 1" with flow control handle and 3/4" (19 mm) PR filter]

   b. Low Flow Valve (LFV) component specifications include:
      1) Valve body and bonnet constructed of high impact, weather-resistant plastic, stainless steel and other chemical/UV resistant materials
      2) Diaphragm with a double-knife seal, constructed of durable Buna-N rubber with a clog-resistant metering orifice
      3) Energy-efficient, low-power encapsulated solenoid with captured plunger and 90 mesh (200 micron) solenoid filter
      4) External bleed for manual system flushing during start-up, internal bleed for manual zone activation during maintenance operations
      5) Inlet pressure rating: 20 to 120 PSI (1,4 to 8,3 bar)
      6) Female threaded inlet and outlet connections
      7) Anti-siphon valve configuration (AXCZ-075-PRF) includes listed features and incorporates atmospheric vacuum breaker with I.A.P.M.O and A.S.S.E. listing approval

   c. Pressure Regulating Filter (PRF) combines filtration and pressure regulation in one integrated unit for protection of downstream components of drip irrigation system. PRF component specifications include:

1) Compact “Y” filter body and cap configuration constructed of glass-filled, UV-resistant polypropylene, with 120 PSI (8,3 bar) operating pressure rating. Maximum dimensions of filter body; Height: 4 1/2" (11,4 cm), Length: 5 1/2" (14 cm), Width: 2" (5,1 cm)
2) Standard 200 mesh (75 micron) filter screen constructed of durable stainless steel attached to a polypropylene frame. Screen is serviceable for cleaning purposes by unscrewing cap from filter body and removing filter element.
3) Normally-open pressure regulating device with preset outlet pressure of approximately 30 PSI (2,1 bar). Pressure regulating device allows full flow with minimal pressure loss unless inlet pressure is greater than preset level. As inlet pressure increases above preset level, internal spring compresses to reduce downstream pressure.
4) Male threaded 3/4” (19 mm) inlet and outlet connections.

(or)

3. Rain Bird Medium Flow Control Zone Kit for dripline zones with flows from 3.0 to 15.0 GPM (11.4 to 56.8 lpm), including Rain Bird DV or ASVF valve and pressure regulating filter (PRF).

a. Available model numbers:
1) XCZ-100-PRF [1” (25 mm) DV valve and 1” (25 mm) PR filter]
2) XCZF-100-PRF [1” (25 mm) DV valve with removable flow control handle and 1” (25 mm) PR filter]
3) XACZ-100-PRF [1” (25 mm) Anti-siphon Valve and 1” (25 mm) PR Filter]

b. DV Valve component specifications must include:
1) Valve body and bonnet constructed of high impact, weather-resistant plastic, stainless steel and other chemical/UV resistant materials
2) Energy-efficient, low-power encapsulated solenoid with captured plunger and 90 mesh (200 micron) solenoid filter
3) External bleed for manual system flushing during start-up, internal bleed for manual zone activation during maintenance operations
4) Inlet pressure rating: 20 to 120 PSI (1.4 to 8.3 bar)
5) Female threaded inlet and outlet connections
6) Anti-siphon valve configuration (XACZ-100-PRF) includes listed features and incorporates atmospheric vacuum breaker with I.A.P.M.O and A.S.S.E. listing approval

c. Pressure Regulating Filter (PRF) combines filtration and pressure regulation in one integrated unit for protection of downstream components of drip irrigation system. PRF component specifications include:
1) Compact “Y” filter body and cap configuration constructed of glass-filled, UV-resistant polypropylene, with 120 PSI (8,3 bar) operating pressure rating. Maximum dimensions of filter body; Height: 4 1/2" (11,4 cm), Length: 5 1/2" (14 cm), Width: 2" (5,1 cm)

2) Standard 200 mesh (75 micron) filter screen constructed of durable stainless steel attached to a polypropylene frame. Screen is serviceable for cleaning purposes by unscrewing cap from filter body and removing filter element.
3) Normally-open pressure regulating device with preset outlet pressure of approximately 40 PSI (2,8 bar). Pressure regulating device allows full flow with minimal pressure loss unless inlet pressure is greater than preset level. As inlet pressure increases above preset level, internal spring compresses to reduce downstream pressure.
4) Male threaded 1” (25 mm) inlet and outlet connections.

(or)

4. Rain Bird Medium Flow Commercial Control Zone Kits for dripline zones with flows from 3.0 to 20.0 GPM (11.4 to 75.7 lpm), including, Rain Bird PESB valve with PVC ball valve and pressure regulating quick-check basket filter and Rain Bird PGA valve with pressure regulating basket filter.

a. PESB Available model numbers:
1) XCZ-100-PRB-COM [1” (25 mm) PVC ball valve, 1” (25 mm) Rain Bird PESB valve, and 1” (25 mm) PRB-QKCHK-100 quick check pressure regulating basket filter]

b. PESB valve assembly component specifications must include:
1) 1” (25 mm) PVC full-port ball valve with female threaded inlet and outlet connections
2) PESB valve body and bonnet constructed of durable glass-filled nylon, stainless steel and other chemical/UV resistant materials
3) Diaphragm constructed of a durable Buna-N rubber material reinforced with nylon
4) One-piece solenoid with captured plunger and 90 mesh (200 micron) solenoid filter
5) External bleed for manual system flushing during start-up, internal bleed for manual zone activation during maintenance operations
6) Inlet pressure rating: 20 to 200 PSI (1,4 to 13,8 bar)
7) Female threaded inlet and outlet connections

c. PGA Available model number:
1) XCZ-100-PRB-LC [1” (25 mm) Rain Bird PGA valve, and 1” (25 mm) PRB -100 pressure regulating basket filter]

d. PGA valve assembly component specifications must include:
1) PGA valve body and bonnet constructed of durable glass-filled nylon, stainless steel and other chemical/UV resistant materials
2) Diaphragm constructed of a durable Buna-N rubber material reinforced with nylon
3) One-piece solenoid with captured plunger and 90 mesh (200 micron) solenoid filter
4) External bleed for manual system flushing during start-up, internal bleed for manual zone activation during maintenance operations

5) Inlet pressure rating: 15 to 150 PSI (1,4 to 13,8 bar)
6) Female threaded inlet and outlet connections

e. Pressure Regulating Quick Check Basket Filter combines filtration and pressure regulation in one integrated unit for protection of downstream components of drip irrigation system. Pressure regulating basket filter component specifications must include:
1) Basket style body and jar-top cap constructed of heavy-duty glass-filled, UV-resistant polypropylene, with 150 PSI (10,3 bar) operating pressure rating. Maximum dimensions of filter body; Height: 6 1/2" (16,5 cm), Length: 6 1/2" (16,5 cm), Width: 3 1/2" (8,9 cm)
2) Indicator incorporated into filter cap that changes color from green to red during operation when the filter element requires cleaning.
3) Standard 200 mesh (75 micron) filter screen constructed of stainless steel attached to propylene frame. Screen is serviceable for cleaning purposes by unscrewing cap from filter body and removing filter element.
4) Normally-open in-line pressure regulating device, constructed of durable, UV resistant non-corrosive material able to accommodate an inlet pressure rating of not less than 150 PSI (10,3 bar), with preset outlet pressure of approximately 40 PSI (2,8 bar). Pressure regulating device allows full flow with minimal pressure loss unless inlet pressure is greater than preset level. As inlet pressure increases above preset level, internal spring compresses to reduce downstream pressure.
5) Male threaded 1” (25 mm) inlet and outlet connections.

(or)

5. Rain Bird High Flow Commercial Control Zone Kit for dripline zones with flows from 15.0 to 40.0 GPM (56,8 to 151,4 lpm), including Rain Bird PESB valve and two parallel Rain Bird pressure regulating quick-check basket filters.

a. Available model numbers:
1) XCZ-150-PRB-COM [1 1/2” (38 mm) Rain Bird PESB valve, and two 1” (25 mm) PRB-QKCHK-100 pressure regulating check basket filters]

b. PESB valve assembly component specifications must include:
1) PESB valve body and bonnet constructed of durable glass-filled nylon, stainless steel and other chemical/UV resistant materials
2) Diaphragm constructed of a durable Buna-N rubber material reinforced with nylon
3) One-piece solenoid with captured plunger and 90 mesh (200 micron) solenoid filter
4) External bleed for manual system flushing during start-up, internal bleed for manual zone activation during maintenance operations
5) Inlet pressure rating: 20 to 200 PSI (1,4 to 13,8 bar)
6) Female threaded inlet and outlet connections

c. Pressure Regulating Quick Check Basket Filter combines filtration and pressure regulation in one integrated unit for protection of downstream components of drip irrigation system. Pressure regulating basket filter component specifications must include:

1) Basket style body and jar-top cap constructed of heavy-duty glass-filled, UV-resistant polypropylene, with 150 PSI (10,3 bar) operating pressure rating. Maximum dimensions of filter body; Height: 6 1/2" (16,5 cm), Length: 6 1/2" (16,5 cm), Width: 3 1/2" (8,9 cm)
2) Indicator incorporated into filter cap that changes color from green to red during operation when the filter element requires cleaning.
3) Standard 200 mesh (75 micron) filter screen constructed of stainless steel attached to propylene frame. Screen is serviceable for cleaning purposes by unscrewing cap from filter body and removing filter element.
4) Normally-open in-line pressure regulating device, constructed of durable, UV resistant non-corrosive material able to accommodate an inlet pressure rating of not less than 150 PSI (10,3 bar), with preset outlet pressure of approximately 40 PSI (2,8 bar). Pressure regulating device allows full flow with minimal pressure loss unless inlet pressure is greater than preset level. As inlet pressure increases above preset level, internal spring compresses to reduce downstream pressure.
5) Male threaded 1” (25 mm) inlet and outlet connections

B. Rain Bird XF Series Dripline Components

1. General Information

a. Provide flexible dual-layered pressure-compensating inline XF Series Dripline manufactured by Rain Bird, with emitter spacing and dripline row spacing as indicated on construction drawings.

b. Provide insert or compression fittings manufactured by Rain Bird that are compatible with inline emitter tubing as indicated on construction drawings.

2. Rain Bird XFD On-Surface Dripline with pressure-compensating inline emitters.

a. Available Rain Bird XFD On-Surface Dripline model numbers for POTABLE water systems; a dual-layered, brown colored dripline tubing with emitter flow rates and spacing as shown:

1) Rain Bird XFD-06-12; 0.6 GPH (2,3 lph) emitters spaced 12” (30,5 cm) on-center
2) Rain Bird XFD-06-18; 0.6 GPH (2,3 lph) emitters spaced 18” (45,7 cm) on-center
3) Rain Bird XFD-09-12; 0.9 GPH (3,4 lph) emitters spaced 12” (30,5 cm) on-center
4) Rain Bird XFD-09-18; 0.9 GPH (3,4 lph) emitters spaced 18” (45,7 cm) on-center

b. Available Rain Bird XFDP On-Surface Dripline model numbers for NON-POTABLE water systems; a dual-layered, purple colored dripline tubing with emitter flow rates and spacing as shown:
   1) Rain Bird XFDP-06-12; 0.6 GPH (2,3 lph) emitters spaced 12” (30,5 cm) on-center
   2) Rain Bird XFDP-06-18; 0.6 GPH (2,3 lph) emitters spaced 18” (45,7 cm) on-center
   3) Rain Bird XFDP-09-12; 0.9 GPH (3,4 lph) emitters spaced 12” (30,5 cm) on-center
   4) Rain Bird XFDP-09-18; 0.9 GPH (3,4 lph) emitters spaced 18” (45,7 cm) on-center

c. Required dripline tubing material and performance specifications include:
   1) XFD tubing; dual-layered, brown in color, conforming to an outside diameter (O.D.) of 0.634 inches (16 mm) and an inside diameter (I.D.) of 0.536 inches (13,6 mm) and wall thickness of 0.049 inches (1,2 mm)
   2) XFDP tubing; dual-layered, purple in color, conforming to an outside diameter (O.D.) of 0.634 inches (16 mm) and an inside diameter (I.D.) of 0.536 inches (13,6 mm) and wall thickness of 0.049 inches (1,2 mm)
   3) Factory installed, pressure-compensating, inline emitters welded to the inner circumference of the polyethylene tubing at spacing specified by model number
   4) Inline emitters designed to pressure-compensate by lengthening the emitter’s turbulent flow path (Rain Bird patent pending)
   5) Consistent flow rate from each installed inline emitter when emitter inlet pressure is supplied between recommended operating range of 8.5 to 60 PSI (0,7 to 4,1 bar)
   6) Required filtration for XF Series dripline tubing and emitters is 120 mesh (125 micron)

3. Rain Bird XFCV Dripline with Heavy-Duty Check Valve and pressure-compensating inline emitters.

   a. Available Rain Bird XFCV Dripline with Heavy Duty-Check Valve model numbers for POTABLE water systems; brown colored dripline tubing with emitter flow rates and spacing as shown:

      1) Rain Bird XFCV-06-12; 0.6 GPH (2,3 lph) emitters spaced 12” (30,5 cm) on-center
      2) Rain Bird XFCV-06-18; 0.6 GPH (2,3 lph) emitters spaced 18” (45,7 cm) on-center
      3) Rain Bird XFCV-09-12; 0.9 GPH (3,4 lph) emitters spaced 12” (30,5 cm) on-center
      4) Rain Bird XFCV-09-18; 0.9 GPH (3,4 lph) emitters spaced 18” (45,7 cm) on-center

   b. Required dripline tubing material and performance specifications include:

1) XFCV tubing; dual-layered, brown in color, conforming to an outside diameter (O.D.) of 0.634 inches (16 mm) and an inside diameter (I.D.) of 0.536 inches (13,6 mm) and wall thickness of 0.049 inches (1,2 mm)
2) Inline emitter that includes a 3.5psi check-valve to facilitate 8ft of holdback
3) Factory installed, pressure-compensating, inline emitters welded to the inner circumference of the polyethylene tubing at spacing specified by model number
4) Inline emitters designed to pressure-compensate by lengthening the emitter's turbulent flow path (Rain Bird patent pending)
5) Consistent flow rate from each installed inline emitter when emitter inlet pressure is supplied between recommended operating range of 8.5 to 60 PSI (0,7 to 4,1 bar)
6) Required filtration for XF Series dripline tubing and emitters is 120 mesh (125 micron)

4. Rain Bird XFS Sub-Surface Copper-Colored Dripline with Copper Shield™ Technology and pressure-compensating inline emitters.

a. Available Rain Bird XFS Sub-Surface Copper-Colored Dripline model numbers for POTABLE water systems; dual layered, copper colored dripline tubing with emitter flow rates and spacing as shown:
1) Rain Bird XFS-06-12; 0.6 GPH (2,3 lph) emitters spaced 12" (30,5 cm) on-center
2) Rain Bird XFS-06-18; 0.6 GPH (2,3 lph) emitters spaced 18" (45,7 cm) on-center
3) Rain Bird XFS-09-12; 0.9 GPH (3,4 lph) emitters spaced 12" (30,5 cm) on-center
4) Rain Bird XFS-09-18; 0.9 GPH (3,4 lph) emitters spaced 18" (45,7 cm) on-center

b. Available Rain Bird XFSP Sub-Surface Copper-Colored Dripline model numbers for NON-POTABLE water systems; dual layered purple colored dripline tubing with emitter flow rates and spacing as shown:
1) Rain Bird XFSP-06-12; 0.6 GPH (2,3 lph) emitters spaced 12" (30,5 cm) on-center
2) Rain Bird XFSP-06-18; 0.6 GPH (2,3 lph) emitters spaced 18" (45,7 cm) on-center
3) Rain Bird XFSP-09-12; 0.9 GPH (3,4 lph) emitters spaced 12" (30,5 cm) on-center
4) Rain Bird XFSP-09-18; 0.9 GPH (3,4 lph) emitters spaced 18" (45,7 cm) on-center

c. Dripline tubing material and performance specifications:
1) XFS Copper-colored, dual layered tubing conforming to an outside diameter (O.D.) of 0.634 inches (16 mm) and an inside diameter (I.D.) of 0.536 inches (13,6 mm) and wall thickness of 0.049 inches (1,2 mm)

2) XFSP tubing; dual layered, purple in color, conforming to an outside diameter (O.D.) of 0.634 inches (16 mm) and an inside diameter (I.D.) of 0.536 inches (13,6 mm) and wall thickness of 0.049 inches (1,2 mm)
3) Factory installed, pressure-compensating, inline emitters welded to the inner circumference of the polyethylene tubing at spacing specified by model number
4) Inline XFS Sub-Surface Copper-Colored Dripline emitters include Rain Bird's exclusive Copper Shield™ Technology (patent pending), which protects the emitter from root intrusion with a copper chip and without the use of herbicides made available via supplementary equipment and/or via impregnation into the emitter body. Unlike the use of herbicides which often include EPA-approved handling procedures (as recommended by some manufacturer's of inline emitter products), Rain Bird's Copper Shield™ Technology does not require special handling procedures. Inline emitters are designed to pressure-compensate by lengthening the emitter's turbulent flow path (Rain Bird patent pending)
5) Consistent flow rate from each installed inline emitter when emitter inlet pressure is supplied between recommended operating range of 8.5 to 60 PSI (0,7 to 4,1 bar)
6) Required filtration for XF Series dripline tubing and emitters is 120 mesh (125 micron)

5. Rain Bird XF Series Blank Dripline Tubing

a. Available model numbers for POTABLE water systems:
1) Rain Bird XFD blank tubing, dual-layered and brown in color.

b. Available model numbers for NON-POTABLE water systems:
1) Rain Bird XFDP blank tubing, dual-layered and purple in color.

6. Rain Bird Easy Fit Dripline Tubing Compression Fittings

a. Available model numbers, designed for compatibility with Rain Bird XF Series Dripline Tubing:
1) Tee: MDCFTEE
2) Coupling: MDCFCOUP
3) Elbow: MDCFEL
4) Adapters:
a) 1/2" (13 mm) Male pipe thread adapter: MDCF50MPT
b) 3/4" (19 mm) Male pipe thread adapter: MDCF75MPT
c) 1/2" (13 mm) Female pipe thread adapter: MDCF50FPT
d) 3/4" (19 mm) Female pipe thread adapter: MDCF75FPT
e) 3/4" (19 mm) Female hose thread adapter: MDCF75FHT
5) Flush Cap end closure for POTABLE system: MDCFCAP
6) Flush Cap end closure for NON-POTABLE system: MDCFPCAP

b. Easy Fit compression fitting material and performance specifications include:

1) Easy Fit directional fittings and flush cap fittings constructed from molded UV-resistant ABS material with Buna-N rubber seal for long-term, leak free connections
2) Easy Fit adapters constructed from UV-resistant ABS materials for use exclusively with Easy Fit Compression Fittings
3) Easy Fit Compression Fittings are intended for use with polyethylene tubing from .630" to 669" (16 mm-17 mm) OD to provide a leak-free compression fit
4) Maximum pressure loss for the Easy Fit adapters estimated to be 0.1 PSI (0,007 bar) per adapter
5) Operating pressure range for Easy Fit compression fittings and adapters is 0 to 60 PSI (0 to 4,1 bar)

(or)

7. Rain Bird XF Series Dripline Tubing Insert Fittings

a. Available model numbers, designed for compatibility with Rain Bird XF Series Dripline Tubing:
1) Tee: XFF-TEE insert tee (17 x17 x 17 mm)
2) Coupling: XFF-COUP insert coupling (17 x 17 mm)
3) Elbow: XFF-ELBOW insert elbow (17 x 17 mm)
4) Cross: XFD-CROSS insert cross (17 x 17 x 17 x 17 mm)
5) Insert Adapters:
a) 1/2” (13 mm) Male pipe thread adapter: XFF-MA-050 [17 mm x 1/2” (13 mm) MPT]
b) 3/4” (19 mm) Male pipe thread adapter: XFF-MA-075 [17 mm x 3/4” (19 mm)MPT]
c) 3/4” (19 mm) Female pipe thread adapter: XFD-FA-075 [17 mm x 3/4” (19 mm)FPT]
d) 1/2” (13 mm) Tee male pipe thread adapter: XFF-TMA-050 [17 mm x 1/2” (13 mm)MPT x 17 mm]
e) 3/4” (19mm) Tee female pipe thread adapter: XFD-TFA-075 [17 mm x 3/4” (19 mm)FPT x 17 mm]

b. XF Series insert fitting specifications and features include:
1) Constructed from black and/or brown acetyl plastic for long-term, leak free connections
2) Intended for use with polyethylene tubing with ID of 0.536” (13,6 mm), including Rain Bird XF Dripline and XF Series Blank Tubing
3) Operating pressure range is 0 to 50 PSI (0 to 3,5 bar)

8. Rain Bird Air Relief Valves.

a. Available model numbers, designed for compatibility with Rain Bird XF Series Dripline Tubing:
1) ARV050 Air Relief Valve; includes 1/2” (13 mm) air relief valve.

C. Rain Bird Point Source Irrigation Emission Devices

1. General Information

a. Provide low-volume point-source emission devices, manufactured by Rain Bird, to efficiently deliver irrigation water at the plant root zone as indicated on construction drawings.

2. Rain Bird Single-outlet Xeri-Bug™ Emitters

a. Available model numbers with self-piercing barb inlet:
   1) XB-05PC (Blue); 0.5 GPH (1,89 lph)
   2) XB-10PC (Black); 1.0 GPH (3,79 lph)
   3) XB-20PC (Red); 2.0 GPH (7,57 lph)

b. Available model numbers with 10-32 threaded inlet:
   1) XB-05PC-1032 (Blue); 0.5 GPH (1,89 lph)
   2) XB-10PC-1032 (Black); 1.0 GPH (3,79 lph)
   3) XB-20PC-1032 (Red); 2.0 GPH (7,57 lph)

c. Available model numbers with 1/2” (13 mm) threaded inlet:
   1) XBT-10 (Black); 1.0 GPH (3,79 lph)
   2) XBT-20 (Red); 2.0 GPH (7,57 lph)

d. Single-outlet Xeri-Bug Emitter specifications and features include:
   1) Available with three inlet options:
      a) Self-piercing barb inlet; Emitters with self-piercing barb inlet permit one-step insertion into 1/2” (13 mm) or 3/4” (19 mm) drip tubing when installed with Rain Bird Xeriman tool.
      b) 10-32 threaded inlet; Emitters with 10-32 threaded inlet allow threaded connection into PolyFlex Riser, 1032 Thread Adapter, or 1800 Xeri-Bubbler Adapter
      c) 1/2” (13 mm) threaded inlet; Emitters with 1/2” (13 mm) threaded inlet allow threaded connection into 1/2” (13 mm) PVC male adapter.
   2) External surfaces constructed from UV resistant acetyl materials
   3) Self-flushing to minimize clogging
   4) Color-coded to identify flow rate;
      a) Blue emitter indicates a flow rate of 0.5 GPH (1,89 lph)
      b) Black emitter indicates a flow rate of 1.0 GPH (3,79 lph)
      c) Red emitter indicates a flow rate of 2.0 GPH (7,57 lph)
   5) Pressure-compensating over the pressure range of 15 to 50 PSI (1,0 to 3,5 bar) with consistent flow rate of [0.5 GPH (1,89 lph)] or [1.0 GPH (3,79 lph)] or [2.0 GPH (7,57 lph)] over this pressure range

3. Rain Bird Single-outlet Pressure-Compensating Modules

a. Available model numbers with self-piercing inlet barb:
   1) PC-05: light brown, 5 GPH (18,95 lph)
   2) PC-07: violet, 7 GPH (26,53 lph)

3) PC-10: green, 10 GPH (37,90 lph)
4) PC-12: dark brown, 12 GPH (45,48 lph)
5) PC-18: white, 18 GPH (68,22 lph)
6) PC-24: orange, 24 GPH (90,96 lph)

b. Available model numbers with 10-32 threaded inlet:
1) PC-05 1032: light brown, 5 GPH (18,95 lph)
2) PC-07 1032: violet, 7 GPH (26,53 lph)
3) PC-10 1032: green, 10 GPH (37,90 lph)

c. Available model numbers with ½" FPT inlet:
1) PCT-05: light brown, 5 GPH (18,95 lph)
2) PCT-07: violet, 7 GPH (26,53 lph)
3) PCT-10: green, 10 GPH (37,90 lph)

d. Pressure-Compensating Module specifications and features include:
1) Available with three inlet options:
a) 10-32 threaded inlet; Emitters with 10-32 threaded inlet allow threaded connection into PolyFlex Riser, 1032 Thread Adapter, or 1800 Xeri-Bubbler Adapter

e. Rain Bird PC Diffuser Cap specifications and features include:
1) Available with two color options:
a) PC Diffuser (Black); This Diffuser Cap is to be used for Pressure-Compensating Module zones serviced by a potable water source.
b) PC DIFF-PPL (Purple); This Diffuser Cap is to be used for Pressure-Compensating Module zones serviced by a non-potable water source.
2) Constructed from UV-resistant polyethylene material
3) Capable of snapping onto Rain Bird Pressure-Compensating Modules to create a bubbler effect and prevent wash out

4. Rain Bird Multi-outlet Xeri-Bug Emission Devices

a. Available model numbers with barb inlet:
1) XB-05-6: Blue, 0.5 GPH (1,89 lph/outlet)
2) XB-10-6:Black, 1.0 GPH (3,79 lph/outlet)
3) XB-20-6:Red, 2.0 GPH (7,57 lph/outlet)

b. Available model numbers with 1/2" (13 mm) female threaded inlet:
1) XBT-05-6: Blue, 0.5 GPH (1,89 lph/outlet)
2) XBT-10-6:Black, 1.0 GPH (3,79 lph/outlet)
3) XBT-20-6:Red, 2.0 GPH (7,57 lph/outlet)

5. Rain Bird 6-outlet Manifold Emission Device

a. Available model number:
1) EMT-6XERI

b. 6-outlet Manifold specifications and features include:
   1) 1/2” (13 mm) female threaded inlet
   2) Six free-flowing outlet ports, barbed to retain 1/4” (6,4 mm) distribution tubing and sealed by manufacturer with durable plastic caps removable with pliers during installation
   3) Recommended operating pressure range between 15 to 50 PSI (1,0 to 3,5 bar)

6. Rain Bird Multi-Outlet Xeri-Bird™ 8 Emission Device

   a. Available model numbers:
      1) XBD-80: Xeri-Bird™ 8 unit (includes seven removable port plugs) with filter
      2) XBD-81: Xeri-Bird™ 8 unit with eight 1 GPH (3,79 lph) Xeri-Bug (XB-10-PC) emitters factory installed and filter

   b. Xeri-Bird™ 8 specifications and features include:
      1) 1/2” (13 mm) threaded device inlet with union base nut to allow removal of the Xeri-Bird 8 body from riser for easy installation and maintenance
      2) Eight independent ports, each capable of accepting a Rain Bird Xeri-Bug™ emitter or Rain Bird PC Module for independent flows from 0.5 to 24 GPH (1,89 to 90,96 lph), or a self-piercing barb connector (SPB-025) for unrestricted flow
      3) Eight barbed outlet ports mounted on bottom of device capable of securely retaining 1/4” (6,4 mm) distribution tubing
      4) 200 mesh (75 micron) filter, easily serviceable from top of unit.
      5) Capable of being used with retrofit pressure regulator (PRS-050-30) when pressure regulation is required at unit

D. Rain Bird Low Volume Broadcast Irrigation Emission Devices

1. General Information

   a. Provide low-volume broadcast emission devices, manufactured by Rain Bird, to efficiently deliver irrigation water in a short-radius wetting pattern to planting areas as indicated on construction drawings.

2. Rain Bird Xeri-Bubbler™

   a. Available model numbers with 1/4” (6,4 mm)barb inlet:
      1) SXB-180-025; half-circle, 5 streams
      2) SXB-360-025; full-circle, 8 streams
      3) UXB-360-025; full-circle, umbrella

   b. Available model numbers with 10-32 thread inlet:
      1) SXB-180-1032; half-circle, 5 streams
      2) SXB-360-1032; full-circle, 8 streams
      3) UXB-360-1032; full-circle, umbrella

c. Available model numbers with 5” (12,7 cm) spike inlet:
   1) SXB-180-SPYK; half-circle, 5 streams
   2) SXB-360-SPYK; full-circle, 8 streams
   3) UXB-360-SPYK; full-circle, umbrella

d. Xeri-Bubbler™ specifications and features include:
   1) Three inlet connection options:
      a) 10-32 self-tapping thread
      b) 1/4” (6,4 mm) barb
      c) 5” (12,7 cm) spike
   2) Three flow pattern options:
      a) Half-circle with 5 streams
      b) Full-circle with 8 streams
      c) Full-circle umbrella pattern
   3) Flow and radius adjustment capability by turning outer cap
   4) SXB series features flow range of 0 to 13 GPH (0 to 49,2 lph)
   5) UXB series features flow range of 0 to 35 GPH (0 to 132,5 lph)
   6) Operating pressure range between 15 to 30 PSI (1,0 to 2,1 bar)

3. Rain Bird Xeri-Pop™ Micro-Spray

a. Available model numbers:
   1) XP-400X; 4-inch (101,6 mm) pop-up
   2) XP-600X; 6-inch (152,4 mm) pop-up
   3) XP-1200X; 12-inch (304,8 mm) pop-up

b. Xeri-Pop™ Micro-Spray specifications and features include:
   1) 1/4” (6,4 mm) barb inlet located in base of unit for connection to 1/4” (6,4 mm) distribution tubing
   2) Three pop-up height options:
      a) 4-inch (10,16 cm) pop-up
      b) 6-inch (15,24 cm) pop-up
      c) 12-inch (30,5 cm) pop-up
   3) Compatible with the following Rain Bird nozzles:
      a) Multi-port Series nozzles
      b) 5-series MPR plastic nozzles
      c) 5-series plastic bubbler nozzle (use in conjunction with Rain Bird PCS-series pressure compensating screen)
      d) 8-series MPR plastic nozzles
   4) External body construction using UV-resistant ABS material
   5) Self-flushing, pressure-activated wiper seal
   6) Operating pressure range between 20 to 50 PSI (1,4 to 3,5 bar). Optimum performance achieved with 40 PSI (2,8 bar) pressure regulator.

4. Rain Bird Xeri-Sprays™

a. Available model numbers:
   1) XS-090; Quarter-circle, spray pattern
   2) XS-180; Half-circle, spray pattern

3) XS-360; Full-circle, stream spray pattern
4) 360 ADJMST; Full-circle spray

b. Xeri-Spray™ specifications and features include:
1) 10-32 self-tapping threaded inlet
2) Four flow pattern options:
a) Quarter-circle spray pattern
b) Half-circle spray pattern
c) Full-circle spray pattern
d) Full-circle mister
3) Operating pressure range between 10 to 30 PSI (0,75 to 2,1 bar)
4) Adjustable flow and radius with integral ball valve
a) Flow adjustability between 0 to 31 GPH (0 to 117,3 lph)
b) Radius adjustability for full-circle sprays between 0 to 13.4 feet (0 to 4,1 m)
c) Radius adjustability for part-circle sprays between 0 to 10.6 feet (0 to 3,2 m)

E. Rain Bird Drip Irrigation Accessories

1. 1/4" (6,4 mm) Barb Transfer Fittings

a. Available model numbers:
1) XBF1CONN:1/4" (6,4 mm) Barb Connector
2) XBF2EL: 1/4" (6,4 mm) Barb x Barb Elbow
3) XBFTEE: 1/4" (6,4 mm) Barb x Barb Tee

b. 1/4" (6,4 mm) Barb Transfer Fittings specifications and features include:
1) Three fitting configurations:
a) Connector
b) Elbow
c) Tee
2) Designed for connections of Rain Bird XQ 1/4" (6,4 mm) distribution tubing with an ID of 0.17" (4,3 mm)
3) Barbed on one end to permit easy insertion into any 1/2" (13 mm) or 3/4" (19 mm) polyethylene tubing using a Rain Bird Xeriman® tool (XM-TOOL)
4) Constructed from UV resistant acetyl.
5) Operating pressure range between 0 to 50 PSI (0 to 3.5 bar)

2. Rain Bird Diffuser Bug Cap

a. Available model numbers:
1) DBC-025 (Black); for potable water source
2) DBC-025-PPL (Purple); for non-potable water source

b. Diffuser Bug Cap specifications and features include:
1) Barb inlet designed to fit into 1/4" (6,4 mm) distribution tubing with ID of 0.16" (4 mm)

2) Flanged shield designed to diffuse water to minimize soil erosion at emission point
3) Constructed from polyethylene material
4) Operating pressure range between be 0 to 50 PSI (0 to 3,5 bar)

PART 3 – EXECUTION

3.01 INSPECTIONS AND REVIEWS

A. Pre-construction Site Inspection

1. Verify construction site conditions and note irregularities affecting work of this section. Report irregularities in writing to Owner's Representative prior to beginning work. Commencement of work implies acceptance of existing site conditions.

B. Utility Locates ("Call Before You Dig")

1. Arrange and coordinate Utility Locates with local authorities prior to construction.

2. Repair underground utilities that are damaged during construction. Make repairs at no additional cost to contract price.

3.02 DRIPLINE LAYOUT OF WORK

A. Stake out dripline irrigation system. Items staked include manifold/header pipe and tubing, sleeves, control zone assemblies, flush valves, air relief valves, and check valves.

B. Dripline Irrigation System Layout Review: Dripline irrigation system layout review will occur after staking has been completed. Notify Owner's Representative one week in advance of review. Modifications will be identified by Owner's Representative at this review.

3.03 DRIPLINE EXCAVATION, TRENCHING, AND BACKFILL

A. Excavate and install pipes at minimum cover indicated in drawings or specifications. Excavate trenches at appropriate width for connections and fittings.

B. Minimum cover for dripline components (distance from top of pipe to finish grade):

1. Buried PVC manifold and supply header pipe to dripline grid layouts: 12" (30,5 cm) to top of pipe.

2. Buried dripline lateral pipe downstream PVC manifold and supply header pipe: 4" (10 cm) to top of pipe

3. On-grade dripline lateral pipe downstream PVC manifold and supply header pipe: Secure to finish grade with approved tubing stakes. Install and test prior to installation of landscape fabric and mulch.

C. Backfill only after buried lines have been reviewed, tested, and approved.

D. Excavated material is generally satisfactory for backfill. Use backfill free from rubbish, vegetable matter, frozen materials**,** and stones larger than 2” (50 mm) in maximum diameter. Remove material not suitable for backfill. Use backfill free of sharp objects next to pipe.

E. Dress backfilled areas to original grade. Incorporate excess backfill into existing site grades. Dispose of excess backfill off site.

F. Contact Owner’s Representative for trench depth adjustments where utilities conflict with irrigation trenching and pipe work.

3.04 ASSEMBLING PIPE AND FITTINGS

A. General:

1. Keep pipe free from dirt and debris. Cut pipe ends square, debur and clean as recommended by pipe manufacturer.

2. Keep ends of assembled pipe capped. Remove caps only when necessary to continue assembly.

B. PVC Pipe and Fittings:

1. Use only strap-type friction wrenches for threaded plastic pipe.

2. PVC Solvent Weld Pipe and Fittings:

a. Use appropriate primer and solvent cement. Join pipe in manner recommended by pipe and fitting manufacturers and in accordance with accepted industry practices.

b. Cure for thirty (30) minutes before handling and twenty-four (24) hours before pressurizing or installing with vibratory plow.

c. Snake pipe from side to side within trench.

3. PVC Threaded Connections:

a. Use only factory-formed threads. Field-cut threads are not permitted.

b. Apply thread sealant in manner recommended by component, pipe and sealant manufacturers and in accordance with accepted industry practices.

C. Dripline Tubing and Fittings:

1. Use only Rain Bird XF-Series Insert Fittings or Rain Bird Easy Fit Compression Fittings for Rain Bird XF-Series dripline tubing connections or transitions as recommended by the Manufacturer's representative for the specific site and system conditions.

2. Dripline Insert Fittings:

a. Install dripline tubing and fittings in manner recommended by manufacturer and in accordance with accepted industry practices.

3. Dripline Compression Fittings:

a. Install dripline tubing and fittings in manner recommended by manufacturer and in accordance with accepted industry practices.

3.05 INSTALLATION OF DRIPLINE IRRIGATION COMPONENTS

A. Control Zone Kit Assembly:

1. Flush mainline pipe before installing Control Zone Kit assembly.

2. Locate where shown on drawings. Connect control wires to remote control valve wires using specified wire connectors and waterproof sealant. Provide connectors and sealant per manufacturer's recommendations.

3. Install a maximum of four (4) Low Flow or Medium Flow Control Zone Kits per standard rectangular valve box. Install a maximum of one (1) Medium Flow Commercial Control Zone Kits per standard rectangular valve box. Install a maximum of one High Flow Commercial Control Zone Kits per jumbo rectangular valve box.

a. Locate valve boxes at least 12" (30,5 cm) from, and align with, nearby walls or edges of paved areas.

b. Group Control Zone Kit assemblies together where practical. Align grouped valve boxes in uniform patterns. Allow at least 12" (30,5 cm) between valve boxes.

c. Brand controller letter and station numbers on valve box lid in 2" (50 mm) high letters.

B. Lateral Piping and Dripline Tubing:

1. Install lateral piping and dripline tubing at locations and in grid patterns as indicated on drawings and installation details, and in strict accordance with manufacturer recommendations.

2. Thoroughly flush PVC lateral piping, supply headers, and dripline tubing immediately upon installation.

C. Air Relief Valve Kit Assembly: Install at all high points in dripline tubing grid as shown and directed on drawings and installation details.

D. Flush Point Assembly: Install in flush header or at ends of each dripline zone segment as shown and directed on drawings and installation details. Install at least 12-inches from and align with adjacent walls or edges of paved areas.

3.06 PROJECT RECORD (AS-BUILT) DRAWINGS

A. Document field changes from original design and construction documents. Maintain on-site and separate from original construction documents, one complete set of documents labeled “Project Field Documents”. Keep documents current. Do not permanently cover work until accurate “as-built” information is recorded.

B. Record pipe network alterations on a daily basis. Record work that is installed differently than shown on construction documents. Record accurate reference dimensions, measured from at least two permanent reference points, of each control zone kit assembly, each dripline zone boundary, each air relief valve assembly, each flush point assembly, and other dripline irrigation components enclosed within valve box.

C. Obtain from Owner’s Representative one set of reproducible Mylar drawings or CAD files prior to construction completion. Duplicate information contained on “Project Field Documents” maintained on-site using technical drafting pen or AutoCAD. Label each sheet "Record Drawing".

D. Provide “Record Drawings” to Owner’s Representative. Completion of Record Drawings is required prior to final construction review at completion of irrigation system installation.

3.07 WINTERIZATION AND SPRING START-UP

A. Winterize irrigation system in fall following completion, or partial completion, of irrigation system construction. Start-up irrigation system in spring following completion, or partial completion, of irrigation system construction. Repair any damage caused in improper winterization at no additional cost to Owner. Coordinate winterization and start-up with landscape maintenance personnel.

3.08 MAINTENANCE

A. Maintain irrigation system for duration of 30 calendar days from formal written acceptance by Owner's Representative. Make periodic examinations and adjustments to irrigation system components in order to achieve the most efficient and uniform application of water.

B. Following completion of Contractor's maintenance period, Owner will be responsible for maintaining system in working order during remainder of guarantee/warranty period, for performing necessary minor maintenance, for protecting against vandalism, and for preventing damage after landscape maintenance operation.

3.09 CLEANUP

A. Remove from site machinery, tools, excess materials, and rubbish upon completion of work.

END OF SECTION

03/04/2014

SECTION 02821

CHAIN LINK FENCING

PART 1 - GENERAL

1.1 SUMMARY:

1.1.1 Section Includes: Chain link fencing, including gates, fittings and hardware; also includes windscreen for pickle ball court..

1.1.2 Related Documents: The Conditions of the Contract and Division 1 apply to this section as fully as if repeated herein.

1.2 DESCRIPTION OF FENCE SYSTEMS:

1.2.1 Type A Fencing: Fencing with a fabric height of 72 inches and top rail and bottom tension wire. Post shall be fitted with post tops.

1.3 REFERENCES:

The editions of the specifications and standards referenced herein, published by the following organizations, apply to the construction only to the extent specified by the reference. Refer to Section 01422 for information concerning availability and use of references.

American Society for Testing and Materials (ASTM)
Chain Link Fence Manufacturers Institute (CLFMI)

1.4 SUBMITTALS:

1.4.1 Product Data: Submit manufacturer's technical data, specifications, and installation instructions.

1.4.2 Shop Drawings: Submit shop drawings showing layout with post spacings and details illustrating fence height, location and sizes of posts, rails, braces, gates, hardware, anchorage details.

1.4.3 Samples: Manufacturer's color charts or 6-inch lengths of actual units showing the full range of colors available for components with factory-applied color finishes.

1.4.4 Submittal procedures and quantities are specified in Division 1.

1.5 QUALITY ASSURANCE:

1.5.1 Regulatory Requirements: Provide fences and gates meeting the accessibility requirements of the 2010 California Building Code (CBC) Title 24 Part 2 Chapter 11 - Accessibility; and ADA Accessibility Guidelines for Buildings and Facilities, dated June 26, 1991 as amended April 5, 1993 and January 18, 1994, and July 2004.

PART 2 - PRODUCTS

2.1 FENCE FABRIC:

2.1.1 Steel Fabric: Comply with CLFMI Product Manual. Furnish one-piece fabric widths for fencing up to 12 feet high. Wire size includes zinc coating.

2.1.2 Salvage: Fabric 72 inches high and over and with 2 inch mesh shall be knuckled at one salvage and twisted at the other; all mesh 60 inches high and under shall be knuckled at both salvages.

2.1.3 Fabric for Fencing: Woven in a 2 inch mesh from 9 gage zinc coated steel wire.

2.1.4 Galvanized Steel Finish: ASTM A 392, Class 2, with not less than 2 ounces zinc per square foot of uncoated wire surface.

2.2 FRAMING:

2.2.1 Materials: Provide one of the following:

.1 Type I Pipe: Hot-dipped galvanized steel pipe meeting the requirements of ASTM F 1083, plain ends, standard weight (schedule 40) with not less than 1.8 ounces zinc per square foot of surface area.

.2 Type II Pipe: Manufactured from steel meeting the requirements of ASTM A 569 or ASTM A 653, cold formed, electric welded with minimum yield strength of 50,000 psi and triple coated with minimum 0.9 ounces zinc per square foot after welding, a chromatic conversion coating and a clear acrylic polymer overcoat. Subject to compliance with requirements, available products that may be incorporated in the Work include, but are not limited to, the following or equal:

Allied Tube and Conduit Corp.; Type SS-40
American Tube Co., Inc.; Tuf-40

.3 Square Tubing: Fabricated from steel meeting the requirements of ASTM A 500-93, grade B and hot dip galvanized with minimum 2 ounces zinc per square foot of surface area meeting the requirements of ASTM A 123. Subject to compliance with requirements, manufacturers offering products that may be incorporated in the Work include, but are not limited to, the following or equal:

Cyclone Fence Div. of U.S. Steel Co.
Anchor Fence, Inc.

.4 C Section: Roll-formed steel shapes meeting the requirements of ASTM F 669, group II produced from steel meeting the requirements of ASTM A 653, or ASTM A 570, grade 45, cold formed, hot-dip galvanized with minimum 2 ounces zinc per square foot of surface area meeting the requirements of ASTM A 123 or ASTM A 653.

.5 H Section: Hot-roll steel H shape with minimum yield strength of 45,000 psi meeting the requirements of ASTM F 669, group III and hot-dip galvanized with minimum 2 ounces zinc per square foot of surface area meeting the requirements of ASTM A 123.

2.2.2 End, Corner and Pull Posts:

.1 Fabric heights of 6 feet or less, provide one of the following:

a. Type I Steel Pipe: 2.375 inch O.D. weighing 3.65 pounds per lineal foot.

b. Type II Steel Pipe: 2.375 inch O.D. weighing 3.12 pounds per lineal foot.

c. Square Tubing: 2.00 inch square weighing 2.60 pounds per lineal foot.

d. Roll-formed Sections: 3-1/2" by 3-1/2" weighing 4.85 pounds per lineal foot.

.2 Fabric heights over 6 feet, provide one of the following:

a. Type I Steel Pipe: 2.875 inch O.D. weighing 5.79 pounds per lineal foot.

b. Type II Steel Pipe: 2.875 inch O.D. weighing 4.64 pounds per lineal foot.

c. Square Tubing: 2.50 inch square weighing 5.10 pounds per lineal foot.

2.2.3 Line or Intermediate Posts:

.1 Fabric heights of 6 feet or less, provide one of the following:

a. Type I Steel Pipe: 1.90 inch O.D. weighing 2.72 pounds per lineal foot.

b. Type II Steel Pipe: 1.90 inch O.D. weighing 2.28 pounds per lineal foot.

c. Roll-formed C Sections: 1.875" by 1.625" weighing 2.28 pounds per lineal foot.

d. Roll-formed H Sections: 2.25" by 1.70" weighing 3.26 pounds per lineal foot.

.2 Fabric heights over 6 feet, provide one of the following:

a. Type I Steel Pipe: 2.375 inch O.D. weighing 3.65 pounds per lineal foot.

b. Type II Steel Pipe: 2.375 inch O.D. weighing 3.12 pounds per lineal foot.

c. Roll-formed C Sections: 2.25" by 1.70" weighing 2.70 pounds per lineal foot.

d. Roll-formed H Sections: 2.25" by 1.70" weighing 3.26 pounds per lineal foot.

2.2.4 Gate Posts:

.1 Gate leaves up to 6 feet wide provide one of the following:

a. Type I Steel Pipe: 2.875 inch O.D. weighing 5.79 pounds per lineal foot.

b. Type II Steel Pipe: 2.875 inch O.D. weighing 4.64 pounds per lineal foot.

c. Square Tubing: 2.50 inch square weighing 5.10 pounds per lineal foot.

d. Roll-formed Sections: 3-1/2" by 3-1/2" weighing 4.85 pounds per lineal foot.

2.2.5 Top Rails and Braces: Provide one of the following:

.1 Type I Steel Pipe: 1.66 inch O.D. weighing 2.27 pounds per lineal foot.

.2 Type II Steel Pipe: 1.66 inch O.D. weighing 1.84 pounds per lineal foot.

.3 Roll-formed C Sections: 1.625" by 1.25" weighing 1.35 pounds per lineal foot.

2.3 FITTINGS AND ACCESSORIES:

2.3.1 Material: Meet the requirements of ASTM F 626, galvanized iron or steel, zinc coated in accordance with ASTM A 153, with zinc weights per Table I.

2.3.2 Tension Wire: 0.177 inch diameter steel marcelled tension wire meeting the requirements of ASTM A 824, Type II, Class 2.

2.3.3 Tie Wires: 12 gage galvanized steel with a minimum of 0.80 ounce per square foot of zinc coating of surface area meeting the requirements of ASTM A 641, Class 3.

2.3.4 Post Brace Assembly: Manufacturer's standard adjustable brace at end and gate posts and at both sides of corner and pull posts, with horizontal brace located at mid-height of fabric. Use same material as top rail for brace, and truss to line posts with 3/8 inch diameter rod and adjustable tightener. Provide manufacturers standard galvanized steel or cast iron cap for each end.

2.3.5 Bottom and Center Rail: Same material as top rail. Provide manufacturer's standard galvanized steel or cast iron cap for each end.

2.3.6 Post and Line Tops: Weather tight pressed steel not lighter than 14 gage, wrought iron or malleable iron with openings to accommodate top rail or tension wire where required.

2.3.7 Tension and Stretcher Bars: Hot-dip galvanized steel with minimum length 2 inches less than full height of fabric, minimum cross-section of 3/16" by 3/4" and minimum 1.2 ounce zinc coating per square foot of surface area. Provide one bar for each gate and end post, and 2 for each corner and pull post, except where fabric is integrally woven into post.

2.3.8 Tension and Brace Bands: Minimum 3/4 inch wide hot-dip galvanized steel with minimum 1.2 ounce zinc coating per square foot of surface area.

.1 Tension Bands: Minimum 14 gage thick.

.2 Tension and Brace Bands: Minimum 12 gage thick.

2.4 GATES:

2.4.1 Fabricate perimeter frames of gates from metal and finish to match fence framework. Assemble gate frames by welding. Provide horizontal and vertical members to ensure proper gate operation and attachment of fabric, hardware, and accessories with additional horizontal and vertical members to insure proper gate operation.

2.4.2 Use same fabric as for fence, installed with stretcher bars and bands at vertical edges and at top and bottom edges.

2.4.3 Install diagonal cross bracing consisting of 3/8 inch diameter truss rods with drop forged steel turnbuckles where necessary to insure frame rigidity without sag or twist.

2.4.4 Swinging Gates: Meet the requirements of ASTM F 900.

.1 Gate leaves 6 feet or less high and 8 feet or less wide, fabricate of one of the following:

a. Type I Steel Pipe: 1.660 inch O.D. weighing 2.27 pounds per lineal foot.

b. Type II Steel Pipe: 1.660 inch O.D. weighing 1.84 pounds per lineal foot.

c. Square Tubing: 1.50 inch square weighing 1.90 pounds per lineal foot.

.2 Gate leaves over 6 feet high and over 8 feet wide, fabricate of one of the following:

a. Type I Steel Pipe: 1.90 inch O.D. weighing 2.72 pounds per lineal foot.

b. Type II Steel Pipe: 1.90 inch O.D. weighing 2.28 pounds per lineal foot.

c. Square Tubing: 2.00 inch square weighing 2.60 pounds per lineal foot.

.3 Gate Hardware:

a. General: Hardware shall comply with local Fire Authority, 2010 California Building Code (CBC) Title 24 Article 1004 and 1017; and California Fire Code (CFC) Article 1208.

b. Hinges: Manufacturer's standard non-lift-off type, offset to permit 180 degree gate opening.

c. Latch: Fork type or plunger bar type to permit operation from either side of gate by means of lever handles, and incorporating a padlock eye as integral part of latch. Latch shall be mounted 40 inches above finish grade. Comply with California Fire Code (CFC) Article 1208.

.4 Double Gates: Provide gate stops set in concrete to engage center drop rod or plunger bar. Include locking device and padlock eyes as integral part of latch, permitting both gate leaves to be locked with single padlock.

.5 Gates in Path of Travel: Provide a sign at all gates in path of travel with the following wording: “GATE IS TO REMAIN LOCKED IN THE OPEN POSITION DURING PARK OPERATION HOURS OR DURING ANY PUBLIC FUNCTIONS”. Construct sign panels of 20 gage minimum hot-dip galvanized steel sheet or 0.050 inch thick aluminum sheet, with rounded corners. Clean and prepare surfaces to assure maximum paint

adhesion and paint with reflectorized porcelain enamel. Apply working using the silk screen process.

2.5 WINDSCREENS:

2.5.1 Provide standard 6'-0" windscreen brass grommets every 12" on entire perimeter, and wind relief cuts; as manufactured by AmCraft Manufacturing or City approved equal. Color to be selected by the City from manufacturer's standard colors.

.1 Measuring for Windscreen: Measure from one stretcher bar to the other stretcher bar or up to 60 feet. Subtract 4 inches from that number to allow for air flow and tightening.

PART 3 - EXECUTION

3.1 EXAMINATION:

Examine the conditions under which fencing is to be installed. Do not proceed with construction until unsatisfactory conditions have been corrected.

3.2 INSTALLATION:

3.2.1 General: Install fence in accordance with ASTM F 567. Do not begin installation before final grading is completed.

.1 At boundary line fencing, apply fabric to outside of framework. Install fencing on boundary lines inside of property line established by survey.

3.2.2 Post Spacing: Space posts not to exceed 10 feet on center. Provide corner posts at all changes of direction exceeding 15 degrees. Provide end posts at ends of runs and gate posts on both sides of gates. Provide pull posts as necessary to limit spacing between end, corner, gate and pull posts to 500 feet.

3.2.3 Excavation: Excavate line post holes minimum 10 inch diameter and to a depth approximately 3 inches lower than post bottom, with bottom of posts set not less than 30 inches below grade. Excavate corner, end, pull and gate post holes minimum 12 inch diameter and to a depth approximately 3 inches lower than post bottom, with bottom of posts set not less than 36 inches below grade.

3.2.4 Setting Posts: Center and align posts in holes 3 inches above bottom of excavation. Place concrete around posts and vibrate or tamp for consolidation. Finish concrete 1 inch above grade, slope away from post for drainage.

3.2.5 Top Rails: Run continuously through post caps, bending to radius for curved runs. Provide expansion couplings spaced not to exceed as recommended by fencing manufacturer.

3.2.6 Center Rails: Provide center rails where indicated. Install in one piece between posts and flush with post of fabric side, using rail ends and special offset fittings where necessary.

3.2.7 Brace Assemblies: Install braces so posts are plumb when diagonal rod is under proper tension. Furnish bracing assemblies at each end, and gate post and on both sides of corner and pull posts.

3.2.8 Bottom Tension Wire: Install tension wire within 6 inches of bottom of fabric before stretching fabric and tie to each post with not less than same gage and type of wire. Pull wire taut, without sags. Fasten fabric to tension wire with 11 gage hog rings of same material and finish as fabric wire, spaced maximum 24 inches on center.

3.2.9 Top Tension Wire: Install tension wire through post cap loops before stretching fabric and tie to each post cap with not less than same gage and type of wire. Pull wire taut, without sags. Fasten fabric to tension wire with 11 gage hog rings of same material and finish as fabric wire, spaced maximum 24 inches on center.

3.2.10 Fabric: Leave approximately 2 inches between finish grade or top of slab and bottom salvage. Pull fabric taut and tie to posts, rails, and tension wires. Install fabric on security side of fence, and anchor to framework so that fabric remains in tension after pulling force is released.

3.2.11 Tension or Stretcher Bars: Thread through or clamp to fabric 4 inches on center and secure to posts with metal bands spaced 15 inches on center.

3.2.12 Tie Wires: Use U-shaped wire of proper length to secure fabric firmly to posts and rails with ends twisted at least 2 full turns. Bend ends of wire to minimize hazard to persons or clothing.

3.2.13 Gates: Install gates plumb, level, and secure. Install as recommended by fence manufacturer. Adjust hardware for smooth operation and lubricate as required.

3.2.14 Windscreens: Install windscreens according to manufacturer's written instructions, and the following:

.1 The windscreen should be attached so that the hems and seams are toward the fence and the smooth side is facing the court.

.2 All grommets must be utilized for proper installation. Begin by securing one vertical edge at the intended height and its closest horizontal edge. Attach all top grommets, work down the other vertical edge and finish bt attaching at the bottom. If there is a center tape (anti-billowing tab) that should be done last. Do not attach on open ends of fencing.

.3 Tie wraps and cords are used to secure the net to the fence. Pull the wraps tight, but allow a slight drag for movement on windy days. Run the nylon cord in a single line as much as possible.

.4 Attached only to fully formed fence links (diamond shapes), opened links cause windscreen to move or detach.

END OF SECTION

34-003 – 03/04/2014

SECTION 02840

PARKING APPURTENANCES

PART 1 - GENERAL

1.1 SUMMARY:

1.1.1 Section Includes: Furnishing and installing parking appurtenances as indicated and as specified.

1.1.2 Related Documents: The Conditions of the Contract and Division 1 apply to this section as fully as if repeated herein.

1.2 REGULATORY REQUIREMENTS:

Provide signs related to disability requirements which meet the requirements of the 2010 California Building Code (CBC) Title 24 Part 2 Chapter 11 - Accessibility; and ADA Accessibility Guidelines for Buildings and Facilities, dated June 26, 1991 as amended April 5, 1993 and January 18, 1994, and July 2004.

PART 2 - PRODUCTS

2.1 CONCRETE WHEEL STOPS:

2.1.1 Precast concrete using smooth metal forms, minimum 2,000 psi concrete, with two No. 3 horizontal reinforcement bars; 72 inches long unless otherwise indicated, minimum 5 inches high, sides battered, ends battered or vertical, with edges rounded to 3/4 inch radius and drainage slots on underside.

2.1.2 Reinforcing Materials: As specified in Section 03200.

2.1.3 Concrete Materials: As specified in Section 03300.

2.2 ACCESSIBILITY IDENTIFICATION SIGNS:

2.2.1 Sign Panels: Construct sign panels of 20 gage minimum hot-dip galvanized steel sheet or 0.050 inch thick aluminum sheet, with rounded corners. Clean and prepare surfaces to assure maximum paint adhesion and paint with reflectorized porcelain enamel. Apply legends, symbols and borders using the silk screen process.

2.2.2 Posts: Galvanized steel standard weight pipe posts.

2.2.3 Comply with CBC Title 24 Part 2, Chapter 11 and ADA Accessibility Guidelines for Buildings and Facilities, for handicapped accessibility requirements.

2.2.4 Quick Setting Hydraulic Cement: Acceptable products or equal:

The Burke Co.; Burke Plug
Minwax Construction Products Div.; Super Por-Rok
Tamms Industries Co.; Tammstech Rapid Rock
Master Builders; Masterflow 713

PART 3 - EXECUTION

3.1 SETTING WHEEL STOPS:

Secure each wheelstop with two 3/4" by 16" long galvanized steel anchor bolts through prepared holes, one at each end of bumper. Install bolts flush with top of wheel stops. Furnish templates for setting anchor bolts in portland cement concrete paving. Drive anchors through holes in wheel stops into asphaltic concrete paving.

3.2 INSTALLATION OF SIGNS:

Install signs in locations indicated and as required by CBC Title 24 Part 2 and ADA Accessibility Guidelines for Buildings and Facilities. Set posts into pipe sleeve inserts set and anchored into concrete. Fill space between pipe posts and sleeves with quick setting hydraulic cement.

END OF SECTION

34-003 – 01/08/2014

SECTION 02870

SITE FURNISHINGS

PART 1 - GENERAL

1.1 SUMMARY:

1.1.1 Section Includes: Site furnishings.

1.1.2 Related Documents: The Conditions of the Contract and Division 1 apply to this section as fully as if repeated herein.

1.2 REFERENCES:

The editions of the specifications and standards referenced herein, published by the following organizations, apply to the work only to the extent specified by the reference. Refer to Section 01422 for information concerning availability and use of references.

American Concrete Institute (ACI)
American Society for Testing and Materials (ASTM)
Precast Concrete Institute (PCI)

1.3 SUBMITTALS:

1.3.1 Product Data: Show dimensions and cross-section of each item as well as location, size, and type of reinforcement, including reinforcement necessary for safe handling and placement; and details of attachment and other hardware.

.1 Benches
.2 Trash Receptacles
.3 Bicycle Racks
.4 Waste Dog Station

1.3.2 Samples: Submit samples of each color and finish of precast concrete, 12" by 12" size, to illustrate quality, color, and texture of each exposed-to-view surface finish.

1.3.3 Submittal procedures and quantities are specified in Division 1.

1.4 DELIVERY, STORAGE, AND HANDLING:

Handle and store units in a manner that will guard against cracking, chipping, warping, soiling, staining or other physical damage, discoloration, or distortion.

PART 2 - PRODUCTS

2.1 PREFABRICATED FURNISHINGS:

2.1.1 6 Foot Slotted Steel Park Bench: By Anova Furnishings/Coast Recreation

.1 Model No. L1416 In-Ground Mount.

.2 Color: To be determined by City.

2.1.2 Trash Receptacles: By Miracle Recreation

.1 Model No. 1129.

.2 Color: To be determined by City.

2.1.3 Waste Dog Station: By Zero Waste USA, Inc.:

.1 Model No. JJB004.

.2 Color: ZW Green.

2.1.4 5 Loop Bike Rack: By Anova Furnishings/Coast Recreation

.1 Model No. LBR7PING In-Ground Mount.

.2 Color: To be determined by City.

PART 3 - EXECUTION

3.1 INSTALLATION:

3.1.1 Prefabricated Furnishings: Install according to manufacturer's recommendations and according to the Drawings.

END OF SECTION

34-003 –02/24/2014

SECTION 02880

PLAY EQUIPMENT

PART 1 - GENERAL

1.1 SUMMARY:

1.1.1 Section Includes: Exterior play equipment.

1.1.2 Related Documents: The Conditions of the Contract and Division 1 apply to this section as fully as if repeated herein.

1.2 REFERENCES:

The editions of specifications and standards referenced herein, published by the following organizations, apply to the construction only to the extent specified by the reference. Refer to Section 01422 for information concerning availability and use of references.

American Society for Testing and Materials (ASTM)
American Welding Society (AWS)

1.3 SUBMITTALS:

1.3.1 Shop Drawings: Submit shop drawings showing sizes, details of construction, assembly, and other pertinent information. Provide diagrams, templates, and installation instructions as required for the installation of items.

1.3.2 Product Data: Submit manufacturer's literature and brochures, and catalog cuts, showing complete details of all manufactured and fabricated items.

1.3.3 Submittal procedures and quantities are specified in Division 1.

1.4 DELIVERY, STORAGE, AND HANDLING:

Deliver material in time to insure uninterrupted progress of the construction. Store materials in a manner to preclude damage and permit access for inspection and identification. Store steel materials, either plain or fabricated, above the ground upon platforms, pallets, skids, or other supports. Keep materials free from dirt, grease, and other foreign matter, and protect from corrosion. Material showing evidence of damage will be rejected; immediately remove from the site.

1.5 WARRANTY:

1.5.1 100-Year Limited Warranty:

.1 On all PlayBoosterÂ®, PlayShaperÂ® and PlaySenseÂ® aluminum posts, stainless steel fasteners, clamps, beams and caps, against structural failure due to corrosion/natural deterioration or manufacturing defects, and on PlayBooster, Evosâ, and Weevosâ, steel posts and arches against structural failure due to material or manufacturing defects.

1.5.2 15-Year Limited Warranty:

.1 On all plastic components (including TuffTimbersâ, edging), all steel components (except 100-year steel posts), MobiusÂ® climbers, decks and TenderTuffâ, coatings (except Wiggle Ladders, Chain Ladders and Swing Chain) against structural failure due to material or manufacturing defects. TuffTurfÂ® tiles against material or manufacturing defects.

1.5.3 10-Year Limited Warranty:

.1 On concrete products against structural failure due to natural deterioration or manufacturing defects. Does not cover minor chips, hairline cracks or efflorescence.

1.5.4 8-Year Limited Warranty:

.1 On Aeronetâ, climbers and climbing cables against defects in materials or manufacturing defects. On CoolToppersÂ® fabric against failure from significant fading, deterioration, breakdown, mildew, outdoor heat, cold or discoloration. This warranty is limited to the design loads as stated in the specifications found in the technical information.

1.5.5 3-Year Limited Warranty

.1 On all other parts, i.e.: CableCoreÂ® products, swing seats and hangers, grills, Mobius climber handholds, Wiggle Ladders, Chain Ladders and Swing Chain, Track Ride trolleys and bumpers, all rocking equipment including Sway FunÂ® gliders, PVC belting material, HealthBeatâ, hydraulic cylinders, Seesaws, Wiggle Ring Bridge, etc., against failure due to corrosion/natural deterioration or manufacturing defects.

.2 This warranty does not include any cosmetic issues or wear and tear from normal use. It is valid only if the playstructures and/or equipment are erected to conform with Landscape Structures™ installation instructions and maintained according to the maintenance procedures furnished by Landscape Structures Inc. For a full text of the warranty, contact your playground consultant.

PART 2 - PRODUCTS

2.1 PLAY EQUIPMENT – EVOS (5–12 YEARS)

2.2.1 Material: All materials shall be structurally sound and suitable for safe play. Durability shall be ensured on all steel parts by the use of time-tested coatings such as zinc plating, galvanizing, ProShield finish, TenderTuff coating, etc. Colors shall be specified.

2.2.2 Fasteners: Primary fasteners shall be socketed and pinned tamperproof in design, stainless steel (SST) per ASTM F879 unless otherwise indicated (see specific product installation/specifications). All primary fasteners shall include a locking patch-type material that will meet the minimum torque requirements of IFI-125. Manufacturer to provide special tools for pinned tamperproof fasteners.

2.2.3 TenderTuff Coating: Metal components to be TenderTuff-coated shall be thoroughly cleaned in a hot phosphatizing pressure washer, then primed with a water-based thermosetting solution. Primed parts shall be preheated prior to dipping in UV-stabilized, liquid polyvinyl chloride (PVC), then salt cured at approximately 400 degrees. The finished coating shall be approximately .080" thick at an 85 durometer with a minimum tensile strength of 1700 PSI and a minimum tear strength of 250 pounds/inch. Four standard colors are available all with a matte finish. (Brown only for HealthBeat). Not applicable for Evos.

2.2.4 ProShield Finish: All metal components with ProShield finish shall be thoroughly cleaned and phosphatized through a five-stage power washer. Parts are then thoroughly dried, preheated and processed through a set of automatic powder spray guns where a minimum .002" of epoxy primer is applied. A minimum .004” of architectural-grade Super-Durable polyester TGIC powder is applied. The average ProShield film thickness is .006".

.1 ProShield is formulated and tested per the following ASTM standards. Each color must meet or exceed the ratings listed below:

a. Hardness: (D3363) rating 2H
b. Flexibility: (D522) pass 1/8" mandrel
c. Impact (D2794) rating minimum 80 inch-pounds
d. Salt Fog Resistance (B117 and D1654) 4,000 hours and rating 6 or greater
e. UV Exposure (G154, 340 bulb) 3,000 hours, rating delta E of 2, and 90 percent gloss retention
f. Adhesion (D3359, Method B) rating 5B

.2 The Paint Line shall employ a "checkered" adhesion test daily.

2.2.5 Rotationally Molded Polyethylene Parts: These parts shall be molded using prime compounded linear low-density polyethylene with a tensile strength of 2500 psi per ASTM D638 and with color and UV-stabilizing additives. Wall thickness varies by product from .187" (3/16") to .312" (5/16"). Colors to be selected by City.

2.2.6 Footings: Unless otherwise specified, the bury on all footings shall be 34" below Finished Grade (FG) on all in-ground play events/posts. Other types of anchoring are available upon request.

2.2.7 Hardware Packages: All shipments shall include individual component-specific hardware packages. Each hardware package shall be labeled with the part number, description, a component diagram showing the appropriate component, package weight, a bar code linking the hardware package to the job number, assembler's name, date and time the package was assembled, work center number, and work order number.

2.2.8 Installation Documentation: All shipments shall include a notebook or packet of order-specific, step-by-step instructions for assembly of each component, including equipment assembly diagrams, estimated hours for assembly, footing dimensions, concrete quantity for direct bury components, fall height information, area required information and detailed material specifications.

2.2.9 Packing List: All shipments shall include a packing list for each skid/container, specifying the part numbers and quantities on each skid or within each container.

2.2.10 Packaging: PlayBooster posts shall be individually packaged in sturdy, water-resistant, mar-resistant cardboard boxes. Other components shall be individually wrapped or bulk wrapped to provide protection during shipment. Small parts and hardware packages will be placed in crates for shipment. The components and crates are then shrink-wrapped to skids (pallets) to ensure secure shipping.

2.2.11 Maintenance Kit: An order-specific maintenance kit shall be provided for each structure order. The kit will include a notebook or packet with a second set of installation documents and order-specific maintenance documentation with recommendations on how often to inspect, what to look for and what to do to keep the equipment in like-new condition. The kit also includes touch-up primer, appropriate color touch-up paint, sandpaper, appropriate color touch-up PVC, graffiti remover and additional installation tools for the tamperproof fasteners.

2.2.12 (EV) Evos General Specifications:

.1 5" Arches: All steel arches are ProShield finished and manufactured from 5" O.D. galvanized tubing with a wall thickness of .120".

.2 Steel Arch Mechanical Properties:

a. Yield Strength (min): 50,000 PSI
b. Tensile Strength (min): 55,000 PSI
c. % Elongation in 2 inches: 25
d. Modulus of Elasticity: 29.5 x 1,000,000 PSI

.3 5" Clamps: All clamps are ProShield finished and, unless otherwise noted, shall be sand cast using a 356-T6 aluminum alloy and having the following mechanical properties:

a. Ultimate Tensile: 35,000 PSI
b. Yield Strength: 18,000 PSI
c. Elongation: 8% in 2 inches

.4 Fasteners: Primary fasteners shall be socketed and pinned tamperproof in design, stainless steel (SST) per ASTM F 879 unless otherwise indicated (see specific product installation/specifications).

.5 Corocord-cableR: Comprised of six-stranded and tempered Corocord-cable with a polypropylene core. The galvanized steel wire cores of the six strands are heated and covered with polyamide, black in color.

.6 Polyester Powdercoating: All metal components to be powdercoated shall be free of excess weld spatter. Parts shall be thoroughly cleaned in a 5-Stage Pretreatment process. Parts are then thoroughly dried and proceed through a set of automatic sprayers that apply electrostatic powdercoat. Parts are oven cured at 400 degrees F. The average powdercoat thickness is .004". Super Durable TGIC polyester powder shall be specially formulated for optimum Ultra Violet (UV) stability and gloss retention. It shall meet or exceed ASTM Standards for:

a. Hardness (D-3363)
b. Impact (D-2794)
c. Salt Spray resistance (B-117 and D-654)
d. UV Exposure (G-54)
e. Adhesion (D-3359, Method B)
f. The Paint Line shall employ a "checkered" adhesion test daily.

.7 Rotationally Molded Poly Parts: These parts shall be molded using prime compounded linear low-density polyethylene with a tensile strength of 2500 psi per ASTM D638 and with color and UV-stabilizing additives. Wall thickness varies by product from .187" (3/16") to .312" (5/16").

2.2.13 156450A - Swiggle Stix DB Only

.1 Cable Assy.: (Cable) Made of tightly woven polyester-wrapped, six-stranded galvanized-steel cable with a polypropylene core. (Cable Connectors) 6063-T6 aluminum.

.2 Chain: Steel 1/4" straight link chain, 3,150 lb (1428,82 kilograms). working load limit. Finish: Peer Gold.

.3 Ball Clamp/Ball Retainer: Cast from 356-T6 Aluminum. Finish: ProShield, color specified.

.4 Fasteners: Primary fasteners shall be socketed and pinned tamperproof in design, stainless steel (SST) per ASTM F 879 unless otherwise indicated (see specific product installation/specifications).

.5 Support: Fabricated from 2.375" O.D. RS20 (.095"-.105") wall galvanized steel tubing. Finish: ProShield, color specified.

.6 Footer (DB): Weldment comprised of 1.660" O.D. RS20 (.085"-.095") galvanized steel tubing and 3/16" HRPO sheet steel. Finish: ProShield, color specified.

.7 E-Pod Rotationally molded from U.V. stabilized linear low density polyethylene, color specified.

.8 Pod: Rotationally molded from U.V. stabilized linear low density polyethylene, color specified.

.9 Pod Bolt Plate: Weldment consists of 3/16" HRPO steel plate and 3/8" thick HRPO steel plate. Finish: ProShield, color specified.

.10 Pod Climb Across: Weldment comprised of 2.375" O.D. RS20 (.095"-.105") wall galvanized steel tubing, 3/8" thick HRPO steel plate, and 1 7/8" steel ball. Finish: ProShield, color specified.

2.2.14 156449A - Helix Net DB Only Between Two Arches

.1 Net Railing: Weldment comprised of 2.375" O.D. RS40 (.130"-.140") wall galvanized steel tubing, 1.900" O.D. RS20 (.090"-.100") wall galvanized steel tubing, 3/8" thick HRPO steel plate and 1 7/8" steel ball. Finish: ProShield, color specified.

.2 Ball Clamp/Ball Retainer: Cast from 356-T6 Aluminum. Finish: ProShield, color specified.

.3 Fasteners: Primary fasteners shall be socketed and pinned tamperproof in design, stainless steel (SST) per ASTM F 879 unless otherwise indicated (see specific product installation/specifications).

.4 Footer: Fabricated from 1.900" O.D.RS20 (.090"-.100") wall galvanized steel tubing. Finish: ProShield, color specified.

.5 Helix Net Assy.: (Net) Made of tightly woven polyester-wrapped, six-stranded galvanized-steel cable with a polypropylene core. (Swage) 3/4" schedule 40 6063-T6 aluminum pipe. (S-Hooks) Fabricated from 5/16" diameter 316 stainless steel. (Cable Connectors) Fabricated from 6063-T6 aluminum.

.6 5" (127 mm) Round Clamp: All clamps, unless otherwise noted, shall be sand cast using a 535 aluminum alloy and having the following mechanical properties: Ultimate Tensile: 35,000 PSI. Yield Strength: 18,000 PSI. Elongation: 8% in 2 inches.

2.2.15 156462A - RingTangle DB Only

.1 Ball Clamp/Ball Retainer: Cast from 356-T6 Aluminum. Finish: ProShield, color specified.

.2 Fasteners: Primary fasteners shall be socketed and pinned tamperproof in design, stainless steel (SST) per ASTM F 879 unless otherwise indicated (see specific product installation/specifications).

.3 Ring Tangle Bottom: Weldment comprised of 1.315" O.D. RS20 (.080"-.090") galvanized steel tubing and 2.375" O.D. RS20 (.095"-.105") wall galvanized steel tubing. Finish: ProShield, color specified.

.4 Ring Tangle Top: Weldment comprised of 1.315" O.D. RS20 (.095"-.105") galvanized steel tubing and 1 7/8" steel ball. Finish: ProShield, color specified.

2.2.16 168364A - AdventureScapes Design 1 DB Only

.1 Footer Weldment comprised of 1.660" O.D. RS20 (.085"-.095") wall galvanized steel tubing and 3/16" HRPO sheet steel. Finish: ProShield, black in color.

.2 Fasteners: Primary fasteners shall be socketed and pinned tamperproof in design, stainless steel (SST) per ASTM F 879 unless otherwise indicated (see specific product installation/specifications).

.3 Outrigger Net Assy.: (Net) Made of tightly woven polyester-wrapped, six-stranded galvanized-steel cable with a polypropylene core. (Cord Connectors) fabricated from 1.25" O.D. 6063-T6 aluminum and (T-Connectors) fabricated from 6063-T6 aluminum.

.4 The Pointe Assy.: (Base) Weldment comprised of 1/4" HRPO sheet steel, C8 x 13.75 steel channel, 3" x 1 1/2" x .120" wall galvanized steel tube and 1 1/8" square bar. Finish: ProShield. (Pointe-fully assembled) Castings are made from Glass Fiber Reinforced Concrete (GFRC). Glass fiber is Alkali Resistant (AR) type glass formulated for concrete. Nominal wall thickness of 1" and weighs about 11 1/2 lbs. per square foot. Castings have a strength of 1,500 lbs. per square inch in tension and 5,000 lbs. per square inch in compression. Finish: Acid stain and latex paint made for concrete, color to be selected by City.

.5 Turnbuckle: Fabricated from forged galvanized steel.

.6 Rock Pocket Cover: Fabricated from 13 Ga. (.090") HRPO flat steel conforming to ASTM A 1011. Finish: Zinc plate with yellow chromate finish.

.7 Support Brace: Weldment comprised of 1.660" O.D. RS20 (.085"-.095") wall galvanized steel tube and 3/16" HRPO steel sheet. Finish: ProShield, black in color.

2.2.17 168365A - AdventureScapes Design 2 DB Only

.1 Footer Weldment comprised of 1.660" O.D. RS20 (.085"-.095") wall galvanized steel tubing and 3/16" HRPO sheet steel. Finish: ProShield, black in color.

.2 Chain: Steel 1/4" straight link chain, 3,150 lb, working load limit. Finish: Peer Gold.

.3 Fasteners: Primary fasteners shall be socketed and pinned tamperproof in design, stainless steel (SST) per ASTM F 879 unless otherwise indicated (see specific product installation/specifications).

.4 Corkscrew Net Assy.: Made of tightly woven polyester-wrapped, six-stranded galvanized-steel cable with a polypropylene core. (T-Connectors) fabricated from 6063-T6 alu-

minum, (Cable-Connectors)fabricated from 1.25" O.D. 6063-T6 aluminum and 1.500" O.D. 6063-T6 aluminum bar.

.5 The Pointe Assy.: (Base) Weldment comprised of 1/4" HRPO sheet steel, C8 x 13.75 steel channel, 3" x 1 1/2" x .120" wall galvanized steel tube and 1 1/8" square bar. Finish: ProShield. (Pointe-fully assembled) Castings are made from Glass Fiber Reinforced Concrete (GFRC). Glass fiber is Alkali Resistant (AR) type glass formulated for concrete. Nominal wall thickness of 1" and weighs about 11 1/2 lbs. per square foot. Castings have a strength of 1,500 lbs. per square inch in tension and 5,000 lbs. per square inch in compression. Finish: Acid stain and latex paint made for concrete, color to be selected by City.

.6 Turnbuckle: Fabricated from forged galvanized steel.

.7 Rock Pocket Cover: Fabricated from 13 Ga. (.090") HRPO flat steel conforming to ASTM A 1011. Finish: Zinc plate with yellow chromate finish.

.8 Support Brace: Weldment comprised of 1.660" O.D. RS20 (.085"-.095") wall galvanized steel tube and 3/16" HRPO steel sheet. Finish: ProShield, black in color.

2.2.18 159873A - 30x30 Shade Pyramid 45"Bury

.1 Fasteners: Primary fasteners shall be socketed and pinned tamperproof in design, stainless steel (SST) per ASTM F 879 unless otherwise indicated (see specific product installation/specifications).

.2 Pyramid Top: High-density polyethylene with ultra violet additives. All corners to be strengthened with 16 oz. non-tear vinyl material. Protective webbing is sewn into all areas where steel cable enters/exits cloth pockets. Live loads 20 psf. Wind design speed withstands up to 90 mph. Uplift 19 psf. Snow loads 5 psf. Tear strength warp 221 lb and weft 463 lb. Burst strength 38 PSIA.

.3 Post: See PlayBooster (PB) General Specifications.

.4 Cable: Made from 1/4" 7-19 galvanized steel cable and fastened with galvanized steel cable clamp.

.5 Crossbrace: Weldment comprised of 2.875" O.D. RS40 (.160"-.170") galvanized steel tubing. Finish: ProShield, color specified.

.6 Post Adapter: Weldment comprised of 5.000" O.D. 11 GA. galvanized steel tubing and 1/4" sheet stainless steel. Finish: ProShield, color specified.

.7 Pyramid Rafter: Fabricated from 5.000" O.D. 11 GA. galvanized steel tubing. Finish:ProShield, color specified.

2.2.19 171627A - Evos 1 Arch w/3 Attach Points DB Only

.1 Net Assembly: (Net) Made of tightly woven polyester-wrapped, six-stranded galvanized-steel cable with a polypropylene core. (Swage) 3/4" schedule 40 6063-T6 aluminum pipe. (S-Hooks) Fabricated from 5/16" diameter 316-TI stainless steel. (Cable Connectors) Cast from 356-T6 aluminum. Finish: ProShield, black in color. (Footing Connectors) Fabricated from 1 5/16" O.D. 6063-T6 aluminum.

.2 Evos General Specifications 5" Clamps: All clamps are ProShield finished and, unless otherwise noted, shall be sand cast using a 356-T6 aluminum and having the following mechanical properties: Ultimate Tensile: 35,000 PSI. Yield Strength: 18,000 PSI. Elongation: 8% in 2 inches 5". Arches: All steel arches are ProShield finished and manufactured from 5" O.D. galvanized tubing with a wall thickness of .120". Steel Arch Mechanical Properties: Yield Strength (min): 50,000 PSI. Tensile Strength (min): 55,000 PSI. % Elongation in 2 inches: 25. Modulus of Elasticity: 29.5 x 1,000,000 PSI. Cable: Comprised of six-stranded and tempered cable with a polypropylene core. The galvanized steel wire cores of the six strands are inductively fused to polyamide coating, black in color.

.3 Post: Fabricated from 5.000" O.D. x 11 GA. (.120") wall galvanized steel tube, top cap shall be die-cast 369.1 aluminum alloy. Finish: ProShield, color specified.

.4 Fasteners: Primary fasteners shall be socketed and pinned tamperproof in design, stainless steel (SST) per ASTM F 879 unless otherwise indicated (see specific product installation/specifications).

.5 Footer: Fabricated from 1.900" O.D.RS20 (.090"-.100") wall galvanized steel tubing. Finish: ProShield, color specified.

2.2.20 156452A - Wobble Pod DB Only

.1 Fasteners: Primary fasteners shall be socketed and pinned tamperproof in design, stainless steel (SST) per ASTM F 879 unless otherwise indicated (see specific product installation/specifications).

.2 Spring Leg: Weldment comprised of 3 1/2" O.D. RS20 (.120"-.130") galvanized steel tubing and 1/4" x 10" diameter HRPO zinc plated steel mounting plate. ProShield, color specified.

.3 Spring Assembly: Comprised of 5 5/8" diameter 13/16" tempered alloy steel coil, 1/4" thick HRPO zinc plated steel, 1/4" thick HRPO sheet steel and spring wedge casting made from A-356T-6 aluminum. Finish: ProShield, color specified.

2.2.21 156459A - Gyro Twister DB Only

.1 Bushing: Oil-filled UHMW PE.

.2 Footer: Weldment comprised of 2.375" O.D. RS40 (.130"-.140") wall galvanized steel tube, 12 GA. (.105") HR flat steel and 1 7/8" steel ball. Finish: ProShield, color specified.

.3 Gyro Twister Assy: Weldment comprised of 1.900" O.D. RS40 (.130"-.140") wall galvanized steel tube, 1.660" O.D. RS40 (.111"-.121") wall galvanized steel tube, 3/16" HRPO steel plate, and 1 7/8" steel ball. Finish: ProShield, color specified.

.4 Ball Clamp/Ball Retainer: Cast from 356-T6 Aluminum. Finish: ProShield, color specified.

.5 Fasteners: Primary fasteners shall be socketed and pinned tamperproof in design, stainless steel (SST) per ASTM F 879 unless otherwise indicated (see specific product installation/specifications).

.6 Upper Spinner Mount: Weldment comprised of 2.375" O.D. RS40 (.130"-.140") wall galvanized steel tube, 2.750" O.D. 1018 steel, and 1 7/8" steel ball. Finish: ProShield, color specified.

2.2.22 156463A - Bow Ladder

.1 Bow Ladder: Weldment comprised of 1.315" O.D. RS20 (.080"-.090") wall galvanized steel tubing, 2.375" O.D. RS20 (.095"-.105") wall galvanized steel tubing and 1 7/8" steel ball. Finish: ProShield, color specified.

.2 Ball Clamp/Ball Retainer: Cast from 356-T6 Aluminum. Finish: ProShield, color specified.

.3 Fasteners: Primary fasteners shall be socketed and pinned tamperproof in design, stainless steel (SST) per ASTM F 879 unless otherwise indicated (see specific product installation/specifications).

.4 E-Pod Rotationally molded from U.V. stabilized linear low density polyethylene, color specified.

.5 Pod: Rotationally molded from U.V. stabilized linear low density polyethylene, color specified.

.6 Pod Casting: Fabricated from sand cast alloy 356 in accordance with ASTM B26. Finish: ProShield, color specified.

2.2.23 160253A - Overhead Explorer DB Only

.1 Overhead Explorer: Weldment comprised of 2.375" O.D. RS20 (.095"-.105") wall galvanized steel tubing, 1.315" O.D. RS20 (.080"-.090") wall galvanized steel tubing, and 1 7/8" steel ball. Finish: ProShield, color specified.

.2 Support: Fabricated from 2.375" O.D. RS20 (.095"-.105") wall galvanized steel tubing. Finish: ProShield, color specified.

.3 Fasteners: Primary fasteners shall be socketed and pinned tamperproof in design, stainless steel (SST) per ASTM F 879 unless otherwise indicated (see specific product installation/specifications).

.4 E-Pod Rotationally molded from U.V. stabilized linear low density polyethylene, color specified.

.5 Pod: Rotationally molded from U.V. stabilized linear low density polyethylene, color specified.

.6 Pod Casting: Fabricated from sand cast alloy 356 in accordance with ASTM B26. Finish: ProShield, color specified.

2.2.24 182865A - Rush Slide DB Only

.1 Handbar: Fabricated from A356 aluminum. Finish: ProShield, color specified.

.2 Ball Clamp/Ball Retainer: Cast from 356-T6 Aluminum. Finish: ProShield, color specified.

.3 Curved Loop Pole: Weldment comprised of 2.375" O.D. RS20 (.095"-.105") wall galvanized steel tubing, and 1.029" O.D. RS20 (.070"-.080") wall galvanized steel tubing. Finish: ProShield, color specified.

.4 Hood: Rotationally molded from U.V. stabilized linear low density polyethylene, color specified.

.5 Fasteners: Primary fasteners shall be socketed and pinned tamperproof in design, stainless steel (SST) per ASTM F 879 unless otherwise indicated (see specific product installation/specifications).

.6 Crossover: Weldment comprised of 2.375" O.D. RS40 (.130"-.140") wall galvanized steel tubing, 3/16" HRPO steel sheet and 1 7/8" steel ball. Finish: ProShield, color specified.

.7 Handhold: Weldment comprised of 1.315" O.D. RS20 (.080"-.090") wall galvanized steel tubing and 7 GA. HRPO steel sheet. Finish: ProShield, color specified.

.8 Supports: Weldment comprised of 2.375" O.D. RS20 (.095"-.105") wall galvanized steel tubing and 7 GA. (4,54 mm) HRPO steel sheet. Finish: ProShield, color specified.

.9 Slide: Rotationally molded from U.V. stabilized linear low density polyethylene, color specified.

2.2.25 174018A - Belt Seat ProGuard Chains for 8' Beam Height

.1 Bolt Link: Stainless Steel

.2 Fasteners: Primary fasteners shall be socketed and pinned tamperproof in design, stainless steel (SST) per ASTM F 879 unless otherwise indicated (see specific product installation/specifications).

.3 Belt Seat: Molded from UV stabilized black EPDM rubber encapsulating a weldment comprised of a 22 GA (.029") spring stainless steel sheet and (4) .105" thick stainless steel washers. The belt seat elliptical shape measures 7" wide x 26" long x .700" thick.

.4 Chain/ProGuard: Steel 3/16" straight link chain, 800 lb. working load limit. Finish: ProGuard.

2.2.26 176038A - Full Bucket Seat ProGuard Chains for 8' Beam Height

.1 Fasteners: Primary fasteners shall be socketed and pinned tamperproof in design, stainless steel (SST) per ASTM F 879 unless otherwise indicated (see specific product installation/specifications).

.2 Full Bucket Seat: Made of U.V. stabilized high-quality black rubber encapsulating a 24 GA (.024") stainless steel reinforcement plate. Handles cast from 356-T6 aluminum alloy with black polyarmor paint finish. Handles attach to seat with (3) 1/4" x 1 5/16" long stainless steel rivets. The full bucket measures 9" deep x 10 1/2" wide.

.3 Chain/ProGuard: Steel 3/16" straight link chain, 800 lb. working load limit. Finish: ProGuard.

2.2.27 177330A - 5" Arch Swing Frame 8' Beam Height Only

.1 Swing Beam: Weldment comprised of tee clamps and 5" O.D. extruded 6005-T5 aluminum alloy tube with a .125" W. Finish: ProShield, color specified.

.2 Fasteners: Primary fasteners shall be socketed and pinned tamperproof in design, stainless steel (SST) per ASTM F 879 unless otherwise indicated (see specific product installation/specifications).

.3 Hanger Clamp Assembly: Cast aluminum. Finish: ProShield, color specified.

.4 Arch Posts: See PlayBooster (PB) General Specifications.

2.2.28 177331A - 5" Arch Swing Frame Additional Bay 8' Beam Height Only

.1 Swing Beam: Weldment comprised of tee clamps and 5" O.D. extruded 6005-T5 aluminum alloy tube with a .125" W. Finish: ProShield, color specified.

.2 Fasteners: Primary fasteners shall be socketed and pinned tamperproof in design, stainless steel (SST) per ASTM F 879 unless otherwise indicated (see specific product installation/specifications).

.3 Hanger Clamp Assembly: Cast aluminum. Finish: ProShield, color specified.

.4 Arch Posts: See PlayBooster (PB) General Specifications.

2.3 PLAY EQUIPMENT - WEEVOS (2-5 YEARS)

2.3.1 (WV) Weevos General Specifications:

.1 3 1/2" Arches: All steel arches are ProShield finished and manufactured from 3 1/2" O.D. galvanized tubing with a wall thickness of .120".

.2 Steel Arch Mechanical Properties:

a. Yield Strength (min): 50,000 PSI
b. Tensile Strength (min): 55,000 PSI
c. % Elongation in 2 inches: 25
d. Modulus of Elasticity: 29.5 x 1,000,000 PSI

.3 3 1/2" Clamps:All clamps are ProShield finished and, unless otherwise noted, shall be sand cast using a 356-T6 aluminum alloy having the following mechanical properties:

a. Ultimate Tensile: 35,000 PSI
b. Yield Strength: 18,000 PSI
c. Elongation: 8% in 2 inches

2.3.2 Cable: Comprised of six-stranded and tempered Corocord cable with a polypropylene core. The galvanized steel wire cores of the six strands are inductively fused to polyamide coating, black in color.

2.3.3 164178A - Boppity Bridge DB

.1 Boppity Bridge: Rotationally molded from U.V. stabilized linear low density polyethylene, color specified.

.2 Ball Clamp: Fabricated from sand cast A356-T6 aluminum alloy. Finish: ProShield, color specified.

.3 Fasteners: Primary fasteners shall be socketed and pinned tamperproof in design, stainless steel (SST) per ASTM F 879 unless otherwise indicated (see specific product installation/specifications).

.4 Footer (DB): Weldment comprised of 1.660" (42,16 mm) O.D. RS20 (.085"-.095") galvanized steel tubing and 3/16" HRPO sheet steel. Finish: ProShield, color specified.

.5 Single & Double Brackets: Weldment comprised of 3/8" (.375") HRPO steel plate and .250" R flat steel. Finish: ProShield, color specified.

.6 Cable Assembly: Made of tightly woven polyester-wrapped, six-stranded galvanized-steel cable with a polypropylene core. (Cable Connectors) 6063-T6 aluminum.

.7 Bridge Support (DB): Weldment comprised of 1.900" O.D. RS40 (.120"-.130") wall galvanized steel tubing, 3/8" HRPO steel plate and 1 7/8" steel ball. Finish: ProShield, color specified.

2.3.4 173575A - Swiggly Stix Bridge DB

.1 Fasteners: Primary fasteners shall be socketed and pinned tamperproof in design, stainless steel (SST) per ASTM F 879 unless otherwise indicated (see specific product installation/specifications).

.2 Pod: Rotationally molded from U.V. stabilized linear low density polyethylene, color specified.

.3 Footer (DB): Weldment comprised of 1.660" O.D. RS20 (.085"-.095") galvanized steel tubing and 3/16" HRPO sheet steel. Finish: ProShield, color specified.

.4 Upper Support: Fabricated from 1.900" O.D. RS20 (.090"-.100") wall galvanized steel tubing, 3/8" thick HRPO steel plate and 1 7/8" steel ball. Finish: ProShield, color specified.

.5 Cable: Made of tightly woven polyester-wrapped, six-stranded galvanized-steel cable with a polypropylene core. (Cable Connectors) 6061-T6 aluminum. (Pod Mounting Plate) Weldment consists of 3/16" 6061-T6 aluminum plate and 1.315" O.D. schedule 160 6061-T6 aluminum pipe.

.6 Support Tube: Weldment comprised of 1.900" O.D. RS-20 (.090" - .100") galvanized steel tubing, 1/8" x 1 1/2" HR flat steel and 1/4" HRPO flat steel. Finish: ProShield, color specified.

2.3.5 164171A - Giggle Jiggler DB

.1 Ring: Rotationally molded from U.V. stabilized linear low density polyethylene, color specified.

.2 Cable Assembly: Made of tightly woven polyester-wrapped, six-stranded galvanized-steel cable with a polypropylene core. (Cable Connectors) 6061-T6 aluminum. (Bolt Plate) Weldment comprised of 3/16" 5052 aluminum plate and 1.315" O.D. schedule 160 6061-T6 aluminum pipe.

.3 Support Beam (DB): Weldment comprised of 1.900" O.D. RS40 (.120"-.130") wall galvanized steel tubing, 3/8" HR flat steel and 1 7/8" steel ball. Finish: ProShield, color specified.

.4 Support Leg (DB): Fabricated from 1.900" O.D. RS40 (.120"-.130") wall galvanized steel tubing. Finish: ProShield, color specified.

.5 Ball Clamp: Fabricated from sand cast A356-T6 aluminum alloy. Finish: ProShield, color specified.

.6 Fasteners: Primary fasteners shall be socketed and pinned tamperproof in design, stainless steel (SST) per ASTM F 879 unless otherwise indicated (see specific product installation/specifications).

.7 Footer (DB): Weldment comprised of 1.660" O.D. RS20 (.085"-.095") galvanized steel tubing and 3/16" HRPO sheet steel. Finish: ProShield, color specified.

2.3.6 173573A - Wee Planet Climber DB

.1 Bracket: Fabricated from 14 GA. (.083") HRPO flat steel. Finish: ProShield, color specified.

.2 Panel: Permalene, color specified.

.3 Fasteners: Primary fasteners shall be socketed and pinned tamperproof in design, stainless steel (SST) per ASTM F 879 unless otherwise indicated (see specific product installation/specifications).

.4 Clevis: Weldment comprised of .375" HRPO thick flat steel and .25" thick HRPO flat steel. Finish: ProShield, color specified.

.5 Panel Footer: Weldment comprised of 1.315" O.D. RS20 (.080" - 090") wall galvanized steel tubing and 1/4" HRPO flat steel. Finish: ProShield, color specified.

.6 Table Support: Weldment comprised of 1.315" O.D. RS20 (.080" - 090") wall galvanized steel tubing and 1/4" HRPO flat steel. Finish: ProShield, color specified.

.7 Rail: Fabricated from 1.900" O.D. RS20 (.090"-.100") wall galvanized steel tubing and 3/16" HRPO steel sheet. Finish: ProShield, color specified.

.8 Cable: Made of tightly woven polyester-wrapped, six-stranded galvanized-steel cable with a polypropylene core. (Cable Connectors) 6061-T6 aluminum.

.9 Wee Pod Ball: 1 7/8" Steel ball. Finish: ProShield, color specified.

2.3.7 159873A - 30x30 Shade Pyramid 45"Bury

.1 Fasteners: Primary fasteners shall be socketed and pinned tamperproof in design, stainless steel (SST) per ASTM F 879 unless otherwise indicated (see specific product installation/specifications).

.2 Pyramid Top: High-density polyethylene with ultra violet additives. All corners to be strengthened with 16 oz. non-tear vinyl material. Protective webbing is sewn into all areas where steel cable enters/exits cloth pockets.Live loads 20 psf. Wind design speed withstands up to 90 mph. Uplift 19 psf. Snow loads 5 psf. Tear strength warp 221 lb and weft 463 lb. Burst strength 38 PSIA.

.3 Post: See PlayBooster (PB) General Specifications.

.4 Cable: Made from 1/4" 7-19 galvanized steel cable and fastened with galvanized steel cable clamp.

.5 Crossbrace: Weldment comprised of 2.875" O.D. RS40 (.160"-.170") galvanized steel tubing. Finish: ProShield, color specified.

.6 Post Adapter: Weldment comprised of 5.000" O.D. 11 GA. galvanized steel tubing and 1/4" sheet stainless steel. Finish: ProShield, color specified.

.7 Pyramid Rafter: Fabricated from 5.000" O.D. 11 GA. galvanized steel tubing. Finish:ProShield, color specified.

2.3.8 164173A - Twirly Bar DB

.1 Ball Clamp: Fabricated from sand cast A356-T6 aluminum alloy. Finish: ProShield, color specified.

.2 Fasteners: Primary fasteners shall be socketed and pinned tamperproof in design, stainless steel (SST) per ASTM F 879 unless otherwise indicated (see specific product installation/specifications).

.3 Twirly Bar (DB): Weldment comprised of 1.315" O.D. RS20 (.080"-.090") wall galvanized steel tubing and 1 7/8" steel ball. Finish: ProShield, color specified.

2.3.9 164177A - ChitterChatter Noodle

.1 Chatter Noodle Plate: Weldment comprised of 1.250" O.D. x 11 GA. (120") black steel tube and 12 Ga. (.105") HRPO flat steel. Finish: ProShield, color specified.

.2 Chatter Post: Fabricated from 3.500" O.D. RS20 (.125") wall galvanized steel tube. Finish ProShield, color specified.

.3 Chatter Noodle Ball: Rotationally molded from U.V. stabilized linear low density polyethylene, color specified.

.4 Fasteners: Primary fasteners shall be socketed and pinned tamperproof in design, stainless steel (SST) per ASTM F 879 unless otherwise indicated (see specific product installation/specifications).

.5 Hose Clamp: Band and housing made from 300 series stainless steel. Slotted screw with hex head and safety collar is cadmium-plated carbon steel.

.6 Talk Tube Hose: Made from 1.75" O.D. HDPE conduit.

2.3.10 173582A - Imagination Table DB

.1 Ball Clamp: Fabricated from sand cast A356-T6 aluminum alloy. Finish: Pro-Shield, color specified.

.2 Fasteners: Primary fasteners shall be socketed and pinned tamperproof in design, stainless steel (SST) per ASTM F 879 unless otherwise indicated (see specific product installation/specifications).

.3 Panel Frame: Weldment comprised of 2.375" O.D. RS20 (.095"-.105") galvanized steel tubing, 1/8" HRPO steel sheet and 1 7/8" steel ball. Finish: ProShield, color specified.

.4 Permalene Panel: Two color, color specified.

2.3.11 173583A - Bongo/Xylofun Panels DB

.1 Bongo: Rotationally molded from U.V. stabilized linear low density polyethylene, color specified.

.2 Ball Clamp: Fabricated from sand cast A356-T6 aluminum alloy. Finish: Pro-Shield, color specified.

.3 Fasteners: Primary fasteners shall be socketed and pinned tamperproof in design, stainless steel (SST) per ASTM F 879 unless otherwise indicated (see specific product installation/specifications).

.4 Panel Frame: Weldment comprised of 2.375" O.D. RS20 (.095"-.105") galvanized steel tubing, 1/8" HRPO steel sheet and 1 7/8" steel ball. Finish: ProShield, color specified.

.5 Permalene Panel: Two color, color specified.

.6 Xylofun Panel Assy.: (Panels) Two color Permalene, color specified. 1/8" Thick steel, .125" O.D. aluminum tube and 1/2" threaded steel rod. Finish: ProShield, color specified.

.7 Screen Plate: Fabricated from 12 GA. (.105") HRPO flat steel. Finish: Black in color.

2.3.12 164174A - Cozy Coaster Slide w/ASTM Handrail DB w/Stairs Under Large Arch

.1 Mid-Support & Footer (DB): Weldment comprised of 2.375" O.D. RS20 (.095"-.105") wall galvanized steel tubing, and 1/4" HRPO steel plate. Finish: ProShield, color specified.

.2 Handbar: Fabricated from A356 aluminum. Finish: ProShield, color specified.

.3 Handloop: Weldment comprised of 1.315" O.D. RS20 (.080"-.090") wall galvanized steel tubing, and 3/16" HRPO steel plate. Finish: ProShield, color specified.

.4 Rail Footers (DB): Weldment comprised of 1.315" O.D. RS20 (.080"-.090") wall galvanized steel tubing with 203 or 303 stainless steel welded inserts with 5/8" internal threads and 5/8" x 1 1/2" BHCS w/pin. Finish: ProShield, color specified.

.5 Slide Stairs: Rotationally molded from U.V. stablilized linear low density polyethylene, color specified.

.6 Slide: Rotationally molded from U.V. stablilized linear low density polyethylene, color specified.

.7 Ball Clamp: Fabricated from sand cast A356-T6 aluminum alloy. Finish: ProShield, color specified.

.8 Fasteners: Primary fasteners shall be socketed and pinned tamperproof in design, stainless steel (SST) per ASTM F 879 unless otherwise indicated (see specific product installation/specifications).

.9 Slide Crossover: Weldment comprised of 1.900" O.D. RS20 (.095"-.105") wall galvanized steel tubing, 2.375" O.D. RS20 (.095"-.105") wall galvanized steel tubing, 1 7/8" steel ball and 3/16" HRPO steel plate. Finish: ProShield, color specified.

.10 Spiral Stair Rail: Weldment comprised of 1.315" O.D. RS20 (.080"-.090") wall galvanized steel tubing with 203 or 303 stainless steel welded inserts with 5/8" internal threads and 3/16" HRPO steel plate. Finish: ProShield, color specified.

PART 3 - EXECUTION

3.1 INSTALLATION:

3.1.1 Concrete Footings: Provide footing size, width and depth in accordance with the manufacturer's recommendations. Place evenly on all sides of pipe posts, lightly vibrate and screed flush with adjacent surfaces.

3.1.2 Install posts true and plumb.

3.1.3 Connections shall be secure, fittings, pipes and welds shall be free of burrs, sharp edges and shall be smooth to the touch.

3.1.4 Welds made after galvanizing shall be touched up with materials specified applied in strict accordance with manufacturer's specifications.

END OF SECTION

02/11/2014

SECTION 02885

PLAY FIELD EQUIPMENT

PART 1 - GENERAL

1.1 SUMMARY:

1.1.1 Section Includes: Exterior play field athletic equipment.

1.1.2 Related Documents: The Conditions of the Contract and Division 1 apply to this section as fully as if repeated herein.

1.1.3 Related Sections:

.1 Paint striping and marking: Specified in Section 02763.

.2 Chain Link Fencing: Specified in Section 02821.

.3 High-Performance Coatings: Specified in Section 09960.

1.2 REFERENCES:

The editions of specifications and standards referenced herein, published by the following organizations, apply to the construction only to the extent specified by the reference. Refer to Section 01422 for information concerning availability and use of references.

American Society for Testing and Materials (ASTM)
American Welding Society (AWS)
National Federation State High School Association (NFSHSA)

1.3 SUBMITTALS:

1.3.1 Shop Drawings: Submit shop drawings showing sizes, details of construction, assembly, and other pertinent information. Provide diagrams, templates, and installation instructions as required for the installation of items.

1.3.2 Product Data: Submit manufacturer's literature and brochures, and catalog cuts, showing complete details of all manufactured and fabricated items.

1.3.3 Submittal procedures and quantities are specified in Section 01334.

1.4 REGULATORY REQUIREMENTS:

Except as modified by the requirements indicated or specified herein, exterior athletic equipment shall meet the requirements of NFSHSA.

1.5 DELIVERY, STORAGE, AND HANDLING:

Deliver material in time to insure uninterrupted progress of the construction. Store materials in a manner to preclude damage and permit access for inspection and identification. Store steel materials, either plain or fabricated, above the ground upon platforms, pallets, skids, or other supports. Keep materials free from dirt, grease, and other foreign matter, and protect from corrosion. Material showing evidence of damage will be rejected; immediately remove from the site.

PART 2 - PRODUCTS

2.1 MATERIALS:

2.1.1 Steel, Rolled Shapes, Bars and Plates: Standard structural sections, ASTM A 36.

2.1.2 Steel Pipe: ASTM A 53, Schedule 40, unless otherwise specified.

2.1.4 Steel Tubing: ASTM A 501 or ASTM A 500, grade B, seamless.

2.1.5 Aluminum Alloy Products:

.1 Sheet or Plate, ASTM B 209, alloy selected to meet the structural requirements of the specific application. Provide smooth surface finish, free of extrusion marks or imperfections.

.2 Extrusions: ASTM B 221, alloy 6063-T5, or other alloy of equivalent durability and strength properties.

.3 Aluminum Castings: Alloy and temper recommended by aluminum producer or finisher for casting process used.

2.1.6 Anchors, Bolts, and Fastenings: ASTM A 307, Grade A and ASTM A 563.

2.1.7 Electrodes: Meet the requirements of AWS A5.1-91 or A5.5-96 E60XX or E70XX.

2.1.8 Shop Primer: Manufacturer's or fabricator's standard, fast curing, lead free primer selected for good resistance to normal atmospheric corrosion, and for compatibility with finish paint systems specified, and for capability to provide a sound foundation for field applied topcoats despite prolonged exposure, complying with performance requirements of Fed. Spec. TT-P-645.

2.1.9 Quick Setting Hydraulic Cement: Acceptable products or equal:

The Burke Co.; Burke Plug
Minwax Construction Products Div.; Super Por-Rok
Tamms Industries Co.; Tammstech Rapid Rock

Master Builders; Masterflow 713

2.1.12 Concrete: Provide concrete for footings consisting of 5.25 sacks of cement per cubic yard, 1 inch maximum size aggregate, a maximum slump of 6 inches and minimum compressive strength of 2,500 psi at 28 days. Provide concrete materials, mixing and placing in conformance with applicable requirements specified in Section 03300.

2.2 PICKLEBALL EQUIPMENT:

2.5.1 Posts: Minimum nominal 2-7/8 inch outside diameter steel pipe, complete with removable aluminum handle and ratchet. Overall length 54". Acceptable product or equal:

Pickleball Central; Product # CS1002

2.5.2 Post Sleeves and Caps: Provide ground sleeves and caps. Acceptable product or equal:

Pickleball Central; Product # CS1248W

2.5.3 Nets: 3 mm braided polyethylene mesh netting, 23 ounce heavy vinyl headband, and ½" fiberglass dowels. Provide steel cable through top binding. Acceptable product or equal:

Pickleball Central; Product # CS1003

PART 3 - EXECUTION

3.1 INSTALLATION:

3.1.1 Concrete Footings: Provide footing size, width and depth in accordance with the manufacturer's recommendations. Place evenly on all sides of pipe posts, lightly vibrate and screed flush with adjacent surfaces.

3.1.2 Install posts true and plumb.

3.1.3 Connections shall be secure, fittings, pipes and welds shall be free of burrs, sharp edges and shall be smooth to the touch.

3.1.4 Welds made shall be touched up with materials specified applied in strict accordance with manufacturer's specifications.

END OF SECTION

34-003 – 02/21/2014

SECTION 02900

PLANTING

PART 1 - GENERAL

1.1 SUMMARY:

1.1.1 Section Includes: Planting of trees and shrubs; seeding and/or sodding of lawns; soil preparation / soil additives, and maintenance of plantings and landscape areas.

1.1.2 Related Documents: The Conditions of the Contract and Division 1 apply to this section as fully as if repeated herein.

1.2 SCOPE:

- Finish grading and shaping surfaces to receive planting
- Crushed rock ground cover
- Plant materials
- Pruning of trees and shrubs
- Maintenance of all planting
- Guarantee
- Related work specified elsewhere:
    - Automatic Irrigation
    - Landscape Maintenance

1.3 DEFINITIONS:

The term "Planting Area" shall mean all areas to be planted with trees, shrubs, and sod.

1.4 SUBMITTALS:

1.4.1 Submit certificates of compliance, trip slips and invoices for soil amendments, fertilizers, and photos of plant material.

1.4.2 Shrub and Tree Photos: Submit photos of each variety and size of plant materials under 15 gallons in size, to the City and Landscape Architect a minimum of 15 days before planting operations. Accepted photos shall remain on the site and shall be maintained as standards of comparison for plant materials to be furnished.

1.4.4 Agricultural Suitability Soils Test: After completion of rough grading and prior to fine grading and soil preparation, obtain agricultural suitability soils tests for planting areas. The Contractor shall hire an agronomist to take the soil samples. Testing shall include a minimum of three sampling locations, each unique to the site. The tests shall include a fertility and suitability analysis with written recommendations by the agronomist for soil amendments and conditioners, backfill mixes, auger hole requirements, maintenance and post-maintenance liquid fertilizer application requirements. The results of this test shall supersede the amendment and fertilizer schedule specified herein and no planting or seeding shall be done until the Landscape Architect and/or City approves

the soils test recommendations. Soil testing shall be performed by an approved soils testing laboratory.

1.4.5 Submittal procedures and quantities are specified in Division 1.

1.5 QUALITY ASSURANCE:

1.5.1 After installation of plant materials but before the pre-maintenance inspection, the Architect, using the specified copies of the certificates, trip slips, and invoices for the plant materials and related items, will check such material, comparing the total quantities of each material furnished against the total area and the quantities specified. If the minimum amounts have not been furnished, the City and/or Landscape Architect will require the installation of additional materials to fulfill the minimum requirements specified.

1.5.2 Upon delivery of materials and completion of soil conditioning and grading but before initiating planting operations, the City and Landscape Architect using the specified copies of certificates, trip slips, and invoices for soil preparation materials, will check such material, comparing the total quantities of each material furnished against the total area of each operation. If the minimum rates of application have not been met, the City and Landscape Architect will require the distribution of additional quantities of these materials to fulfill the minimum application requirements specified.

1.5.3 Deliver a sample of the recommended soil amendments to a testing laboratory. Forward the results to the Landscape Architect within 35 days after "Notice to Proceed" for review. After soil amendments have been thoroughly mixed into the site, take random samples of the mixed soil and deliver them to the testing laboratory for comparison to a control mix. Responsibility for payment for testing by the testing laboratory shall be as specified in Division 1.

1.5.4 Observations will be made by the City and Landscape Architect. Contractor shall be on site when observations are made. Request observation by telephone at least two working days in advance of date desired. If the work is not ready for observation when the Landscape Architect/City arrives, Contractor shall pay for the Landscape Architect's visit.

1.5.5 Observation is required for the following:

.1 When grading and soil conditioning has been completed, prior to planting.

.2 Boulder placement.

.3 When trees and shrubs have been spotted for planting, but before planting holes are excavated.

.4 When planting and all other specified work has been completed, prior to maintenance period.

.5 At end of 90-day maintenance period, if requested.

1.6 SITE CONDITIONS

1.6.1 Environmental Requirements:

.1 Perform actual planting during those periods when weather and soil conditions are suitable in accordance with locally accepted horticultural practice.

.2 Perform grading and soil preparation only during the period when beneficial and optimum results may be obtained. If the moisture content of the soil should reach such a level that working it would destroy soil structure, suspend spreading and grading operations until the moisture content is increased or reduced to acceptable levels and the desired results are likely to be obtained.

1.6.2 Existing Conditions:

.1 Before excavation for planting or placing of plant materials, locate underground utility lines still in use and take proper precautions to avoid damage to such improvements. In the event of a conflict between such lines and plant locations, notify the Landscape Architect and/or City who will arrange for the relocation of one or the other. Assume responsibility for making repairs to damage to existing facilities resulting from landscaping activities.

.2 Utilities (water and electricity) used during the installation of the landscaping and irrigation systems shall be paid for as specified in Division 1. During the 90-day maintenance period the Owner will be responsible for the payment of the utilities.

1.6.3 Field Measurements:

.1 Scaled dimensions are approximate. Before proceeding with landscaping, carefully check and verify dimensions and immediately inform the Landscape Architect and/or City of discrepancies between the drawings and specifications and actual conditions.

1.7 GUARANTEES AND REPLACEMENTS:

1.7.1 Guarantee shrubs, (5 gallon and smaller) to remain healthy and vigorously growing for 90 days.

1.7.2 Guarantee trees and shrubs (15 gallon and larger) to live in a healthy condition for a period of one year from date of acceptance. All palm trees, regardless of size, shall be guaranteed for one year.

1.7.3 All guarantee periods commence from the time of final acceptance by the City at the successful completion of the maintenance period.

1.7.4 Replace all dead plants and those not in vigorous conditions noted during the maintenance period, as soon as weather permits.

1.7.5 Replace within 14 days, plants found to be dead and plants not in a vigorous condition noted within the guarantee period.

1.7.6 Plants used for replacements shall be of the same kind and size as originally planted. Plants shall be furnished, planted, and fertilized as specified and guaranteed.

1.7.7 Frost Damage: All plants specified are considered appropriate to the local climate, based on accepted industry standards. It is understood that frosts occur on occasion, and, as such, will be treated as a no-fault "act of God." If plant material has been delivered to the site, but not planted, the Contractor will replace any dead or damaged plant material at no cost to the City. If plant material has been planted per these specifications prior to the frost, then the City shall be responsible for cost of replacing frost-damaged plant material.

1.8 MAINTENANCE:

1.8.1 The maintenance period begins on the first day after all landscape work on this project is complete, checked, accepted, and written approval from the Landscape Architect/City is given to begin the maintenance period, and shall continue thereafter for no less than 90 continuous calendar days.

1.8.2 Continuously maintain all landscape areas during the progress of the landscaping operations and during the maintenance period until the final acceptance of the work. Contractor shall be responsible for maintenance fertilizer applications as recommended by the liquid fertilization system supplier.

1.8.3 Regular planting maintenance operations shall begin immediately after each plant or lawn is planted. Plants and lawns shall be kept in a healthy, growing condition and in a visually pleasing appearance by watering, pruning, mowing, rolling, trimming, edging, fertilizing, re-staking, pest and disease controlling, spraying, weeding, cleaning-up and other necessary operation of maintenance. Landscape areas shall be kept free of weeds, noxious grass, and other undesired vegetative growth and debris. Plants found to be dead or in an impaired condition shall be replaced immediately.

1.8.4 Maintenance shall include the regular removal of dead and/or hanging palm tree fronds during the maintenance period. Contractor shall make final removal of these fronds at the end of the maintenance period prior to acceptance by the Owner.

1.8.5 The completion date of the contract maintenance period will be extended, when in the opinion of the Landscape Architect and/or City, improper maintenance or possible poor or unhealthy condition of planted material or un-established non-covering lawns are evident at the termination of the scheduled maintenance period. Assume responsibility for additional maintenance of the landscaping until landscaping is completed and acceptable. Complete germination of all hydro-seed areas must occur before final acceptance.

1.8.6 Assume responsibility for maintaining adequate protection of planting areas. Repair damaged areas immediately.

1.8.7 Turf Areas: Within the first 20 days of maintenance period:

.1 Remove all rocks or other debris that would constitute a hindrance to subsequent mowing or present an untidy appearance.

.2 Repair all damage caused in performance of work.

.3 Fill all depressions and eroded channels with sufficient backfill mix to raise to proper grade.

.4 Roll all lawn areas with a roller weighing approximately 16 pounds per lineal inch to compact the soil around the roots and provide a smooth, even mowing surface.

.5 Mow turf with a reel mower when it reaches height of 3/4 of an inch. Mow to a height of 1/2 inch and repeat as turf grows. Remove all cuttings.

.6 Core five 1 inch diameter holes to a depth of 18 inches with a soil probe evenly spaced at the drip-line of each tree. Remove turf to create basins around trees in lawn areas.

1.8.8 Thirty days prior to the end of the maintenance period, the Contractor shall request a site investigation by a horticulturist. The horticulturist shall collect three plant material samples and shall perform a plant tissue NIRS analysis. Results of this analysis shall be incorporated into the maintenance fertilization schedule before acceptance.

PART 2 - PRODUCTS

2.1 TOPSOIL:

2.1.1 Existing soil on the site shall be used as topsoil for planting purposes where possible, but shall be free of debris, oil, weeds, or other foreign matter. Contaminated soil shall be removed and replaced with acceptable existing soil or imported soil.

2.1.2 Imported soil shall be sandy textured. Silt plus clay content of this soil shall not be greater than 15 percent by weight. The boron content of this soil shall not be greater than 1 part per million, as measured on the saturation extract. The sodium absorption ration (SAR) shall not exceed 6.0 millimhos per centimeters at 25 degrees celsius.

2.2 FERTILIZERS AND SOIL CONDITIONERS:

2.2.1 Organic amendment shall be Greenwaste from a County licensed composting facility.

2.2.2 Commercial fertilizer shall have a minimum of 16 nitrogen, 6 phosphoric acid, 8 potash. Deliver mixed fertilizer in standard bags, marked with weight, analysis and name of manufacturer. Keep fertilizer in dry storage.

2.2 PLANTING BACKFILL: (Bidding Purposes Only)

Planting backfill shall be a thoroughly blended mixture of topsoil and soil amendments at the following rates for each planting pit:

Soil conditioner	20% volume of backfill in upper 12” of backfill only.
Stockpiled on site soil	80% volume of backfill
Iron sulphate	1 pounds per cubic yard of mix

2.3 STAKING MATERIALS:

Double/Single Staking: Stakes shall be of lodge-pole pine, straight shafts, shaved and cut clean and bare of branches and stubs, of uniform thickness with a minimum diameter of 2 inches, free of loose knots, splits or bends. Stakes shall be no less than 10 feet long.

2.4 GUYING MATERIALS:

2.4.1 Guy Wires: Pliable, zinc-coated steel, 12 gage.

2.4.2 Anchors (Deadman) for Holding Guy Wires: 4" by 4" solid lumber, 18 inches long.

2.4.3 Hose for Covering Wire: 2 ply reinforced rubber, used or new, garden hose type of at least 1/2 inch diameter.

2.4.4 Flags to be Attached to Guys: Surgical tubing, 1/8 inch diameter and 4 feet long, of uniform thickness.

2.4.5 Tree Ties: Acceptable product includes, but is not limited to, the following:

Bordon; Cinch-Tie

2.5 PLANT MATERIALS:

2.5.1 Nomenclature: The scientific and common names of plants herein specified conform with the approved names given in "A Checklist of Woody Ornamental Plants of California", published by the University of California, College of Agriculture, Manual 32 (1963). Refer to list of plant material on drawings.

2.5.2 All plants should conform to the American Standards for Nursery Stock. Use the Arizona Nursery Associations Growers Guide for arid plants.

2.5.3 Quality and size of plants shall be No. 1, of Pinto Tag stock. They shall be vigorous, of normal growth, free from disease, insects, insect eggs, and exceed the measurements specified. Pinto Tags shall be submitted to the Landscape Architect.

2.5.4 Plants must be free of major cuts, wounds or sunburn fissure.

2.5.5 Container stock (1 gallon, 5 gallon, 15 gallon boxes) shall have been grown in containers for at least 6 months, but not over 2 years. No container plants that have cracked or broken balls of earth, when taken from the container, shall be planted, except upon special approval. No trees with damaged roots or broken balls shall be planted.

2.5.6 Trees should be no less than twenty-four (24) inch containerized trees. Multi trunk trees should stand no less than five (5) to six (6) feet high. Single leader trees should have a minimum one and one half inch or greater caliper trunk size, measure at six (6) inches above soil grade. Minimum tree dimensions for the smallest trees should meet the following criteria:

		Tree Height	Width	Trunk Size
FAST GROWING TREES:				
Standard Trunk	24” Box	10’ - 12’ x 4’	5 x 2”	2-1/2”
Multi-Trunk	24” Box	8’ - 9’ x 5’	6’ x 1-1/2”	2”
SLOW GROWING TREES:				
Standard Trunk	24” Box	8’ - 9’ x 3’	4 x 1-3/4”	2”
Multi-Trunk	24” Box	6’ - 8’ x 4’	5’ x 1-1/2”	1-3/4”

2.5.7 Pruning shall not be done, before delivery, except by written approval of the Landscape Architect and/or City.

2.5.8 Inspection of plant materials, required by City, County or State authorities, shall be the responsibility of the Contractor, and where necessary he shall secure permits or certificates before delivery of plants to site.

2.5.9 Plants shall be subject to inspection and approval or rejection, at the site at any time before or during progress of landscaping, for size, variety, condition, latent defects and injuries. Immediately remove rejected plants from the site.

2.5.10 Substitutions will not be permitted except that if proof is submitted that any plant specified is not obtainable, a proposal will be considered for use of the nearest equivalent size or variety and cost. All substitutions are subject to Landscape Architects approval in accordance with the General Conditions.

2.5.11 Quantities shall be furnished as needed to complete landscaping indicated.

2.5.12 The Landscape Architect reserves the right to inspect root condition of any species, particularly those grown from seed, and if found defective, to reject the plants represented by the defective sample.

2.5.13 Identify plant species or varieties correctly on legible, weatherproof labels attached securely to plant. There shall be a minimum of one labeled plant for each 5 plants in a lot.

2.5.14 Pre-emergence Herbicide: Acceptable manufacturers include, but are not limited to, the following:

Surflan
Treflan
Dymid
Eptam

2.5.15 Weed Contact Spray: Acceptable products include, but are not limited to, the following:

Phytar 560
Broadside

2.6 CRUSHED ROCK / GROUND COVER

2.6.1 Inert mulch shall be 3/8" minus with 11% fines screed decomposed granite as approved by the City/Landscape Architect. The following procedures are to be followed during installation:

.1 Spray soil with pre-emergent.

.2 Wet and compact area which is to received rock to 90% compaction.

.3 Spread, wet and roll crushed rock to specified thickness. If no thickness is specified provide 2" minimum thickness. Thickness of rock shall be uniform.

2.6.2 Decomposed Granite shall be 3/8" minus with 11% fines Brimstone by Southwest Boulder (refer to plans for additional specifications as to size and color). Submit sample to Owner's Representative for approval.

2.7 WEED BARRIER

2.7.1 Weed barrier shall be a 5.3 ounce heavyweight UV stabilized non-woven polypropylene landscape fabric, as manufactured by Phillips Fibers Corporation or approved equal.

2.8 ARBOR GUARDS

2.8.1 Provide District approved arbor guards for trees planted in turf areas. Provide multiple guards, one per trunk, for multi-trunk trees.

PART 3 - EXECUTION

3.1 WEED ERADICATION

3.1.1 Perform the following procedures for all irrigated planting areas:

.1 Spot spray all perennial weeds with a non-selective systemic contact herbicide.

.2 Manually remove all remaining weeds, and dispose off-site.

.3 Install irrigation system.

.4 Apply irrigation at a rate sufficient to promote weed growth for a period of 2 to 3 weeks.

.5 When weed seeds have germinated and grown to a height of 2 inches, discontinue irrigation for a period of three (3) days to prepare the areas for access.

.6 Spray all weeds with a non-selective contact herbicide and urea Formaldehyde 38-0-0 liquid fertilizer. Spray all Bermuda Grass with a non-selective systemic herbicide. Apply no water for a minimum of four (4) days following application of contact weed killer.

.7 Allow a sufficient period of time to ensure that all weeds are dead. Follow herbicide manufacturer's directions.

.8 Lightly irrigate planting areas for a period of 2 to 3 weeks, without causing erosion of soils.

.9 Spot spray all weed re-growth with non-selective contact herbicide.

.10 Plant container stick (no liners or rooted cuttings) seven (7) days following high nitrogen fertilizer application and irrigation.

.11 Evenly distribute specified soil amendments to all areas.

.12 Water all planting areas for three (3) consecutive days to moisten upper layers of soil prior to seeding operations without causing erosion to the soils.

.13 Do not allow the soil surface to be super saturated with water or excessively dry prior to hydro-seeding. Verify that residual moisture lies within the first 1/2 inch of the soil surface.

3.1.2 Selection of herbicides, application rates and methods are to be performed under the control and guidance of a California licensed pest control advisor and applicator.

3.2 SOIL CONDITIONING, FERTILIZING AND ROTOTILLING

3.2.1 Soil samples (one per acre; minimum here per site) should be sent to Surabian Agriculture Lab, 105 Tesori Drive, Palm Desert, CA 92211 760-200-4498 or other approved laboratory. Samples shall be reviewed for soil analysis and amendment recommendations. An analysis shall be submitted to the Landscape Architect and the City in writing. The analysis shall include a location map indicating where the soil samples were taken on the site. This procedure shall also apply to water samples and water analysis should this be necessary. Water analysis shall be done if requested by the Landscape Architect or the City.

3.2.2 All turf areas shall be graded to finish grade allowing for amendments, then incorporate the following amendments evenly into the top 4" – 6" of soil for each 1,000 square feet of area, unless test results require a change; do not add amendments until City and Landscape Architect have reviewed test results:

- Three (3) cubic yards of nitrolized shavings, five (5) cubic yards of organic amendment.
- 200 pounds Gro-Power Plus or approved equal.
- All rocks or unbroken soil clods over 1-1/2" diameter brought to surface shall be removed from the site.
- Soil deemed to have significant clay content (greater than 15% by weight) shall be amended accordingly prior to planning. (Specifics to be stated on a per project basis.) **It is the Landscape Contractor's responsibility to determine clay content of soil and report it to the City.**

Soil conditioners and amendment materials are not applicable and shall not be used with native plant material.

3.2.2 The thoroughness and completeness of the roto-tilling and incorporation of the soil conditioners/amendments shall be acceptable to the Landscape Architect and/or the City. Slopes 2:1 and steeper, or as indicated, omit soil conditioner application and tilling.

3.2.3 Fertilization:

Prior to application of liquid fertilizer, the Contractor shall receive training from the liquid fertilizer system supplier regarding liquid fertilizer equipment operation and application rates.

3.4 FINISH GRADING:

3.4.1 Finish grades shall be as indicated.

3.4.2 Finish grades shall be measured as the final water compacted and settled surface grades and shall be within + 0.1 foot of the spot elevations and grade lines indicated.

3.4.3 Finish grades shall be measured at the top surface of surface materials.

3.4.4 Molding and rounding of the grades shall be provided at all changes in slope.

3.4.5 Undulations and irregularities in the planting surfaces resulting from tillage, roto-tilling and other operations shall be leveled and floated out before planting operations are initiated.

3.4.6 Take precautions to protect and avoid damage to sprinkler heads, irrigation lines, and other underground utilities during grading and conditioning operations.

3.4.7 Final finish grades shall insure positive drainage of the site with surface drainage away from buildings, walls, and toward roadways, drains and catch basins.

3.4.8 Final grades shall be acceptable to the Landscape Architect and/or City before planting operations will be allowed to begin.

3.4.9 Planting surfaces shall be graded with no less than 1 percent surface slope for positive drainage.

3.5 PLANTING:

3.5.1 The layout of locations for plants and outlines of groundcover to be planted shall be approved on the site by the Landscape Architect and/or City, before their planting. All such locations shall be checked for possible interference with existing underground piping, before excavation of holes. If underground construction or utility lines are encountered in the excavation of planting areas, alternate locations for the plants may be selected by the Landscape Architect and/or City. Damage to existing utilities shall be the responsibility of the Contractor.

3.5.2 Trees shall be planted with the following clearances:

.1 Five (5) feet back from the edge of curbs;

.2 A minimum of five (5) feet from utility poles and fire hydrants;

.3 A minimum of eight (8) feet from canopies or awnings or building

.4 A minimum of five (5) feet from underground utilities;

.5 Trees should be kept back at least five (5) feet from the backside of sidewalks.

3.5.3 Shrubs shall be planted with the following clearances:

.1 2-1/2 to 3 feet from edge of roadway curb.

.2 Plantings should not occur in areas less than three feet wide unless approved by the Landscape Architect.

3.5.4 Planting Trees, Shrubs and Vines:

.1 Excavated holes shall have vertical sides with roughened surfaces and shall be of minimum sizes indicated. Holes shall be, in all cases, large enough to permit handling and planting without injury or breakage of root balls or roots.

.2 Excavation shall include the stripping and stacking of all acceptable soil encountered within the areas to be excavated for plant pits and planting beds. Protect areas that are to be trucked over and upon which soil is to be temporarily stacked pending its re-use for the fillings of holes, pits and beds.

.3 Excess soil generated from the planting holes shall be spread on the site as directed.

.4 Fill hole with water prior to installing plant.

.5 Plants in containers shall have the containers removed. Use care when removing plants to insure that plant root-balls are not damaged. All used containers shall be removed to the storage area or from the site daily.

.6 The plants shall be planted at approved locations with the specified conditioner and soil planting backfill.

.7 The plants shall be placed in the planting pits as indicated on the drawings. After setting the plants, the remaining backfill material shall be carefully tamped and settled around each root-ball to fill all voids.

.8 Each tree and shrub shall be placed in the center of the hole and shall be set plumb and held rigidly in position until the planting backfill has been tamped from around each root ball.

.9 All plants shall be set at such a level that after settling they bear the same relationship to the surrounding finish grade as they bore to the soil line grade in the container, unless otherwise indicated.

.10 No plant will be accepted if the root-ball is broken or cracked; before, during, or after the process of installation.

.11 All plants shall be thoroughly watered in to the full depth of each planting hole immediately after planting.

.12 All trees shall be staked as indicated on the drawings. The stakes shall be driven in plumb and secure. Special care shall be taken that the driving in of the stake does not damage the tree roots or root ball. Tree ties shall be fastened to each tree and stake by looping figure 8's with the inside diameter of the tie at 2 or 3 times the diameter of the tree and by tacking the back of the tie to the stake.

.13 Guying: All specimen trees 48 inch box and larger shall be guyed as indicated on the drawings.

.14 The staking and guying shall be accomplished in such a manner as to ensure the proper and healthy growth and the safety of the plants, property, and the public.

.15 The Contractor shall be responsible for all surface and subsurface drainage required which may affect his guarantee of the trees, shrubs, and vines.

.16 Pruning after planting shall be required on all trees, shrubs, and vines when necessary to provide the specified or approved standard shapes, form and

sizes characteristic to each plant. Pruning may include thinning, topping, and cutting and shall be under the direction of the Landscape Architect.

3.5.5 Sodded Turf:

.1 Irrigate areas to be sodded prior to installation of sod. Soil shall be damp to a depth of 2”.

.2 Lay sod within 2 days of delivery. Do not leave rolls in hot sun longer than necessary.

.3 Unroll sod carefully and place in staggered pattern of strips. Use a piece of 2” x 4” board to tamp each roll against the adjacent strips to eliminate joints and edges.

.4 Trim sod to conform to lawn shapes designated on planting plans.

.5 Irrigate thoroughly to provide good moisture penetration after sod is laid.

.6 Roll all sod areas with a Ryan Manufacturing Company or equivalent sod roller no later than 2 days after installation. Sod shall be flush with the finish grad of existing sidewalks, curbs, etc. A second rolling oil be necessary if the first does not meet with expectations.

.7 Do not lay boarder areas with less than full width sod. (Sod width – 12”, length – 48”).

3.6 HERBICIDE APPLICATION:

Pre-emergence herbicide shall be applied to groundcover areas only and in accordance with manufacturer's specifications. Do not apply in lawn areas. Landscape Architect and/or City shall be notified and present at the time of application.

3.7 CONCRETE MOW BANDS:

Concrete mow bands shall be installed as indicated and in accordance with Section 02750.

3.8 FIELD QUALITY CONTROL:

3.8.1 Inspection: Inspections herein specified shall be made by the Landscape Architect and/or City. The Contractor shall request inspection in writing, in advance of the time inspection is required.

3.8.2 Contractor shall be on the site at the time of each inspection. Inspection will be required for the following parts of the landscaping:

.1 Approval of plant materials.

.2 When planting, and all other indicated or specified landscaping, except the Maintenance Period, has been completed. Acceptance and written approval shall establish beginning of the Maintenance Period.

.3 Final inspection at the completion of the 90-day maintenance period. This inspection shall establish the beginning date for the one-year guarantee of all trees. A liquid fertilizer system supplier agronomist shall be present at the final inspection.

3.8.3 Acceptance: Upon completion of the final inspection, the Contractor will be notified in writing (1) whether the landscaping is acceptable; (2) of any requirements necessary for completion and acceptance.

3.9 CLEAN UP:

As landscaping progresses, maintain all areas in a neat manner and remove unsightly debris as necessary. After completion, remove debris and containers used in accomplishing landscaping. Sweep and clean all sidewalks, asphalt, and concrete areas adjacent to plantings.

END OF SECTION

03/04/2014

SECTION 03100

CONCRETE FORMWORK AND ACCESSORIES

PART 1 - GENERAL

1.1 SUMMARY:

1.1.1 Section Includes: Furnishing, installing, and removing of forms for cast-in-place concrete.

1.1.2 Related Documents: The Conditions of the Contract and Division 1 apply to this section as fully as if repeated herein.

1.2 REFERENCES:

The editions of the specifications and standards referenced herein, published by the following organizations, apply to the formwork only to the extent specified by the reference. Refer to Section 01422 for information concerning availability and use of references.

American Concrete Institute (ACI)
Corps of Engineers
U. S. Department of Commerce Product Standard (PS)
Western Wood Products Association (WWPA)
West Coast Lumber Inspection Bureau (WCLIB)

1.3 SUBMITTALS:

1.3.1 Product Data: Submit manufacturer's specifications for form ties, spreaders and coating.

1.3.2 Samples: Submit samples of form ties and spreaders.

1.3.3 Submittal procedures and quantities are specified in Division 1.

1.4 REGULATORY REQUIREMENTS:

Except as modified by the requirements specified herein or the details on the drawings, formwork shall conform to the 2010 California Building Code (CBC), Chapter 19 - Concrete.

PART 2 - PRODUCTS

2.1 MATERIALS:

2.1.1 Forms for Unexposed Concrete: Form concrete surfaces which will not be exposed in the finished structure with plywood, lumber, metal or other acceptable material.

.1 Lumber: Standard or better grade Douglas fir, meeting the requirements of WCLIB "Standard No. 17", Grading Rules for West Coast Lumber, or WWPA "Western Lumber Grading Rules 91". Use boards which are surfaced on at least 2 edges and one side for a tight fit.

.2 Plywood: B-B Plyform, Class I, Exterior grade meeting the requirements of PS 1-07 – Structural Plywood, 5/8 inch minimum thickness for 12 inch stud spacing and 3/4 inch minimum thickness for 16 inch stud spacing.

2.1.2 Forms for Exposed Finish Concrete: Construct formwork for exposed concrete surfaces with plywood, metal, metal-framed plywood faced or other acceptable panel-type materials, to provide continuous, straight, smooth, exposed surfaces. Furnish in largest practical sizes to minimize number of joints. Provide form material with sufficient thickness to withstand pressure of newly placed concrete without bow or deflection.

.1 Where an as cast surface finish is indicated, provide High Density Overlay Plyform Class I Exterior plywood meeting the requirements of PS1-07 – Structural Plywood.

.2 Where sacked, rubbed or sandblasted surface finish is indicated, provide B-B Plyform Class I Exterior plywood meeting the requirements of PS1-07 – Structural Plywood.

2.1.3 Cylindrical Columns: Form round section members with paper or fiber tubes, constructed of laminated plies using water-resistant adhesive with wax-impregnated exterior for weather and moisture protection. Tubes for columns to be exposed in the finish construction shall be seamless. Provide units with sufficient wall thickness to resist loads imposed to wet concrete without deformation.

2.1.4 Waffle Slab Forms: Steel or fiberglass domes meeting the requirements of CRSI "Code of Standard Practice" MSP 2-81.

2.1.5 Form Liners: Form architectural finish concrete surfaces with PVC or ABS plastic, fiber glass reinforced plastic or elastomeric urethane form liners of face design indicated.

2.1.6 Waterstops: PVC plastic of the shape and size indicated, and meeting the requirements of Corps of Engineers Specification CRD-C-572-89.

2.1.7 Framing, Studding and Bracing: "Standard" or "Construction" grade Douglas fir, rough or S4S, meeting the requirements of the WCLIB "Standard No. 17", Grading Rules for West Coast Lumber, or WWPA "Western Lumber Grading Rules 91".

2.1.8 Form Ties and Spreaders: Standard metal form clamp assembly, of type acting as spreaders and leaving no metal within 1 inch of concrete face. Inner tie rod shall be left in concrete when forms are removed. Wire ties or wood spreaders will not be permitted.

2.1.9 Form Coating: Non-grain raising and non-staining type that will not leave residual matter on surface of concrete or adversely affect proper bonding of subsequent application of other material applied to concrete surface. Coatings containing mineral oils or other nondrying ingredients will not be permitted. Form coating for use with form liners shall be of type recommended by form liner manufacturer.

2.1.10 Nails: Common wire, steel.

PART 3 - EXECUTION

3.1 DESIGN OF FORMWORK:

3.1.1 Carry out the engineering and construction of all formwork, shoring, and bracing, by and under the direction of the Contractor. The Contractor shall be held responsible for the engineering, construction, maintenance, and safety of all formwork during the entire construction period.

3.1.2 The formwork shall be designed for the loads and lateral pressures outlined in Part 3, Section 102, of ACI 347R-04, and lateral forces as specified by the CBC.

3.2 CONSTRUCTION:

3.2.1 Earth Forms: Earth forms may be used for footings only where the soil is firm and stable and the concrete will not be exposed to view. Where earth forms are to be used, excavations shall be cut neat and accurately to size for placing of concrete directly against the excavation. Construct wood edge strips at each side of trench at top to secure reinforcing and prevent trench from sloughing. Form sides of footings where earth sloughs. Earth forms shall be tamped firm and cleaned of all debris and loose material before depositing concrete.

3.2.2 Wood Forms: Construct forms of sound material to the correct shape and dimensions, mortar tight, and of sufficient strength, and so braced and tied together that the movement of men, equipment, materials, or placing and vibrating the concrete will not throw them out of exact shape under imposed loads. They shall be so constructed that they may be easily removed without damage to the concrete. Before concrete is placed in forms, carefully verify the horizontal and vertical position of the form and correct inaccuracies. Complete wedging and bracing in advance of placing of concrete.

3.2.3 Form Liners: Position liners on the forms so that grooves and joints are aligned with tie slots. Attach form liners to plywood forms with staples and to metal forms with sheet metal screws or pop rivets. Space fasteners not to exceed 4 inches on centers around the perimeter of each sheet. Place staples perpendicular to the edges. Install staples using a power staple with pressure regulated so that staple heads are driven flush with the surface. Seal joints between liners and joints at top and bottoms of liners with foam tape placed on the back side of liners.

3.2.4 Framing bracing, supporting members, and centering shall be of ample size and strength to safely carry, without deflection, dead and live loads to which forms may be subjected, and shall be spaced sufficiently close to prevent bulging or sagging of forms. Concrete out of line, level, or plumb will be cause for rejection of the whole construction affected.

3.2.5 Tolerances: Formwork shall be constructed so as to ensure that the concrete surfaces will conform to the tolerances of ACI 117-06. Camber formwork where necessary to compensate for anticipated deflections due to fresh concrete and construction loads.

3.2.6 Chamfered Corners: Chamfer exposed corners 3/4 inch, unless otherwise indicated. Provide molding in forms for all chamfering required.

3.2.7 Form Ties: Use ties of sufficient strength and in sufficient quantities to prevent spreading of the forms. Place ties at least 1 inch away from the finished surface of the concrete.

3.2.8 Arrangement: Arrange formwork to allow proper erection sequence and to permit form removal without damage to concrete.

3.2.9 Joints: Install construction joints, isolation joints, shrinkage control joints and expansion joints as approved. Coordinate location of construction joints, particularly those exposed to view at walls and columns, in advance of concrete pouring.

3.2.10 Embedded Piping and Rough Hardware:

.1 Coordinate with other trades who are required to fasten materials to formwork, or who are required to insert piping, boxes, bolts, anchors, inserts, or other rough hardware, within the forms.

.2 Locate conduits or pipes so as not to reduce the strength of the construction, and in no case place in a slab less than 3-1/2 inches thick except for local offsets. Do not bury conduit in a concrete slab with an outside diameter greater than 30 percent of the thickness of the slab, and do not place conduit under slab reinforcing steel, except for slab mesh. Place conduits parallel to roof slab span.

3.2.11 Frame openings in slabs for floor hinges where indicated or scheduled. Accurately frame openings to template furnished by floor hinge manufacturer for type of floor hinge specified. Chipping of concrete floors for installation of floor hinges will not be permitted.

3.2.12 Waterstops: Install waterstops to form a continuous diaphragm at each joint. Make provisions to support and protect exposed waterstops during progress of construction. Fabricate field joints in waterstops in accordance with manufacturer's printed instructions.

3.2.13 Coating of Forms: Thoroughly clean forms and coat with specified form coating before each use. Do not reuse forms for exposed construction which cannot be reconditioned to "like new" condition. Apply form coating to forms in accordance with the manufacturer's specifications. Apply form coating to forms before placing reinforcing steel.

3.2.14 Inspection: Before placing of concrete, and after placement of reinforcing steel in the forms, provide notification so that proper inspection can be made. Make such notification at least 2 working days in advance of placing concrete.

3.2.15 Rejection of Defective Work: Any movement or bellying of forms during construction or variations in excess of the tolerances specified will be considered just cause for the removal of such forms and, in addition, the concrete construction so affected. Reconstruct forms, place new concrete and required reinforcing steel at no additional cost to the Owner.

3.3 REMOVAL OF FORMS:

3.3.1 Formwork for walls, sides of beams, and other parts not supporting the weight of the concrete may be removed as soon as the concrete has hardened sufficiently to resist damage from removal operations, particularly when form ties will be bent by the removal operations, but not sooner than 24 hours after placing concrete.

3.3.2 Formwork for girder and beam soffits and above grade slabs and other parts that support the weight of concrete, shall remain in place until the concrete has reached its specified 28-day strength, unless otherwise specified or permitted.

3.3.3 When shores and other vertical supports are so arranged that the form facing material may be removed without loosening or disturbing the shores and supports, the facing material may be removed at an earlier age as specified or permitted. The shores and supports shall remain in place until the concrete has reached its specified 28-day strength, unless otherwise specified or permitted.

3.3.4 Whenever the formwork is removed during the curing period, cure the exposed concrete by one of the methods specified in Section 03300.

3.3.5 Construction loads exceeding the design loads shall not be imposed on any member unless it is properly shored and braced.

3.3.6 Use softwood wedges to release form faces from concrete. Do not pry with metal tool.

3.4 RESHORING:

3.4.1 When reshoring is permitted or required the operations shall be planned in advance and shall be subject to review.

3.4.2 Perform reshoring for the purpose of early form removal so that at no time will large areas of new construction be required to support their own weight. While reshoring is under way, no live loads shall be permitted on the new construction. Tighten reshores to carry their required loads but do not over tighten so that the new construction is over stressed. Reshores shall remain in place until the concrete has reached its specified 28-day strength, unless otherwise specified or permitted.

3.4.3 Floors supporting shores under wet concrete shall have at least one-half the load capacity of the shores above and shall be distributed in approximately the same pattern as those above. These reshores shall remain in place until the freshly-placed concrete has reached 75 percent of its specified 28 day strength, unless otherwise specified or permitted.

END OF SECTION

SECTION 03200

CONCRETE REINFORCEMENT

PART 1 - GENERAL

1.1 SUMMARY:

1.1.1 Section Includes: Reinforcing steel for cast-in-place concrete.

1.1.2 Related Documents: The Conditions of the Contract and Division 1 apply to this section as fully as if repeated herein.

1.2 REFERENCES:

The editions of the specifications and standards referenced herein, published by the following organizations, apply to the concrete reinforcement only to the extent specified by the reference. Refer to Section 01422 for information concerning availability and use of references.

American Concrete Institute (ACI)
American Society for Testing and Materials (ASTM)
Concrete Reinforcing Steel Institute (CRSI)
American Welding Society (AWS)

1.3 SUBMITTALS:

1.3.1 Shop Drawings: Submit shop and placement drawings of reinforcing steel for review only when deviations are made from Contract Drawings. Such deviations shall be identified.

.1 Placement drawings shall show the locations and spacing of reinforcing in the various parts of the structure with details as required, in accordance with ACI SP-66-88. Cutting and bending lists submitted without placement drawings will be returned without review as incomplete.

.2 Review shall not act to relieve the Contractor from responsibility for accuracy of the fabrication details and placing diagrams. Verify dimensions and locations before the preparation of shop drawings.

1.3.2 Product Data: Submit mill affidavits, stating the grades and physical and chemical properties of the reinforcing steel, and conformance with ASTM Specifications, before delivery of the steel to the project site.

1.3.3 Samples for Architectural Exposed Concrete: Submit 5 samples of each type of reinforcing chair, spacer, tie wire and other accessories.

1.3.4 Submittal procedures and quantities are specified in Division 1.

1.4 QUALITY ASSURANCE:

1.4.1 Regulatory Requirements: Except as modified by the requirements specified herein or the details indicated, concrete reinforcing shall conform to the 2010 California Building Code (CBC), Chapter 19A - Concrete.

1.4.2 Qualifications: Welders and welding procedures shall be qualified in accordance with the latest edition of AWS D1.4. Welders qualified by another employer and welding procedures previously qualified by others may be accepted as permitted by the latest edition of AWS D1.4. Qualification tests, when required, shall be performed at the Project site and the Contractor shall notify the Architect at least 24 hours before conducting the tests.

1.5 DELIVERY, STORAGE, AND HANDLING:

1.5.1 Delivery: Deliver reinforcement bundled and tagged to identify placement and certify testing.

1.5.2 Transport reinforcing steel to the construction site, stored and covered in a manner which will insure that no damage occurs to it from moisture, dirt, grease, or other cause that might impair bond to concrete. Store a sufficient supply of approved reinforcing steel on the construction site at all times to insure that there will be no delay of the construction. Maintain identification of steel after bundles are broken.

1.5.3 Store welding electrodes in accordance with AWS and the electrode manufacturer. Do not use electrodes that have been wetted.

1.6 COORDINATION:

Review architectural, structural, mechanical, and electrical drawings for anchor bolt schedules and locations, anchors, inserts, conduits, sleeves, and other items which are required to be cast in concrete, and make necessary provisions as required so that reinforcing steel will not interfere with the placement of such embedded items.

PART 2 - PRODUCTS

2.1 MATERIALS:

2.1.1 Reinforcing Bars:

.1 New, deformed, billet steel bars, complying with ASTM A 615, grades as indicated.

.2 Where welding of reinforcing steel is required or approved, provide deformed, low alloy steel bars complying with ASTM A 706, Grade 60. At the Contractor's option

deformed billet steel bars complying with ASTM A 615, Grade 60, may be used provided they meet the following requirements:

a. The carbon equivalent (C.E.) of reinforcing bars or splice material shall be calculated from the chemical composition as shown in the mill report by the following formula:

   C.E. = %C + %Mn/6 + %Cu/40 + %Ni/20 + %Cr/10 - %Mo/50 - %V/10

b. If mill test reports are not available, chemical analysis shall be made of bars representative of the bars to be welded. Bars with a C.E. above 0.75 shall not be welded.

2.1.2 Welded Wire Fabric: New welded steel wire fabric, complying with ASTM A 185 for plain type, and ASTM A 497 for deformed type, gage and center-to-center spacing as indicated.

2.1.3 Accessories: Provide reinforcement accessories, consisting of spacers, chairs, ties, and similar items as required for spacing, assembling, and supporting reinforcement in place. Provide accessories fabricated from galvanized steel or approved plastic accessories, conforming to the applicable requirements of the CRSI MSP-1-90.

2.1.4 Reinforcing Supports for Architectural Exposed Concrete: Devices touching exposed surfaces shall be high density plastic with maximum 1/8 inch round feet where in contact with form surfaces. Chairs shall be laid out in-line with the edge surface of the formwork. Color of plastic shall match the finished concrete.

2.1.5 Tie Wire: 16 gage or heavier, where indicated or specified, black or galvanized steel wire, meeting the requirements of ASTM A 82.

2.1.6 Welding Electrodes: AWS A5.1, grade E70XX for welding grade 40 reinforcing steel and AWS A5.5, grade E90XX for welding grade 60 reinforcing steel.

2.1.7 Mechanical Splicing Devices: Acceptable products or equal:

Gateway Erectors, Inc.; G-Loc Splices
Erico Products, Inc.; Erico Speed-Sleeve Splices
Erico Products, Inc.; Cadweld Reinforcing Bar Splices

PART 3 - EXECUTION

3.1 FABRICATION:

3.1.1 Fabricate steel reinforcement in accordance with the details indicated. Where specific details are not indicated or noted, comply with the applicable requirements of 2010 CBC Section 1704A; and ACI 318.

3.1.2 Bend, cut, and place bars accurately, as indicated. Bend bars cold; heating of bars will not be permitted. Do not bend or straighten bars in any manner that will injure the material.

3.2 PLACING:

3.2.1 General: Place reinforcing steel in accordance with the drawings and the applicable requirements of the CBC and ACI 315R-04. Install reinforcement accurately and secure against movement, particularly under the weight of workmen and the placement of concrete.

3.2.2 Reinforcing Supports: Support bars and welded wire fabric larger than 8 gage on metal chairs or spacers on metal hangers, accurately placed and securely fastened to steel reinforcement in place. Support legs of accessories in forms without embedding in form surface. Space chairs and accessories in conformance with CRSI MSP-1-90. No wood will be permitted inside forms. Precast concrete cubes may be used to support footing and slab on ground reinforcing.

3.2.3 Placing and Tying: Set reinforcing in place, space, and rigidly and securely tie or wire with 16 gage steel tie wire at splices and at crossing points and intersections in the position indicated, or as directed. Point ends of wire away from forms.

3.2.4 Spacing: Space bars as indicated. Where not indicated, the clear spacing for main longitudinal column reinforcement shall be not less than 1.5 times the nominal bar diameter, or 1-1/2 inches, or 1-1/3 times the maximum size aggregate, whichever is greater. For other parallel bars, where spacing is not indicated, the minimum clear spacing shall not be less than the nominal bar diameter, or one inch, or 1-1/3 times the maximum size aggregate, whichever is less. The clear distance limitations above also apply between the bars being spliced at a contact lap splice and adjacent bars.

3.2.5 Splices: Except for temperature bars in slabs and horizontal wall reinforcing, no splicing will be allowed for reinforcing bars unless detailed locations are indicated, or approval is given. Splices shall comply with ACI 318-08.

.1 Lapped splices shall not be used for bars larger than No. 11. Stagger lapped splices for horizontal wall reinforcing and slab temperature bars by the required lap splice length minimum.

.2 Welding of reinforcing steel will not be permitted except as specifically approved or detailed. Welding shall comply with 2010 CBC Section 1704A.4.2 and latest edition of AWS D1.4 using specified low hydrogen electrodes. No welds shall be made at bends in reinforcing bars unless specifically approved by the Architect.

a. Preheat and Post Cooling Requirements: All reinforcing steel shall be preheated before welding, except that steel for which special qualification tests are performed. The preheat temperature shall be

provided in that part of the reinforcing steel that is within 6 inches of either side of the joint.

b. Arc Strikes: Arc strikes on reinforcing steel outside the area of permanent welds shall be avoided. Crack or blemishes resulting from accidental arc strikes shall be ground to a smooth contour and checked to insure soundness.

c. Tack Welds: Tack welds which do not become a part of a permanent weld are prohibited unless authorized by the Architect and approved by the Governing Authority.

.3 Make mechanical butt splices in accordance with the splicing device manufacturer's recommendations. Mechanical splices shall develop 125 percent of the specified minimum yield tensile strength of the spliced bars.

3.2.6 Welded Wire Fabric: Furnish wire fabric in as long lengths as practical and wire at laps and splices. Laps shall be one full spacing of the cross wires plus 2 inches at splices. Supply welded wire fabric in flat sheets

3.2.7 Dowels: Securely tie dowels in place before concrete is deposited. In the event there are no bars in position to which dowels may be tied, add a No. 3 minimum to provide proper support and anchorage. Bending of dowels after placement of concrete will not be permitted unless approval is obtained. Protect dowels extended for future construction from weather exposure. Compliance with safety law requirements for extended dowel is required.

3.2.8 Cleaning: Reinforcement, at time of pour, shall be free of coatings that would impair bond to concrete.

3.3 FIELD QUALITY CONTROL:

3.3.1 Provide notification at least 2 working days ahead of each concrete pour, do not place any concrete until all reinforcing steel has been installed and reviewed. Complete all reinforcing in every way by the end of the working day before concrete placing.

3.3.2 Testing and inspections are specified in Division 1.

3.3.3 Special inspector will inspect all reinforcement for concrete work for size, dimensions, locations and proper placement. Special inspector shall be present during welding of all reinforcing steel.

3.3.4 Do not use shop or placement drawings for verifying as placed reinforcing in the field. The as placed reinforcing shall be checked with the approved set of design drawings.

3.4 DEFECTIVE WORK:

3.4.1 The following reinforcing steel construction will be considered defective. Remove defective reinforcing steel and provide new steel.

.1 Bars with kinks or bends not indicated.

.2 Bars injured due to bending or straightening.

.3 Bars heated for bending.

.4 Reinforcement not placed in accordance with the drawings or specifications.

3.5 RECORD DRAWINGS:

After all steel has been placed, correct or revise the shop and placement diagrams to correspond with changes made in the field, and submit as part of record drawings specified in Division 1.

END OF SECTION

03/04/2014

SECTION 03300

CAST-IN-PLACE CONCRETE

PART 1 - GENERAL

1.1 SUMMARY:

1.1.1 Section Includes: Cast-in-place concrete for structures. Concrete for curbs, gutters, sidewalks, and other exterior concrete paving work is specified in Section 02750.

1.1.2 Related Documents: The Conditions of the Contract and Division 1 apply to this section as fully as if repeated herein.

1.2 REFERENCES:

The editions of the specifications and standards referenced herein, published by the following organizations, apply to the cast-in-place concrete only to the extent specified by the reference. Refer to Section 01422 for information concerning availability and use of references.

American Concrete Institute (ACI)
American Society for Testing and Materials (ASTM)

1.3 SUBMITTALS:

1.3.1 Product Data:

.1 Submit certificates of compliance for portland cement.

.2 Submit manufacturers technical literature for admixtures, curing compounds, expansion joint filler, sealer and chemical hardener.

1.3.2 Submittal procedures and quantities are specified in Division 1.

1.4 QUALITY ASSURANCE:

1.4.1 Regulatory Requirements: Except as modified by the requirements specified herein or the details indicated, concrete construction shall conform to the 2010 California Building Code (CBC), Chapter 19 - Concrete.

1.4.2 Project Mock-Up:

.1 Abrasive Blast Finish: Before finishing of abrasive blasted concrete, erect a sample panel 6 feet long by 4 feet high for finishing.

.2 Integrally Colored Concrete: Before installation of integrally colored concrete, erect a sample panel 6 feet long by 4 feet high showing the proposed color range, texture, finish, and workmanship for integrally colored concrete work. Upon approval, the panel shall become the standard of comparison for all integrally colored concrete work. After all integrally colored concrete work has been completed and approved, remove the sample panel and dispose of debris off the site.

PART 2 - PRODUCTS

2.1 MATERIALS:

2.1.1 Portland Cement: ASTM C 150, Type V, unless otherwise specified.

2.1.2 Portland cement concrete for structures shall conform to the provisions in Section 201 of the Standard Specifications except as modified herein. All cast-in-place concrete structures shall be cured by the water method except where curing compound method is approved by the Engineer.

2.1.3 Pozzolan: ASTM C 618, Type F or C. Limit use of pozzolan to not more than 25 percent of cement content by weight.

2.1.4 Regular Weight Concrete Aggregates: ASTM C 33. Use ASTM C 227 to determine alkali reactivity of the aggregates as specified therein, the alkali reactivity shall be "innocuous" as determined by ASTM C 289.

.1 Fine Aggregate: Washed clean, uniformly screen graded, and contain not more than 2 percent by weight of deleterious materials such as shale, schist, alkali, clay lumps, earth, loam, mica or similar materials. Uniformly grade fine aggregate from fine to coarse.

.2 Coarse Aggregate: Clean, hard, crushed rock or washed gravel, free from organic materials or soft or friable materials, contain not more than 2 percent by weight of shale or cherty material and not more than 15 percent by weight of elongated fragments.

2.1.5 Lightweight Concrete Aggregates: ASTM C 330.

2.1.6 Admixtures: Chemical admixtures may be used by the contractor if approved by the Engineer and shall conform to Section 201-1.2.4 – Admixtures.

.1 Water Reducing Admixture: ASTM C 494, Type A. Acceptable products or equal:

Cormix, Inc.; PSI N
Euclid Chemical Co.; Eucon WR 75
W.R. Grace & Co.; WRDA
Master Builders, Inc.; Pozzolith Normal

Sika Corp.; Plastocrete 161

.2 Water Reducing and Accelerating Admixture: ASTM C 494, Type E. Acceptable products or equal:

Cormix, Inc.; Gilco Accelerator
Euclid Chemical Co.; Accelguard 90
W.R. Grace & Co.; Duraset
Master Builders, Inc.; Pozzutec 20

.3 High Range Water Reducing Admixture: ASTM C 494, Type F. Acceptable products or equal:

Cormix, Inc.; PSI Super
Euclid Chemical Co.; Eucon 37
W.R. Grace & Co.; Daracem
Master Builders, Inc.; Rheobuild
Sika Corp.; Sikament 300

.4 Air-Entraining Agent: ASTM C 260. Acceptable products or equal:

Cormix, Inc.; Air-Tite
Euclid Chemical Co.; Air-Mix
W.R. Grace & Co.; Darex AEA
Master Builders, Inc.; MB-VR
Sika Corp.; AER

.5 Color Admixture for Integrally Colored Concrete: Colors to be selected by the Architect from manufacturer's standards. Acceptable products or equal:

Admixtures, Inc.; Colorful
L.M. Scofield; Chromix Admixture

2.1.7 Water Used in Mixing Concrete: Potable, clean and free from deleterious amounts of acid, alkalis, organic or other materials.

2.1.8 Curing Membrane: Non-staining paper meeting the requirements of ASTM C 171, or 6 mil thick polyethylene film.

2.1.9 Curing Compound: Types as follows subject to the limitations specified elsewhere in this Section:

.1 Non-film Forming Type: Clear, water-based solution that penetrates below the concrete surface to react with free lime to seal, harden and dust proof concrete surfaces. When tested in accordance with ASTM C 156, compound shall restrict the loss of water to not more than 0.55 kg per square meter. Acceptable products or equal:

Burke Corp.; Res-X Silicate

Dayton-Superior; Day-Chem Sil-Cure (J13)
Euclid Chemical Co.; Cure & Hard
W. R. Meadows; Cure Hard
Nox-Crete, Inc.; Bro-Cure
Sonneborn Building Products; Sonosil

.2 Dissipating Resin Type: Water based, resin compound containing no wax, paraffin, gum or oil, designed to cure fresh concrete and complying with ASTM C 309, Type I-D, Class B. Acceptable products or equal:

Burke Corp.; Aqua Resin Cure
Euclid Chemical Co.; Kurez VOX
W. R. Meadows; 1100 Clear
Nox-Crete, Inc.; Resin Cure E
Symons Corp.; Resi-Chem Clear Cure
Sonneborn Building Products; Sonocure

.3 Pigmented Type: A water based blend of pure waxes, polymers, additives, and alkali resistant pigments as recommended by the manufacturer of the coloring admixture. When tested in accordance with ASTM C 156, compound shall restrict the loss of water to not more than 0.55 kg per square meter. Acceptable products or equal:

L.M. Scofield Co.; Lithochrome Colorwax, Water Base
Admixtures, Inc.; Colorfull Cure-Sealer

.4 Curing Sealer: Water based acrylic resin compound containing not less than 12 percent solids, designed to cure, seal and dustproof concrete floors, complying with ASTM C 309, Type I, Class B. Acceptable products or equal:

Burke Corp.; Spartan Cote WB
Dayton-Superior; Safe Cure & Seal (J-18)
Euclid Chemical Co.; Aqua-Cure VOX
W. R. Meadows; Intex
Nox-Crete, Inc.; Cure & Seal 1200E
Symons Corp.; Cure & Seal 12% Emulsion
Sonneborn Building Products; Kure-N-Seal WB

2.1.10 Expansion Joint Filler: Premolded, of sizes and thicknesses indicated, meeting the requirements of ASTM D 1751.

2.1.11 Expansion Joint Sealing Compound: Expansion joint sealant and backer rod is specified in Section 07900.

2.1.12 Vapor Barrier: 10 mil polyethylene meeting the requirements of ASTM D 2103.

2.1.13 Sand for Use With Vapor Barrier Under Concrete: Washed fine aggregate meeting the requirements of ASTM C 33.

2.1.14 Clear Sealer Hardener: Colorless aqueous solution containing a blend of magnesium fluosilicate and zinc fluosilicate combined with a wetting agent, containing not less than 2 pounds of fluosilicates per gallon. Acceptable products or equal:

Burke Corp.; Burk-O-Lith
Dayton-Superior; Fluosilicate (J-15)
Euclid Chemical Co.; Surfhard
W. R. Meadows; Penalith
Nox-Crete Chemicals Inc.; Harbeton
Symons Corp.; Symons Fluosilicate
Sonneborn Building Products; Lapidolith
Protex Industries; Lithoplate

2.1.15 Abrasive Aggregate: Factory graded and packaged fused aluminum oxide grits or crushed emery containing not less than 40 percent aluminum oxide and not less than 25 percent ferric oxide. Provide material which are rust-proof, non-glazing and unaffected by freezing, moisture and cleaning materials.

2.1.16 Leveling Compound: Cementitious, single component, non-shrink, self-leveling underlayment for concrete floors. Acceptable products or equal:

Ardex; V-800
Burke Corp.; Flo-Tru
Dayton-Superior; LeveLayer II
Euclid Chemical Co.; Flo-Top
Symons Corp.; Floor Top
Sonneborn Building Products; Sonoflow

2.1.17 Fly Ash: Fly ash shall not be used in the concrete for this Project.

2.1.18 Physical Requirements: Street surface improvements (curb and gutter, curb, gutter, drive approach, parkway drain, spandrels, cross gutters): Maximum slump 4”.

2.2 MIXES:

2.2.1 Concrete Proportions and Properties:

.1 Minimum Compressive Strengths at 28 Days: As indicated.

.2 Maximum Slumps: 3 inches for toppings on precast tees and metal deck, 3 inches for beams, pile caps, slabs, footings and other horizontal members, 4 inches for water tanks, walls, columns and other vertical members. Slump specified above may be increased to a maximum of 7 inches by addition of water reducing admixture to 2-inch to 3-inch slump concrete.

.3 Maximum Size Aggregate: In no case shall the maximum aggregate size used exceed 20 percent of a member's thickness, nor shall it exceed 3/4 of the clear

spacing between reinforcing, except that in columns and piers it shall not exceed 2/3 of the clear distance between reinforcement. In addition, it shall never exceed the size indicated for the following:

a. Slabs 6 inches and less in thickness: 1 inch.

b. Walls less than 8 inches in thickness: 1 inch.

c. Toppings over Steel Pan Stair Systems, Precast Tees, and Metal Deck: 3/8 inch.

d. Other members: 1-1/2 inches.

.4 Admixtures: Admixtures shall be added in accordance with the manufacturer's instruction.

a. Water reducing admixtures may be used at the Contractor’s option to improve workability and finishing of low slump concrete mixes.

b. Water reducing, accelerating admixtures may be used, at the Contractor's option, to achieve early strength for earlier form removal.

c. High range water reducing accelerating admixtures may be used, at the Contractor's option, to improve workability and finishing of low slump concrete mixes and to produce flowable concrete for pumping. Dosages shall be determined by the manufacturer after testing of cements and aggregates to be used.

d. Air entraining admixture may be used, at the Contractor's option, to improve workability of low slump concrete mixes.

e. Color Admixture for Integrally Colored Concrete: Colors will be selected by the Architect from manufacturer's standards. Acceptable products or equal:

Admixtures, Inc.; Colorfull
L.M. Scofield; Chromix Admixture

2.2.2 Mixing:

.1 Use ready mixed concrete, mixed and transported in accordance with ASTM C 94.

.2 Retempering: Mix concrete only in quantities for immediate use. Discard concrete which has set, do not retemper.

.3 Indiscriminate addition of water to increase slump is prohibited. When concrete arrives at the project with slump below that suitable for placing, water may be

added only if neither the maximum permissible water-cement ratio nor the maximum slump is exceeded. Incorporate the water by additional mixing equal to at least half of the total mixing required. Accompany addition of water above that permitted by the limitation of water-cement ratio by a quantity of cement sufficient to maintain the proper water-cement ratio. Obtain the Architect's approval.

.4 Integrally Colored Concrete: Before placing colored admixture in the mixer, clean the drum thoroughly, and add approximately 40 gallons of mix water and a portion of the aggregate.

2.3 SOURCE QUALITY CONTROL:

2.3.1 General: Submit mill tests and manufacturer's certification of compliance with ASTM Specifications to the Inspector in lieu of testing of cement and aggregate analysis.

2.3.2 Mix Designs:

.1 Mix designs shall be made by a recognized Testing Laboratory under the supervision of a California Registered Civil Engineer, who shall determine mix designs to fulfill the specified requirements for strength, aggregate size and workability of concrete, and such designs shall be used in proportioning all structural concrete. Mix designs shall bear the signature of the California Registered Engineer. Two copies of the mix designs shall be submitted to the Architect as a matter of record.

.2 Make mix designs in accordance with ACI 318-08 for regular concrete and ACI 211.2-91 for lightweight structural concrete.

.3 Consider cover and clear distances between reinforcing bars indicated in determining the aggregate size for mix designs, which may result in an aggregate size smaller than the maximum aggregate size specified elsewhere.

.4 Include a list of where the mix designs are to be used, with the designs.

.5 Do not consider review unqualified approval. Review will not relieve the Contractor of his responsibility to furnish concrete of proper consistency and specified strengths.

2.4 SAND LAYING COURSE:

Elastomeric sand with 100 percent passing #4 sieve and a maximum of 3 percent passing #200 sieve size. Sand shall not have any clay content.

PART 3 - EXECUTION

3.1 CONVEYING AND PLACING CONCRETE:

3.1.1 Notification: Notify the Architect at least 2 working days in advance of placing concrete.

3.1.2 Soil bottoms for footings and slabs shall be inspected by the Soils Engineer before placing concrete.

3.1.3 Preparation Before Placing:

.1 Remove hardened concrete and foreign materials from the inner surfaces of the conveying equipment.

.2 Formwork shall have been completed; excess water shall have been removed; reinforcement shall have been secured in place; expansion joint material, anchors, and other embedded items shall have been positioned; and the entire preparation shall have been approved on the day before the placing of concrete.

.3 Sprinkle semi-porous subgrades sufficiently to eliminate suction and seal extremely porous subgrades in an approved manner.

.4 Before placing any concrete, thoroughly clean forms, wash out with water, and make tight. Before reinforcing steel is placed on top of or adjacent to forms which have been sealed, wipe off the surface sealer so that none may be tracked over, or in any other way come in contact with the reinforcing steel. Clean bottoms of forms and wet down before placing concrete.

.5 Remove incrustations removed from forms and reinforcing steel at construction joints.

.6 Depositing Against Other Concrete: Before depositing new concrete on or against hardened concrete, retighten forms and roughen surface of hardened concrete as follows. Concrete which has been placed longer than 3-1/2 hours, but less than 6-1/2 hours, prepare by removing laitance from concrete by wire brushing. Concrete which has been placed longer than 6-1/2 hours, prepare by sandblasting to roughen surfaces. Thoroughly clean concrete of foreign matter and laitance, and moisten with water.

3.1.4 Placement:

.1 Handle concrete from the mixer to the place of final deposit as rapidly as practical by methods which will prevent separation or loss of ingredients.

.2 Use conveying equipment of size and design to ensure a continuous flow of concrete at the delivery end.

.3 Deposit concrete continuously, or in layers of such thickness that no concrete will be deposited on concrete which has hardened sufficiently to cause the formation of seams, planes, or weakness within the section, or visible pour lines in the finish surface.

.4 Consolidate concrete by vibrating, spading, rodding, or forking, so that the concrete is thoroughly worked around the reinforcement, around the embedded items, and into corners of forms, eliminating air and stone pockets which may cause honeycombing, pitting, or planes of weakness. Use mechanical vibrators having a minimum frequency of 7,000 rpm. Do not over vibrate or use vibrators to transport concrete within forms. Insert vibrators and withdraw at many points, from 18 to 30 inches apart, for 5 to 15 seconds duration. Keep a spare vibrator on the project site during concrete placing operations. Give particular care to exposed concrete surfaces.

3.1.5 Flatwork:

.1 Set edge forms and intermediate screed strips accurately to produce the designed elevations and contours in the finished surface, and sufficiently strong to support vibrating bridge screeds or roller pipe screeds if the nature of the finish specified requires the use of such equipment. Align concrete surface to the contours of screed strips by the use of strike-off templates or approved compacting type screeds.

.2 When the formwork is cambered, set screeds to a like camber to maintain the proper concrete thickness.

.3 Locate and detail joints in slabs on grade as indicated.

.4 Thoroughly consolidate concrete slabs. Use internal vibration along the bulkheads of slabs on grade. Obtain consolidation of slabs and floors with vibrating bridge screeds, roller pipe screeds, or other approved means. Concrete to be consolidated shall be as dry as practical and the surfaces thereof shall not be manipulated before the finishing operations.

3.2 REPAIR OF SURFACE DEFECTS:

3.2.1 Repair of Surface Defects: Fill form tie holes and patch repairable defective areas immediately after the forms have been removed. Remove fins and burrs.

3.2.2 Removal: After forms have been removed, remove and replace concrete which is not formed as indicated, or which is out of alignment or level beyond required tolerances. Defective surfaces may be repaired and patched in accordance with the following procedure. All conditions requiring patches and completed patches will be inspected. Remove and replace patches which have been disapproved as not restoring the quality and appearance of the surrounding construction so as to match the surrounding construction.

3.2.3 Repair Procedure:

.1 Remove honeycombed and other defective concrete to sound concrete, but in no case to a depth of less than 1 inch. Dampen the area to be patched and an area of at least 6 inches wide surrounding it to prevent absorption of water from the patching mortar. Mix a bond of neat portland cement and water, and, if permitted, some fine sand passing a No. 30 sieve, to the consistency of thick cream and then brush into the surface. Other concrete bonding agents may be used when approved.

.2 Make the patching mixture of the same material and of approximately the same proportions as used for the concrete, except omit the coarse aggregate. Mix mortar using not more than 1 part cement to 2-1/2 parts sand by damp loose volume. Substitute white portland cement for a part of the gray portland cement on exposed concrete in order to produce a color matching the color of the surrounding concrete, as determined by a trial patch.

.3 The quantity of mixing water shall be no more than necessary for handling and placing. Mix patching mortar in advance and allow to stand with frequent manipulation with a trowel, without addition of water, until it has reached the stiffest consistency that will permit placing.

.4 After surface water has evaporated from the areas to be patched, brush the bond coat into the surface. When the bond coat begins to lose the water sheen, apply the premixed patching mortar. Thoroughly consolidate the mortar into place and strike off so as to leave the patch slightly higher than the surrounding surface. To permit initial shrinkage, leave patch undisturbed for at least one hour before final finishing. Keep the patched area damp for 7 days.

3.2.4 Before proceeding with patch work, establish trial patch areas to develop the approved patching color and the method of applying and surface-texturing the patching material.

3.3 CONCRETE FINISHES:

3.3.1 Finishes for Formed Surfaces: Provide sacked, rubbed, and abrasive blasted finishes where indicated. Provide as-cast surfaces where no other finish is indicated.

.1 As-Cast Surfaces: After surface defects have been repaired, as specified, leave concrete with finish imparted by forms.

.2 Sacked Finish: Remove fins, rough spots, stains and hardened mortar by carefully rubbing with a fine abrasive stone to a smooth even surface. Remove excess form sealer by carefully scrubbing surface with 5 to 10 percent solution of muriatic acid. Fill holes or irregular surfaces. Apply a slurry proportioned one part cement to 1-1/2 parts sand, passing a No. 16 sieve, by damp loose volume, mixed with sufficient water to form a grout having the consistency of thick paint. Before applying slurry to surfaces, dampen concrete sufficiently to prevent water absorption. Spread slurry over surfaces with a clean sponge rubber float to completely fill holes and imperfections. Float surface vigorously, and while slurry is still plastic remove excess grout. Allow to dry then rub

with burlap to completely remove dry grout so that no visible grout film remains. Complete the entire cleaning operation for any area the day it is started.

.3 Rubbed Finish: Not later than one day after form removal, moisten concrete surfaces and rub with carborundum brick or other abrasive until a uniform color and texture is produced. Do not apply cement grout other than the cement paste drawn from the concrete by the rubbing process.

.4 Sandblasted Finish:

a. Do sandblasting with wet sand method using proper equipment, abrasive and skilled workmen, for sandblast finish to match existing column and fascia sandblast finish.

(1) Sandblast as soon as possible after removal of forms, so as to expose a uniform pattern of the expanded course aggregate or to a minimum uniform depth of 1/8 inch.

b. Makes passes with nozzle in both directions so pattern from blast does not appear on concrete. Sand and water shall emerge from the nozzle in a steady uninterrupted flow.

c. Sandblasted surfaces shall be thoroughly washed down with clean water immediately after the nozzleman has finished blasting the area.

d. Do not round-off concrete corners any more than absolutely necessary.

e. Collect sand and waste from concrete promptly so it does not encumber construction operations or enter drains.

f. All sandblasting operations shall comply with State and County Air Pollution Ordinances.

3.3.2 Finishes for Flatwork:

.1 Floated Finish: Provide floated finish for subfloors for ceramic and quarry tile and for interior stair treads and landings. After concrete has been placed, struck off, consolidated and leveled, do not work concrete further until ready for floating. Begin floating when water sheen has disappeared, or when mix has stiffened sufficiently to permit proper operation of a power-driven float. Consolidate surface with power-driven floats of impact type. Hand float with wood or cork-faced floats in locations inaccessible to power-driven machine. Recheck trueness of surface at this stage with a 10 foot straight-edge applied at not less than two different angles. Cut down high spots and fill low spots during this procedure to produce planes checking true under the straightedge in all directions, with tolerances not exceeding those specified below. Refloat slab immediately to a uniform, smooth, granular texture.

a. Tolerances for floors indicated to receive thin set ceramic tile

applications shall not exceed 1/8 inch in 12 feet.

b. Tolerances for all other floors shall not exceed 1/4 inch in 12 feet.

c. Finish floors that do not meet specified tolerances shall be leveled to within the specified tolerances using a leveling compound.

.2 Troweled Finish: Provide troweled finish for interior concrete finish floors and subfloors for resilient flooring and carpet. Finish surface with impact power floats, as specified above where applicable, then with power trowels, and finally with hand trowels. Perform first troweling after power floating with a power trowel to produce a smooth surface which is relatively free of defects but which may still contain some trowel marks. Perform additional trowelings by hand after surface has hardened sufficiently. Perform final troweling when a ringing sound is produced as trowel is moved over surface. Thoroughly consolidate surface by hand troweling operations. Finished surface shall be free of trowel marks and shall be uniform in texture and appearance. On surfaces intended to support floor covering, remove by grinding, defects of sufficient magnitude to show through floor covering.

.3 Edge and Joint Finish: Use standard tools to produce rounded edge corners and intermediate line scoring.

.4 Mark-Off Lines: Form mark-off lines with curved edging tool, neat and true to line, uniform throughout. Conform to markings indicated.

.5 Chemical Hardener: Remove dirt, dust, oil, grease, asphalt, paint and other foreign matter from the concrete surface. Damp cure concrete, do not cure with curing compound. Apply hardener using 3 coats allowing 24 hours between coats. Apply first coat at 1/3 strength, second coat at 1/2 strength and final coat at 2/3 strength. Use manufacturer's recommended application rates. After final coat is dry, remove surplus hardener by scrubbing and mopping with water.

.6 Abrasive Aggregate Finish: Provide abrasive aggregate as indicated on the Drawings. Soak aggregate for 10 minutes in clean water, drain off surplus water, sprinkle uniformly by hand at rate of 0.9 pounds per square foot of concrete surface. Wood float, trowel-tamp or roll into concrete.

.7 Finishes for exterior concrete site construction are specified in Section 02750.

3.4 PROTECTION AND CURING:

3.4.1 General: Protect freshly deposited concrete from premature drying and excessively hot or cold temperatures, and maintain without drying at a relatively constant temperature for the period of time necessary for the hydration of the cement and proper hardening of the concrete.

3.4.2 Initial Curing: Initial curing shall immediately follow the finishing operation. Keep concrete continuously moist at least overnight. Use one of the following materials or methods:

.1 Keep forms heated by the sun and all wood forms in contact with the concrete continuously wet.

.2 Ponding or continuous sprinkling on horizontal surfaces.

.3 Absorptive mat or fabric kept continuously wet.

.4 Curing Compounds: Apply compounds in accordance with the recommendations of the manufacturer.

a. On floors indicated to receive sealer, apply curing sealer.

b. Where possible, do not use curing compounds on surfaces indicated to receive ceramic tile, bonded terrazzo, cementitious floor toppings, liquid or trowel applied flooring, adhesively applied resilient flooring or carpet, paint, anti-graffiti coatings, or similar products required to be adhered to the concrete surface. Where necessary, apply non-film forming compound, or dissipating resin compound. If dissipating resin type compound is used, concrete surfaces shall be tested to ensure complete dissipation prior to application of bonded materials. If residual compound is found, the residual compound shall be removed by sandblasting, bead blasting, or chemical scrubbing.

c. On architectural concrete, use clear, non-yellowing compound.

d. On integrally colored concrete and dry shake colored toppings, use pigmented curing compound.

e. On all other concrete surfaces, use dissipating resin compound.

3.4.3 Final Curing: Immediately following the initial curing and before the concrete has dried, accomplish additional curing by one of the following materials or methods:

.1 Continuing the method used in initial curing.

.2 Waterproof paper or other moisture-retaining coverings.

3.4.4 Duration of Curing: Continue the final curing until the cumulative number of days or fractions thereof, not necessarily consecutive, during which temperature of the air in contact with the concrete is below 50 degrees F has totaled 7 days. If high early strength of concrete has been used, continue the final curing for a total of 3 days. Rapid drying at the end of the curing period shall be prevented.

3.4.5 Protection from Mechanical Injury: During the curing period, protect the concrete from damaging mechanical disturbances, particularly load stresses, heavy shock, and excessive vibration. Protect finished concrete surfaces from damage caused by construction equipment, materials, or methods, and by rain or running water. Self-supporting structures shall not be loaded in such a way as to overstress the concrete.

3.5 EXPANSION JOINTS:

Provide premolded expansion joints to full depth of slabs where indicated. Install with top edge 3/4 inch below the surface and tool adjacent concrete edges to a 1/8 inch radius. Use steel pins to hold material in place during placing and floating of concrete. After a minimum of 28 days after slabs have been placed and finished, fill tops of expansion joints with backer rod and sealant to 1/8 inch below surface of slabs. No traffic shall be permitted to travel over sealed joints until sealer is thoroughly dry.

3.6 DEFECTIVE WORK:

Remove and replace defective concrete construction at Contractor's expense.

END OF SECTION

02/19/2014

SECTION 03371

SHOTCRETE

PART 1 - GENERAL

1.1 SUMMARY:

1.1.1 Section Includes: Pneumatically placed concrete (shotcrete).

1.1.2 Related Documents: The Conditions of the Contract and Division 1 apply to this section as fully as if repeated herein.

1.2 RELATED SECTIONS:

1.2.1 Forming earth to achieve contours and surfaces required is specified in Section 02315.

1.2.2 Prepared forms to achieve contours and surfaces required are specified in Section 03100.

1.2.3 Concrete reinforcement is specified in Section 03200.

1.3 SUBMITTALS:

1.3.1 Product Data: Submit information concerning the course and quality of materials.

1.3.2 Mixes: Submit proportioning and test data from prior experience if available. If data from prior experience are not available or accepted, make and have tested specimens of mix proportions.

1.3.3 Submittal procedures and quantities are specified in Division 1.

1.4 QUALITY ASSURANCE:

1.4.1 Perform Work in accordance with ACI 506.2.

1.4.2 Maintain one copy of each document on site.

1.4.3 Testing: The Contractor shall pay for all costs involved with the concrete mix design and testing of concrete ingredients and core testing and patching. Mix design shall be selected to produce the compressive strength indicated on the Drawings.

1.4.4 Test Panels: Each team of the person at the nozzle and the helper shall shoot a test panel of the thickness and with typical reinforcing steel pattern using each shooting position before commencing any wet mix shotcreting work on the building. The Architect shall witness the assembly, reinforcing, shooting and disassembly of the test. The panel shall be at least 4 feet by 4 feet. After shooting, but before the concrete has

fully set, the panel shall be disassembled to assure that the team and equipment to be used is capable of providing sound concrete behind reinforcing steel. The panel shall be free of voids, sags, etc.

1.4.5 Application of structural wet mix shotcrete in the finished work shall not proceed until the test panel has been shot, disassembled, inspected and approved by the Architect.

1.5 ENVIRONMENTAL REQUIREMENTS:

1.5.1 Ensure materials and surrounding air temperature are a minimum 50 degrees F prior to, during, and 7 days after completion of work.

1.5.2 During freezing or near freezing weather, provide equipment and cover to maintain 50 degrees F and to protect work completed or work in progress.

1.5.3 Suspend shotcrete operations during high winds, rainy weather, or near freezing temperatures when work cannot be protected.

1.6 FIELD MEASUREMENTS:

Verify that field measurements are as shown on Drawings.

PART 2 - PRODUCTS

2.1 MATERIALS:

2.1.1 Cement: ASTM C 150, Type II, low alkali.

2.1.2 Aggregate: Conform to ACI 506. Graduation No. 1 or No. 2, ASTM C 33.

2.1.3 Water: Potable, clean. Mixing water for shotcrete shall meet requirements of ASTM C 94. Water shall be free of elements that cause stains when used on architectural finishes.

2.1.4 Curing Compound not detrimental to architectural finish of shotcrete.

2.1.5 Curing Materials: Curing materials that cause stains on architectural finishes shall not be used.

2.1.6 Sheet Materials: ASTM C 171.

2.2 SHOTCRETE MIX:

2.2.1 Conform to following requirements:

.1 Compressive Strength: As indicated on the Drawings. (28 day minimum)

.2 Aggregate Size (maximum): 3/8 inch

.3 Slump: 1 to 2 inches (plus or minus 1/2 inch)

2.2.2 Thoroughly mix shotcrete. Use mix within 45 minutes.

2.2.3 Develop mix design to give good compaction and low percentage of rebound, but stiff enough not to sag.

2.2.4 Maintain quality control records during production of shotcrete. Make records available to the Architect.

PART 3 - EXECUTION

3.1 EXAMINATION:

3.1.1 Examine surfaces to receive concrete and make sure that unsuitable conditions have been corrected before proceeding.

3.1.2 All shotcrete work shall be continuously inspected during placing by an inspector specially approved for that purpose by the local authority. The special inspector will check the materials, placing equipment, details of construction and construction procedure. He shall furnish a verified report that of his own personal knowledge the work covered by the report has been performed and materials used and installed in every material respect in compliance with the duly approved plans and specifications.

3.1.3 No less than two cores each day shall be taken from the project at locations designated by the Architect. At least one core shall be taken from each building for each 5,000 square feet of floor or wall area. Cores shall be tested at an age of approximately 28 days. Cores shall be 4 inch diameter or larger. In addition cores shall be taken from 2 test panels each day. Test panels must be correlated with locations of wall being placed at same time as test panels.

.1 The project inspector or testing agency shall inspect the coring operations and shall prepare a report of coring operations for the testing laboratory. Such reports shall include the number, location and conditions of all cores cut on each project regardless of whether or not the core specimens failed during the cutting operation. All cores shall be submitted to the laboratory for examination.

3.1.4 Batch Plant Inspection: Continuous, by qualified Inspector.

3.2 EXAMINATION:

3.2.1 Verify field conditions are acceptable and are ready to receive work.

3.2.2 Verify field measurements are as shown on Drawings.

3.2.3 Verify fabricated forms are true to line and dimension, adequately braced against vibration, and constructed to permit escape of air and rebound during gunning operations.

3.2.4 Ensure correct placement of reinforcement. Ensure sufficient clearance around reinforcement to permit complete encasement.

3.2.5 Ensure easy access to shotcrete surfaces for screeding and finishing, to permit uninterrupted application.

3.2.6 Beginning of installation means installer accepts existing conditions.

3.3 PREPARATION:

3.3.1 Remove existing unsound concrete from substrate surfaces by chipping.

3.3.2 Minimize abrupt changes in thickness of repair. Remove square external corners from substrate by radiusing the edge.

3.3.3 Sandblast existing surfaces that do not require chipping, to remove oil, grease, and other contaminants, and to provide a roughed surface for proper bonding of the concrete.

3.3.4 Determine operating procedures for placement in close quarters, extended distances, or around unusual obstructions where placement velocities and mix consistency must be adjusted.

3.3.5 Clean and wet cementitious surfaces prior to receiving shotcrete. Keep porous surfaces damp for several hours prior to shotcreting. No visible free water showing when shotcreting.

3.4 BATCHING AND MIXING:

3.4.1 Mixes: Shall be designed based on the following minimum proportions:

.1 Provide shrinkage tests, as specified under concrete section.

.2 Mix using fine and 3/8 inch coarse aggregates shall contain between 20 and 30 percent pea gravel as specified, graded fine aggregate, not less than 6.5 sacks of portland cement per cubic yard and sufficient water to produce a maximum slump of 2 inches + 1/2 inch.

.3 The above cement contents are minimum and may be increased at the direction of the Architect if core strengths indicate marginal strength performance of the mixes.

.4 Admixtures may be used only at the specific written permission of the Architect.

.5 Mixes shall be proportioned, batched and transported to assure complete mixing, truck mixers shall be charged to not more than 75% of their rated capacity. Mixes shall be batched to provide a maximum 2 inch slump + 1/2 inch at the mixer at time of discharge. Water may be added at the job only at the direction of the Inspector and in no case may the slump at the pump exceed 2 inches + 1/2 inch.

3.4.2 Thoroughly mix cement and aggregate for at least one minute before adding water.

3.5 APPLICATION:

3.5.1 Place concrete using suitable delivery equipment and procedures that will result in concrete in place meeting the requirements of the Drawings and Specifications. Whenever possible, except when enclosing reinforcing steel, the nozzle shall be held at right angles to the surface to be placed and at a distance from two and one-half to three feet. When enclosing reinforcing steel, the nozzle shall be held so as to direct the material behind the bars. Each side of each bar shall be shot separately. Any deposits of loose sand or rebound shall be carefully removed from surfaces before shotcrete is placed. A second experienced nozzleman equipped with an air jet shall attend the operators whenever reinforcing steel is being enclosed and shall carefully precede the nozzle and blow out all rebound and sand which may have lodged behind the steel. Horizontal members shall not be shot from the top unless special methods are specified to eliminate rebound. The use of "puddled" shotcrete in which water content of the mix is increased to facilitate the placing in difficult locations will not be permitted. Shotcrete shall not be placed where the stream from the nozzle can not directly impinge on the surface on which the shotcrete is to be placed.

3.5.2 Rebound. No rebound shall be used over or in any way incorporated into the work.

3.5.3 Joints. The film of laitance which forms on the surface of the shotcrete shall be removed within approximately two hours after application by brushing with a stiff broom. If this film is not removed within two hours, it shall be removed by thorough wire brushing or sand blasting. Construction joints over eight hours old shall be thoroughly cleaned prior to receiving shotcrete.

3.5.4 Damage. Any pneumatically placed concrete which subsides after placement shall be removed. Should rebound pockets, sags, sloughing or other defects occur in the work they shall be cut out and replaced. If a trowel, straight edge or other implement is used to remove excessive material from the surface, care shall be exercised to prevent the shotcrete from being dragged or torn.

3.5.5 Reinforcement. Before placing shotcrete around or upon reinforcement, the reinforcement shall be thoroughly cleaned of all adhering injurious substances such as grease, oil, paint, loose mill scale, heavy rust and hardened and semi-hardened concrete.

3.5.6 Reinforcing shall be supported and secured in place in such manner that the vibration resulting from the depositing of shotcrete will not injure the work.

3.5.7 Forms and ground wires for forms for shotcrete shall be substantial and rigid. Forms shall be built and placed so as to permit the escape of rebound.

.1 Rigid or other approved backing shall be placed against the earth during the application of wet mix shotcrete. Rigid or other approved backing shall be used where a void in the embankment is to be bridged. Forms to be provided where required.

3.5.8 Line and Thickness Control: Use adequate wires or other accepted means to establish the thickness, surface planes, and finish lines of the concrete. Maintain specified tolerances by keeping wires secure and taut.

3.5.9 Placement Precautions: Do not place concrete if drying or stiffening of the mix takes place at any time prior to delivery to the nozzle.

3.5.10 The height of a layer shall be limited to not more than 3 1/2 feet and a succeeding layer shall not be placed in less than three hours. No sloughing or sagging shall be permitted.

.1 Exception: The Architect may authorize a succeeding layer to be placed in less than three hours. No sloughing or sagging shall be permitted.

3.6 FINISHING:

Bring concrete to a true, even surface by floating or rodding and apply wood float finish to surfaces. Finish surfaces shall contact a straightedge with a variation of not more that 1/8 inch in 10 feet.

3.7 CURING AND PROTECTING:

3.7.1 Initial curing. Immediately after finishing, keep concrete continuously moist for at least 2 days by one of the following materials or methods:

.1 Continuous sprinkling.

.2 Absorptive mat, or other covering kept continuously wet.

3.7.2 Final curing. Provide additional curing immediately following the initial curing and before the concrete has dried. Use one of the following materials or methods:

.1 Continue the method used in initial curing.

.2 Material conforming to ASTM C 171.

.3 Other acceptable moisture retaining coverings.

3.7.3 Duration of Curing: Continue curing for the first 14 days after concreting. During the curing period, maintain concrete above 40 degree F and in a moist condition as specified previously. Prevent rapid drying at the end of the curing period.

3.8 FIELD QUALITY CONTROL:

3.8.1 Obtain representative core samples as prescribed by Code, and test in accordance with ASTM C 42.

3.8.2 Remove and replace concrete which lacks uniformity, exhibits segregation, honeycombing, or lamination, or which contains and dry patches, slugs, voids, or sand pockets, or does not fully conform to the requirements of the Contract Documents. If acceptable to the Architect, repair defective areas in accordance with procedure specified in Section 03300.

3.8.3 Remove and replace damaged concrete which cannot be satisfactorily repaired.

3.8.4 Repair core holes in accordance with Chapter 9 of ACI 301. Do not fill core holes with gunite. Repair holes with non shrink non staining concrete.

3.9 PROTECTION AND CLEANING:

Before placing any concrete, the Contractor shall thoroughly protect all interior and exterior trim, sash, doors, transoms, floors, ceilings and all remaining equipment in a manner approved by the Architect. The debris caused by the operation shall be immediately cleaned up after the particular operation is completed and not less than once each day. Excessive amounts of rebound accumulation shall be avoided. All finish surfaces shall be cleaned, to the approval of the Architect. All debris to be removed for the building and from site.

END OF SECTION

34-003 – 02/25/2014

SECTION 03480

PRECAST CONCRETE SPECIALTIES

PART 1 - GENERAL

1.1 SUMMARY:

1.1.1 Section Includes: Architectural pre-cast concrete vault for misting fog system equipment.

1.1.2 Related Documents: The Conditions of the Contract and Division 1 apply to this section as fully as if repeated herein.

1.2 REFERENCES:

The editions of the specifications and standards referenced herein, published by the following organizations, apply to the construction only to the extent specified by the reference. Refer to Section 01422 for information concerning availability and use of references.

American Society for Testing and Materials (ASTM)

1.3 SUBMITTALS:

1.3.1 Shop Drawings: Indicate unit identification marks, connection details, support items, show all joint and connection details and their relation to supporting structure, dimensions, openings, and relationship to adjacent materials.

1.3.2 Furnish to appropriate sections the details, dimensional tolerances, and other information required for coordination of all work within the work of this Section.

1.3.3 Samples: Submit three samples of each component, illustrating surface finish, color, profile, and texture. Samples shall be approved by Architect prior to fabrication.

1.3.4 Refer to Section 01334 for number and manner of submittals.

1.4 MAINTENANCE DATA:

1.4.1 Maintenance Data: Indicate surface cleaning instructions.

1.5 DELIVERY, STORAGE, AND HANDLING:

1.6.1 Protect units to prevent staining, chipping, or spalling of concrete.

1.7 FIELD MEASUREMENTS:

1.7.1 Verify that field measurements are as indicated on Shop Drawings.

PART 2 - PRODUCTS

2.1 MANUFACTURERS:

2.1.1 Concrete Designs, Inc.; Tucson, AZ.

2.2 CONCRETE MATERIALS:

2.2.1 Cement: ASTM C 150; Colton Type I or II.

2.2.2 Concrete Materials: ASTM C 33; water and sand.

2.2.3 Admixtures: ASTM C 494; Type A, water reducing, manufacturer's recommended type.

2.2.4 Surface Finish: Voidless texture.

2.3 SUPPORT DEVICES:

2.3.1 Connecting and Support Devices: Minimum 20 gage corrugated galvanized inserts, where indicated on Drawings.

2.3.2 Bolts, Nuts, and Washers: ASTM A 307.

2.4 ACCESSORIES:

2.4.1 Sealant: Two component polyurethane, as specified in Section 07900.

2.5 MIX:

2.5.1 Concrete: Minimum 5,000 psi, 28 day strength.

2.6 FABRICATION:

2.6.1 Use rigid molds, constructed to maintain pre-cast unit uniform in shape, size, and finish.

2.6.2 Maintain consistent quality during manufacture.

2.6.3 Fabricate connecting devices, plates, angles, inserts, bolts, and accessories. Fabricate to permit initial placement and final attachment.

2.6.4 Embed anchors, inserts, plates, angles, or other cast-in-place items as required for the component configuration.

2.7 FINISH – PRECAST UNITS:

2.7.1 Finish: Light brown, heavy sandblast, color and texture as approved by Architect.

2.7.2 Ensure exposed-to-view finish surface of precast units are uniform in color and appearance and identical to approved samples.

2.8 MANUFACTURER – LATEX-PORTLAND CEMENT ADHESIVE AND GROUT:

2.8.1 Custom Building Products; Bell, CA

2.9 SETTING BED MATERIALS:

2.9.1 Portland Cement: ASTM C 150, Type I or II.

2.9.2 Sand: ASTM C 33.

2.9.3 Water: Potable

2.10 SETTING BED MIX:

2.10.1 1 sack Portland cement and 1 sack no. 30 or no. 60 silica sand and gallons latex.

2.10.2 Mixing: Thoroughly mix dry ingredients before adding water to obtain proper consistency. Discard mortar when it has reached its initial set.

2.10.3 Mortar which will be exposed shall be pigmented to match approved samples.

PART 3 - EXECUTION

3.1 EXAMINATION:

3.1.1 Verify site conditions.

3.1.2 Verify that substrate, structure, anchors, devices, and openings are ready to receive work of this Section.

3.2 APPLICATION:

3.2.1 Remove all traces of deleterious materials from substrate.

3.2.2 Arrange units for similar-appearing assemblies and spacing.

3.2.3 Field cut units for proper sizing and placement. Utilize diamond blade equipment only.

3.2.4 Allow maximum ¼ inch joints between units.

3.2.5 Align and maintain uniform horizontal and vertical joints as erection progresses.

3.2.6 Ensure complete contact between units and mortar.

3.2.7 Allow minimum 72 hours for mortar to cure.

3.2.8 Grout joints with approved pigmented mortar, concave joints.

3.3 ADJUSTING:

3.3.1 Adjust units so that joint dimensions are within tolerances.

3.4 PROTECTION AND CLEANING:

3.4.1 Protect work from damage.

3.4.2 Clean exposed facings to remove dirt and stains that may be on units after erection and completion of joint treatment.

3.4.3 Wash and rinse in accordance with manufacturer's recommendations. Protect other work from damage due to cleaning operations.

3.4.4 Do not use cleaning materials or processes that could change the character of exposed finishes.

3.5 REPAIRS:

3.5.1 Conduct inspections, perform testing and make repairs or replace unsatisfactory precast units.

3.5.2 Limitations as to the amount of patching that will be permitted is subject to approval of Architect.

3.5.3 In addition to above, units may be rejected for anyone of the following:

.1 Exceeding the specified installation tolerances.

.2 Damaged during construction operations.

.3 Exposed-to-view surfaces that develop cracks or surface finish deficiencies.

END OF SECTION

34-003 – 02/21/2014

SECTION 04400

CUT STONE ASSEMBLIES

PART 1 - GENERAL

1.1 SUMMARY:

1.1.1 Section Includes: Cut stone assemblies for solid surface countertop as indicated on the Drawings.

1.1.2 Related Documents: The Conditions of the Contract and Division 1 apply to this section as fully as if repeated herein.

1.2 REFERENCES:

The editions of the specifications and standards referenced herein, published by the following organizations, apply to the stone facing only to the extent specified by the reference. Refer to Section 01422 for information concerning availability and use of references.

American National Standards Institute (ANSI)
American Society for Testing and Materials (ASTM)

1.3 SYSTEM DESCRIPTION:

1.3.1 General: Fabricate and install stonework to withstand normal loads from wind, gravity, movement of building structure, and thermally induced movement, as well as to resist deterioration under conditions of normal use including exposure to weather, without failure.

1.3.2 Design supports, anchorages, spans, fastenings, and joints under direct supervision of Professional Engineer experienced in design of this type of Work and licensed in the State of California. Engineer shall provide shop drawings and engineering calculations with professional engineer's stamp or seal.

1.3.3 All steel shapes, plates, and straps shall be designed to carry the design loads with safety factors and allowable stresses in accordance with AISC, except that steel supports carrying gravity loads shall be stressed not more than 50 percent of the yield stress in bending. Expansion bolts, straps, hooks, anchors, and other devices shall be designed to carry the design loads with appropriate safety factors.

1.3.4 Design, detail and fabricate connections to provide allowance for fabrication tolerances, erection tolerances, and structural deflections as required.

1.4 SUBMITTALS:

1.4.1 Shop Drawings: Submit cutting and setting drawings showing sizes, dimensions, sections and profiles of stonework units, arrangement and provisions for jointing, supporting, anchoring, and bonding stonework; supports and other necessary details for lifting devices and reception of other work. Indicate location of each unit of stone on setting drawings with number designation corresponding to number marked on each unit.

.1 Include large-scale details of decorative surfaces and inscriptions.

1.4.2 Product Data: Submit specifications and other technical data for each type of stone required, accessories and other manufactured products. Include instructions for handling, storage, installation and protection.

1.4.3 Samples: Submit samples, not less than 12" by 12", of grade and finish of each type of stone required. Include in each set the full range of each exposed color and texture to be expected in completed work.

.1 Colored Mortar: Submit colored pointing mortar and grout samples for each color required showing full range of exposed color and texture to be expected in completed work.

1.4.4 Submittal procedures and quantities are specified in Section 01334.

1.5 QUALITY ASSURANCE:

1.5.1 Single-Source Responsibility: Obtain each color, grade, finish, type, and variety of stone from a single quarry with resources to provide materials of consistent quality in appearance and physical properties.

1.5.2 Installer Qualifications: Engage an experienced installer who has completed stone work similar in material, design, and extent to that indicated for this project that has resulted in construction with a record of successful in-service performance.

1.6 DELIVERY, STORAGE AND HANDLING:

1.6.1 Protect stone, mortar materials and accessories during storage and construction against moisture, soiling, staining and physical damage.

1.6.2 Handle stone to prevent chipping, breakage, soiling or other damage. Do not use pinch or wrecking bars. Lift with wide belt type slings where possible; do not use wire rope or ropes containing tar or other substances that might cause staining. If required to move stone, use wood rollers with cushions at end of wood slides.

1.6.3 Store stone on wood skids or pallets, covered with non-staining, waterproof membrane. Place and stock skids and stones to distribute weight evenly and to prevent

breakage or cracking of stones. Protect stored stone from weather with waterproof, non-staining covers or enclosures, but allow air to circulate around stones.

PART 2 - PRODUCTS

2.1 MATERIALS:

2.1.1 Quartz.

.1 Finish: As selected by Architect from manufacturer's standard finishes.

.2 Match Architect's sample for type, variety, grade, color, and other characteristics relating to aesthetic effects.

2.2 MORTAR AND GROUT MATERIALS:

2.2.1 Portland Cement: ASTM C 150, Type I, gray or white as required to produce mortar color selected by the Architect.

2.2.2 Hydrated Lime: ASTM C 207, Type S.

2.2.3 Aggregate: ASTM C 144, and as follows:

.1 Joints narrower than 1/4 inch use aggregate graded with 100 percent passing No. 8 sieve and 95 percent passing No. 16 sieve.

.2 Pointing mortar use aggregate graded with 100 percent passing No.16 sieve.

.3 White Mortar Aggregate: Natural white sand or ground white stone.

.4 Colored Mortar Aggregates: Ground marble, granite, or other sound stone, as required to match color selected by the Architect.

2.2.4 Colored Mortar Pigments: Natural and synthetic iron oxides and chromium oxides, compounded for use in mortar mixes. Acceptable products or equal:

Solomon Grind-Chem Services, Inc.; SGS Mortar Colors
Davis Colors; True Tone Mortar Colors
Sonneborn Building Materials; Sonobrite

2.2.5 Water: Clean, nonalkaline and potable.

2.2.6 Latex Additive: Manufacturer's standard acrylic formulation, but not containing a retarder, designed by manufacturer for use with thick bed mortar, bond coat and grout applications.

2.3 STONE ANCHORS AND ATTACHMENTS:

2.3.1 Provide anchors and attachments of type and size required to support stonework and fabricated from the following metals for conditions and anchors indicated below:

.1 Stainless Steel: ASTM A 666, AISI Type 304, for anchors in direct contact with stone.

2.3.2 Dovetail Slots: Furnish dovetail slots, with filler strips of slot size required to receive anchors provided, fabricated from 22 gage galvanized sheet steel meeting the requirements of ASTM A 653.

2.3.3 Stone Anchors: Type and size indicated or, if not indicated, as required for securely anchoring and fastening stonework in place.

2.3.4 Setting Buttons: Lead or plastic buttons of thickness required for joint size indicated and of size required to maintain uniform joint width.

2.3.5 Cleaner: Provide stone cleaner of proper formulation for kind of stone, finish and application indicated, as recommended by stone producer. Do not use acid type cleaning agents or other cleaning compounds containing caustic or harsh fillers, except where expressly approved by stone producer for type of condition involved.

2.3.6 Sealant for Grouting Joints: Silicone sealant for vertical exterior applications as specified in Section 07900, color as selected by the Architect.

2.4 MORTAR AND GROUT MIXES:

2.4.1 General: Do not add admixtures including coloring pigments, air-entraining agents, accelerators, retarders, water repellent agents, anti-freeze compounds, or calcium chloride, unless otherwise indicated or approved.

2.4.2 Mixing: Combine and thoroughly mix cementitious materials, water and aggregates in a mechanical batch mixer; meet the requirements of referenced ASTM standard for mixing time and water content, unless otherwise specified.

2.4.3 Setting Mortars: ASTM C 270, Proportion Specification, Type S, except use Type N for setting limestone.

2.4.4 Pointing Mortar: Provide pointing mortar mixed to match Architect's sample and complying with requirements specified above for setting mortar, and the following:

.1 Colored Pigmented Pointing Mortar: Select and proportion pigments with other ingredients to produce color required. Do not exceed pigment to cement ratio of 1-to-10, by weight.

.2 Colored Aggregate Pointing Mortar: Produce color required by combining colored aggregates with portland cement of selected color.

2.5 FABRICATION:

2.5.1 General: Fabricate stone as indicated and as detailed on final shop drawings to comply with recommendations of stone association. Provide holes and sinkages cut or drilled for anchors, fasteners or supports and lifting devices as indicated and as necessary to secure stonework in place. Cut and back-check as required for proper fit and clearance. Shape beds to fit supports.

2.5.2 Cut stone accurately to shape and dimensions shown on final shop drawings, maintaining fabrication tolerances of stone associations.

.1 Dress joints (bed and vertical) straight and at 90 degree angle with face, unless otherwise indicated.

.2 Provide quirk mitered corners, unless otherwise indicated. Provide for cramp anchorage in top and bottom bed joints of corner units, unless otherwise indicated.

.3 Joint Width: Cut to provide joint widths as indicated or, if not indicated, cut to allow for uniform 1/4 inch wide joint.

2.5.3 Thickness: Provide stone of thickness indicated. Saw cut or roughly dress back of stone so that variation in thickness from that indicated does not exceed 1/16 inch, unless otherwise indicated.

2.5.4 Contiguous Work: Provide chases, reveals, reglets, openings and similar features as required to accommodate contiguous work.

2.5.5 Fabricate molded work, including washes and drips, to produce stone shapes having a uniform profile throughout their entire length and with precisely formed arises slightly eased to prevent snipping, and matched at joints between units.

2.5.6 Carve and cut decorative surfaces and inscriptions to conform with models approved by the Architect.

PART 3 - EXECUTION

3.1 PREPARATION:

Advise installers of other work about specific requirements relating to placement of inserts, flashing reglets, and similar items which are to be used by stone mason for anchoring, supporting and flashing stonework. Furnish installers of other work with drawings or templates showing location of inserts for stone anchors and supports, and with the inserts themselves, unless otherwise indicated.

3.2 SETTING STONE, GENERAL:

3.2.1 Do not use stone units with chips, cracks, voids, stains or other defects which might be visible in the finished work, unless otherwise acceptable to the Architect.

3.2.2 Clean stone before setting by scrubbing with fiber brushes followed by a thorough drenching with clear water. Use only mild cleaning compounds that contain no caustic or harsh fillers or abrasives. If not thoroughly wet at time of setting, drench or sponge stone.

3.2.3 Execute stonework by skilled mechanics who are experienced in setting of stone of the type indicated and can perform necessary field cutting as stone is set.

3.3 SETTING STONEWORK WITH SEALANT JOINTS:

3.3.1 Support each stone with both gravity and lateral anchors of type and number indicated on final shop drawings. Provide a minimum of 4 anchors for panels up to 12 square feet and 2 additional anchors for each additional 8 square feet of surface area.

3.3.2 Erect facing and trim plumb and true with joints uniform in width and accurately aligned. Provide setting buttons as required to maintain joint width.

3.3.3 Set stone on shims without mortar, provide quantity of shims required to maintain uniform joint width and alignment of stone units.

3.3.4 Fill joints with silicone sealant as specified in Section 07900.

3.4 SETTING STONEWORK WITH MORTAR:

3.4.1 Wet stones which are dry at time of setting by drenching or sponging them with water.

3.4.2 Set stones in full bed of mortar with vertical joints slushed full.

.1 Place setting buttons of adequate size, is sufficient quantity, and of same thickness as joint width, to prevent mortar from squeezing out and to maintain uniform joint widths. Hold buttons at least one joint width back from face of stones.

.2 Fill anchor holes with mortar.

3.4.3 Set the following stonework with unfilled vertical joints for installation of joint sealant: Cornices, copings, belt and other projecting courses, steps, platforms.

3.4.4 Rake out mortar from joints to depths equal to 2-1/2 times their widths but not less than 1/2 inch nor less than that required to expose sound mortar for joints pointed with mortar, or to provide sufficient depth for sealant backing for joints pointed with sealants.

3.4.5 Prepare stone joint surfaces for pointing with mortar by removing dust and mortar particles. Where setting mortar was removed to depths greater than surrounding areas, apply first layer of pointing mortar in layers not greater than 3/8 inch until a uniform depth is formed; compact each layer thoroughly and allow to become thumbprint hard before applying next layer.

3.4.6 Point stone joints by placing pointing mortar in 3 layers with each of first and second layers filling approximately two fifths of joint depth and third layer remaining one-fifth. Fully compact each layer and allow to become thumbprint hard before applying next layer.

3.4.7 Tool joints with a round joiner having a diameter 1/8 inch larger than width of joint, when pointing mortar is thumbprint hard.

3.5 INSTALLATION OF JOINT SEALANTS:

Prepare joints and apply sealants of type and at locations indicated or specified to comply with applicable requirements of Section 07900.

3.6 ADJUSTING AND CLEANING:

3.6.1 Repair stone units which are broken, chipped, stained or otherwise damaged.

3.6.2 Clean stonework after setting, grouting and curing is complete; use procedures recommended by stone producer for types of application indicated.

END OF SECTION

34-003 – 02/19/2014

SECTION 04821

REINFORCED GROUTED CONCRETE UNIT MASONRY

PART 1 - GENERAL

1.1 SUMMARY:

1.1.1 Section Includes: Reinforced concrete unit masonry construction.

1.1.2 Related Documents: The Conditions of the Contract and Division 1 apply to this section as fully as if repeated herein.

1.2 REFERENCES:

The editions of the specifications and standards referenced herein, published by the following organizations, apply to the construction only to the extent specified by the reference. Refer to Section 01422 for information concerning availability and use of references.

American Concrete Institute (ACI)
American Society for Testing and Materials (ASTM)

1.3 SUBMITTALS:

1.3.1 Samples: Submit representative samples of masonry units to be used on the job showing full range of texture, color, and size..

1.3.2 Product Data: Furnish a notarized certificate of compliance identifying the cement used and stating that the cement complies with ASTM C 150.

1.3.3 Submittal procedures and quantities are specified in Division 1.

1.4 QUALITY ASSURANCE:

1.4.1 Regulatory Requirements: Except as modified by the requirements specified herein or the details indicated, reinforced concrete unit masonry construction shall conform to the 2010 California Building Code (CBC), Chapter 21 - Masonry.

1.4.2 Certifications: Furnish a certificate, signed by the unit masonry manufacturer, executed in triplicate, stating that masonry units have been properly and thoroughly cured at the plant before shipment, and that they conform to the requirements of this specification. Include the name of the Contractor, the project location, and the quantity and date or dates of shipment or delivery to which the certificate applies.

1.5 DELIVERY, STORAGE, AND HANDLING:

Immediately upon delivery to the site, stack masonry units undercover or otherwise protect from exposure to the weather and from contact with soil. Exercise care in

handling these items to avoid chipping and breakage and to protect them from damage. Use of damaged blocks will not be permitted. Store units on pallets or temporary wood floors off the ground and out of the way of other trades.

1.6 PROJECT CONDITIONS:

Do not lay masonry when the ambient temperature is below 40 degrees F or when it is likely that the ambient temperature will fall below 40 degrees F during, or within 24 hours after, masonry laying operations.

PART 2 - PRODUCTS

2.1 MATERIALS:

2.1.1 Concrete Masonry Units: Hollow load-bearing units, meeting the requirements of ASTM C 90, Type 1, f'm = 1350 psi, medium weight units, except that units shall have a maximum linear shrinkage of 0.06 percent. Use special shaped units for bond beams and lintels with a minimum of unit cutting. Provide standard size units with 8" by 16" nominal face size, thicknesses as indicated, and standard size units with 4” by 16” nominal face size, thicknesses as indicated.

.1 Concealed Units: Standard block texture of standard grey color.

.2 Exposed Surfaces: Precision texture. Color to be “Cool Gray” as manufactured by Angelus Block Co., Inc.

.3 Exposed Surfaces – Accent: Burnished texture; color to be “Midnight” as manufactured by Angelus Block Co., Inc.

.4 Retaining Wall and Enclosure Wall Caps: 8” x 2” x 16” Precision units; match wall color.

2.1.2 Cement: ASTM C 150, Type I or II, low alkali.

2.1.3 Lime: Hydrated, meeting the requirements of ASTM C 207, Type S or quicklime meeting the requirements of ASTM C 5.

2.1.4 Mortar Sand: Natural sand, clean and graded, meeting the requirements of ASTM C 144, except not less than 3 percent shall pass No.100 sieve.

2.1.5 Aggregate for Masonry Grout: Pea gravel meeting the requirements of ASTM C 404 except graded with not more than 5 percent passing a No. 8 sieve and 100 percent passing 3/8 inch sieve size.

2.1.6 Sand for Grout: Washed, natural sand meeting the requirements of ASTM C 33 and having hard, strong and durable particles evenly graded with 5 percent minimum passing #100 screen and which does not contain more than 2 percent by weight of such

deleterious substances as clay lumps, shale, shist, alkali, mica, coated grains or soft flaky particles.

2.1.7 Admixtures:

.1 Grout Admixture: Acceptable product or equal:

Sika Corporation; Grout Aid Type II

.2 Mortar Waterproofing: Metallic stearate type admixtures. Acceptable products or equal:

Berylex Western; Berylex
A. C. Horn Inc.; Hydratite Liquid
Master Builders; Omicron
Sonneborn Building Products; Hydracide Powder

.3 Mortar Colors: Inorganic synthetic and natural iron oxides finely milled so that a minimum of 95 percent will pass a No. 325 sieve. Provide pigments which are lightfast, alkali resistant, weather resistant, water soluble, and free of deleterious fillers and extenders. Package coloring agent in measured units that can be added to a measured amount of cement to achieve a uniform color between batches. Acceptable manufacturers or equal:

Solomon Grind Chem Service, Inc.
Davis Colors

2.1.8 Mortar: Type S meeting the requirements of ASTM C 270 excluding masonry cement mixes.

2.1.9 Grout: Coarse grout with a minimum of 2 parts pea gravel for use in grout spaces 2 inches wide or more and in all filled cells.

2.1.10 Lime Putty: Make from quicklime or hydrated lime. If from quicklime, other than pulverized (processed), quicklime, slake properly and screen through sieve of 16 meshes per linear inch. Before using, properly store and protect for not less than 10 days. If pulverized (processed quicklime) is used, slake for at least 48 hours or until putty has cooled entirely. Putty shall weigh at least 83 pounds per cubic foot.

2.1.11 Centering Devices: Factory fabricate from steel wire meeting the requirements of ASTM A 82. Form wire devices in walls from wire that has been zinc coated in accordance with ASTM A 116, Class 1. Form centering clips from not lighter than 9 gage wire. Provide clips of a design that will prevent displacement of the reinforcing bars during the course of construction.

2.1.12 Water: Fresh, clean and potable, free from such amounts of mineral and organic substances as would adversely affect the hardening of cement mortar.

2.1.13 Reinforcing Steel: Furnish and install reinforcing steel for grouted concrete unit masonry in accordance with the requirements of Section 03200.

PART 3 - EXECUTION

3.1 PREPARATION:

3.1.1 Protection: Protect sills, ledges, offsets, jambs, corners from droppings of mortar and grout and from damage during construction.

3.1.2 Layout: Lay plumb, level and to plane surface. Mortar joints straight, clean and uniform in thickness.

3.2 MIXING MORTAR AND GROUT:

3.2.1 Mixing of Mortar: Place 1/2 required water and 1/2 required sand into rotating mixer, followed by all cement and remaining water, sand, and lime. Add admixture in proportion and sequence as recommended by admixture manufacturer.

.1 Conventional Mortar: Lime shall be the last material added to the mix. Mix at least 3 minutes after all materials are in mixer. Use mixer of at least one sack capacity. Hand mixing not allowed. Measure materials for mortar and grout in suitable calibrated devices.

.2 Colored Mortar: Place 3/4 of the required water and 1/3 of the required sand into the rotating mixer, followed by all cement, lime, admixture, and coloring agent. Add admixture and coloring at rates recommended by the admixture manufacturer except that coloring agent not to exceed 10 percent of the total weight of cementitious materials. Gradually add the remaining sand and water mixing for 5 minutes or more as necessary to achieve a uniform color. Use a mixer of at least one sack capacity. Measure materials for mortar and grout in suitable calibrated devices.

.3 Maintain mortar on boards to slump of 2-3/4 inches plus or minus 1/4 inch using truncated cone 4 inch to 2 inch diameter, 6 inches high. Retemper mortar only on boards by adding water within basin formed with mortar and carefully mix mortar and water together. Dashing or pouring water over mortar not permitted. Discard mortar that has become harsh and non-plastic. When mortar has been maintained plastic, it may be used up to, but not more than, 60 minutes after original mixing.

.4 Minimum Compressive Strength of Mortar: 1800 psi at 28 days. Include an approved admixture in mortar to reduce shrinkage and prevent efflorescence.

3.2.2 Mixing Grout: Use transit mixed grout with sufficient water added so slump is near maximum (approximately 11 inches) without separation of aggregate and cement paste. Discard grout if not in final position by 2-1/2 hours after water is first added providing it is constantly rotated and grout remains in fluid condition. Move from mixer to place of final deposit as rapidly as practical by methods which prevent separation or loss

of ingredients. Add admixtures in the proportion and sequence as recommended by admixture manufacturer.

.1 Measure materials with accurately calibrated devices. Shovel measurements not permitted. Percentages are by volume and one 94 pound sack of cement equals 1 cubic foot.

.2 Proportions: 1 part cement, 3 parts maximum sand, 2 parts pea gravel. Add enough water to produce pouring consistency without segregation of aggregates. Add grout admixture in accordance with manufacturer's recommendation for high lift grout.

.3 Minimum Compressive Strength of Grout: 2000 psi at 28 days.

.4 Pointing Mortar: 1 part white cement, 1/8 part lime putty, 1 part Del Monte Ground White 80 mesh sand.

3.3 INSTALLATION:

3.3.1 Interface With Other Products:

.1 Locate dowel positions before concrete is placed so dowels match reinforcing steel in masonry. Furnish a dowel placing plan in addition to bar lists. Locate elevations for joint between concrete footing and masonry.

.2 Place bolts, anchors, drilled in wedge anchors, joist anchors, metal attachments, nailing blocks and inserts required by other trades for attaching their products to masonry.

.3 Coordinate with electrical operations to align outlet boxes with masonry courses and joints to reduce cutting of units to minimum. Fit units neatly around and against pipes.

3.3.2 Reinforce and fully grout all masonry.

3.3.3 Laying Masonry Units: Do not install block or grout unless masonry inspector is present.

.1 Do not use oil or grease marked units.

.2 Remove dust or dirt from block surfaces before laying. Sandblast top of foundation to remove laitance from pores and expose the aggregate. Clean surface of all dust, dirt, organic matter, and debris before laying first course.

.3 Before receiving grout, clean cells of deleterious materials and obstructions. Remove overhanging mortar from inside cells.

.4 Lay block in running bond.

.5 Minimum dimension of the grout spaces containing reinforcing steel shall be not less than 3-1/2 inches.

.6 Full shove head joints.

.7 Bond beam units shall be deep cut units.

.8 Concave tool exterior exposed joints.

.9 Bolts: Grout bolts which are embedded in masonry in place with not less than 1 inch of grout or drypack between the bolt and the masonry. Place vertical bolts inside horizontal ties located within 2 inches of the top at ends of walls. Bolt ties shall be hairpins, hooks or stirrups. Ties shall be not less than #3 bars. Accurately set bolts with templates.

.10 Cut block with carborundum wheel or masonry saw.

.11 Piping other than electric conduit not permitted in block construction unless otherwise indicated.

.12 Chases not allowed unless otherwise indicated.

.13 Install necessary forming and shoring true, rigid and strong enough to carry dead and live loads without deflection. Keep lintel shoring in place at least 14 days after installing grout. Fully embed reinforcing in grout. The thickness of the grout between masonry units and reinforcing shall be a minimum of 1/2 inch.

.14 Place horizontal reinforcement only in bond beam units.

3.3.4 Grouting: Either high lift or low lift systems may be used.

3.3.5 Low Lift Grout System:

.1 This system includes placing reinforcing steel before or during construction of wall, and pouring grout in lifts not to exceed 2 feet, unless cleanouts are provided as specified under High Lift Grout System.

.2 Keep mortar out of grout spaces.

.3 Place reinforcing steel accurately. Hold vertical steel firmly in position. Use frames or other suitable devices to prevent movement or jarring while placing masonry. Place horizontal steel as construction progresses. Lap steel at least 40 bar diameters. Extend steel through points of stoppage to provide required lap. Horizontal steel may be wired temporarily above required position and tagged to indicate its location and vertically marked indicators maintained showing required location of horizontal bars. If doubt exists whether or not steel has been properly placed, use drill to locate steel, or open masonry as required by Architect. Make repairs as directed.

.4 Install anchor bolts with the tail of bolt hooked over a continuous horizontal bar or an added horizontal bar. Dry pack around void where anchor bolt penetrates masonry face shell.

.5 Fill masonry cores with grout and immediately consolidate with a mechanical vibrator having a 3/4 inch head and operating at 5000 RPM submerged.

.6 Pour grout to 1-1/2 inches below top of masonry unit except at finish course. Immediately remove grout or mortar on exposed faces.

.7 Form construction joints by stopping grout 1-1/2 inches below top of wall. If construction is to be stopped for more than 1 hour, form construction joint with block top surface free of mortar or grout.

.8 At jambs use wood where necessary to hold mortar and grout.

3.3.6 High Lift Grout System: Construct high lift concrete block masonry construction in accordance with the following requirements:

.1 Provide cleanout openings for cells at the bottom of each pour. Make the openings before the start of laying, of sufficient size and location to allow flushing away mortar droppings and debris. Cleanout openings may be cut in the blocks or formed in the foundation.

.2 After the laying of masonry units is completed, the cells cleaned, the reinforcing positioned, and inspection completed, close the cleanouts by inserting face shells of masonry units or covering the opening with forms. Face shell plugs shall have a 2 day minimum curing time and shall be adequately braced to resist the pressure of the fluid grout.

.3 Accurately place reinforcing steel inserts and bolts in strict accordance with the approved Shop Drawings. Hold both horizontal and vertical reinforcing in position by wire ties or spacing devices near ends and at intervals not exceeding 160 diameters of the reinforcement.

.4 Place the horizontal reinforcing as the construction progresses and drop the vertical reinforcing into position after the completion of laying if adequate positioning devices are provided to hold the threaded reinforcement.

.5 Use bond beam units wherever possible to facilitate the horizontal flow of grout and at all horizontal bars to provide a minimum opening at cross webs 1-1/2 inches high for the width of the cell.

.6 Fill head and bed joints solidly with mortar. Take care in placing the mortar to keep a minimum of droppings from falling into the block cells.

.7 When adequate cross webs between face shells are not provided, install ties of heavy gage wire embedded in the horizontal mortar joints across continuous vertical

joints or between face shells to prevent "blowouts" due to the hydrostatic pressure of the fluid grout. External ties or braces may also be used for this purpose.

.8 Adequately brace ungrouted walls against wind and other forces during construction.

.9 Remove mortar droppings and overhangs from the foundation or bearing surface, cell walls, and reinforcing. Acceptable methods are by hosing with a jet stream at least twice a day (at midday and quitting time) or by providing a 2 to 3 inch blanket of dry sand over the exposed surface of the foundation, dislodging hardened mortar from the cell walls and reinforcing with a pole or rod and removing the mortar debris with the same cover before clean-up and grouting.

.10 In the high lift grouting method, intermediate horizontal construction joints are not permitted. Plan construction for one continuous pour of grout to the top of the high lift portion of the wall in 4 foot layers or lifts in the same working day. Should a blowout, a breakdown in equipment, or any other emergency occur, cease the grouting operation. An alternate procedure may be used with the approval of the Architect.

.11 To prevent "blowouts" do not pour grout until the mortar has set and cured. However, grout the walls as soon as possible after mortar has cured to reduce shrinkage cracking of the vertical joints. Cleanout closures, reinforcing, bolts and embedded connection items shall be in position before grouting is started. All cells shall be filled with grout.

.12 Handle grout from the mixer to the point of deposit in the grout space as rapidly as practical by pumping and placing methods which will prevent segregation of the mix and cause a minimum of grout splatter on reinforcing and masonry unit surfaces not being immediately encased in the grout lift. Depending upon weather condition and absorption rates of the masonry units, the lift heights and waiting periods may be varied. Under normal weather conditions with typical masonry units limit the individual lifts of grout to 4 feet in height with a waiting period between lifts of 30 to 60 minutes.

.13 Place the first lift of grout to a uniform height within the pour section and vibrate thoroughly to fill all voids. This first vibration shall follow the pouring of the grout by not more than 10 feet. Vibrate or consolidate with approved mechanical vibrators.

.14 After a waiting period sufficient to permit the grout to become plastic, but before it has taken any set, pour succeeding lift and vibrate alternate cells 12 inches to 18 inches into the preceding lift to reconsolidate the preceding lift and close plastic shrinkage cracks or separations from the cell walls.

.15 If the placing of the succeeding lift is going to be delayed beyond the period of workability of the preceding lift, reconsolidate each lift by reworking with the vibrator as soon as the grout has taken its settlement shrinkage.

.16 Repeat the waiting, pouring and reconsolidating steps until the top of the pour is reached. Also reconsolidate the top lift after the required waiting period and fill space left by settlement shrinkage with grout.

3.3.7 Anti-Graffiti Sealer: Fluid applied graffiti and hydrocarbon resistant sealer; Pro-Seal “Anti-Graf”. Surface must be dry, clean, and free of all loose particulate and bond-breaking matter. Apply the first coat to substrate at a coverage rate of approximately 350 square feet per gallon in a horizontal pass. Allow the first coat to dry to the touch. Apply the second coat at a coverage rate of approximately 350 square feet per gallon in a vertical pass. Allow second coat to dry.

.1 Apply anti-graffiti sealer to all exposed exterior concrete masonry unit surfaces.

3.4 TOLERANCES:

3.4.1 Maximum variation from plumb and horizontal plane in the lines and surfaces of walls and columns.

.1 In adjacent - masonry units 1/8 inch.

.2 In 10 feet - 1/4 inch.

.3 In 20 feet - 3/8 inch.

.4 In 40 feet or more - 1/2 inch.

3.4.2 Maximum variation from the plumb for external corners and other conspicuous lines:

.1 In 20 feet maximum - 1/4 inch.

3.4.3 Maximum variations from the level or grades indicated for exposed lintels, walls, or other conspicuous lines:

.1 In a bay or 20 feet maximum - 1/4 inch

.2 In 40 feet or more - 1/2 inch.

3.4.4 Maximum variations of the linear building lines from established position in plan and related portions of columns, and walls.

.1 In bay or 20 feet maximum - 1/2 inch

.2 In 40 feet or more - 3/4 inch.

3.4.5 Maximum variation in cross sectional dimensions of columns and in thickness of walls:

.1 Minus - 1/4 inch

.2 Plus - 1/2 inch.

3.5 ADJUSTING:

3.5.1 Neatly remove damaged masonry and replace with new materials to match adjoining masonry.

3.5.2 Repair damaged masonry and fill interstices between masonry and other materials, and fill pin holes carefully with mortar to match adjoining construction.

3.6 CLEANING:

3.6.1 Carefully clean exposed masonry of grout droppings or stains before mortar or grout sets up and leave perfectly clean. Do not use metal bristled brushes.

3.7 PROTECTION:

Protect top of unfinished construction where mortar or grout has not yet set, with water-repellent covering.

END OF SECTION

02/25/2014

SECTION 04905

ROCK STAINING

PART 1 - GENERAL

1.1 SUMMARY:

1.1.1 Section Includes: Applying an environmentally safe reactive stain, containing no pigments, etc., to rock as indicated on Drawings.

1.1.2 Related Documents: The Conditions of the Contract and Division 1 apply to this section as fully as if repeated herein.

1.1.3 Related Sections: Ballast Roofing System is Specified in Section 07550.

1.2 SUBMITTALS:

1.2.1 Product Data: Include copy of manufacturer's product sheet together with instructions for application of stain 5 days before application. Include proposed methods to control overspray, spillage and protection of adjacent surfaces for approval by the Architect. No staining will be allowed prior to approval. Submit independent lab test showing the stain material is environmentally safe. Submit written statement from manufacturer that product is in compliance with the Buy American Act.

1.2.2 Samples: Submit mock-ups as indicated below.

1.2.3 Submittal procedures and quantities are specified in Division 1.

1.3 QUALITY ASSURANCE:

1.3.1 Applicator Qualifications:

.1 Applicator to have four (4) years of application experience or must be trained and certified by the product manufacturer before staining begins.

.2 Submit description of five (5) previous projects where the application of the stain was made. Descriptions shall demonstrate substantial conformance to the work being performed and include the following information:

a. Name of Project.
b. Location of Project.
c. Description of work performed.
d. Company contact information.

.3 Demonstrate professional ability and financial constancy. Submit the following materials:

a. Contractor qualifications.
b. Proof of necessary licensing (for three years) as required by product, State or local agencies.
c. Insurance certificates as required by State, local, or other applicable agencies.

1.3.2 Mock-Ups:

.1 Apply stain to a 2'-0" by 2'-0" test plot, designated by the Architect. Notify the Architect not less than 5 working days prior to staining the test plot. Prepare and stain the test plot with the materials and tools, equipment ad methods to be used in staining final surfaces. The Architect may order additional test plots until the specified color is obtained.

.2 Use the test plot approved by the Architect as the standard of comparison in determining acceptability of staining.

.3 Do not proceed with staining until Architect has given approval of mock-up.

1.4 DELIVERY, STORAGE AND HANDLING:

1.4.1 Protect stain materials during storage and construction against moisture, soiling, spoiling and physical damage.

1.4.2 Store in manufacturer's original unopened containers plainly marked with contents, and physical properties; as recommended by manufacturer.

PART 2 - PRODUCTS

2.1 MANUFACTURER:

2.1.1 Acceptable product or approved equal:

Natina Products, LLC; Natina Concentrate 500

2.2 MATERIALS:

2.2.1 Rock Stain:

.1 To fully penetrate target surfaces, the stain must be 100% soluble (never in powdered form). The stain must also contain organic acids to etch slightly into rock surfaces to create longer lasting results. Organic acids used will have no negative effects on the environment. No pigment based colorants should be added to achieve the desired color. The stain must react with the rock surface over a period of 5-14 days to produce tan to dark brown colors with a matte finish. The stain must be resistant to fading in the sun.

.2 Stain to produce a brownish earth tone color that will blend stained surfaces with the surrounding earth colors in an environmentally friendly way. The spectrum of brown earth tone colors must be such that alteration of the color and further color development after initial application can be accomplished.

PART 3 - EXECUTION

3.1 PREPARATION:

3.1.1 Prior to applying stain, the areas to be treated shall be identified and approved by the Architect.

3.1.2 Remove oils, dirt, and other contaminants, and dry surfaces prior to staining.

3.2 APPLICATION:

3.2.1 Area to be stained must be stained in accordance with manufacturer's instructions to achieve a color consistent with, or as close as possible to the approved mock-up samples.

3.2.2 Control overspray and protect adjacent surfaces. Stained surfaces must be kept dry for a minimum of 7 days following the application of stain.

3.2.3 Samples shall be prepared until it is determined by the Architect that the finish meets the requirements of the Project. Samples shall meet the following minimum requirements:

.1 Application rates and color tint shall be recorded for future use.

.2 Color selection shall blend and/or compliment the surrounding natural ground plane or target colors indicated by the approved mock-ups.

.3 Tan to dark brown color tones shall be controlled and modified by custom blending the color material, application techniques, or a combination thereof.

3.2.4 Final approval of product samples shall be made by the Architect.

3.3 CLEAN-UP:

3.3.2 Clean stonework after staining and curing is complete; use procedures recommended by stain manufacturer.

END OF SECTION

34-003 – 03/03/2014

SECTION 05120

STRUCTURAL STEEL

PART 1 - GENERAL

1.1 SUMMARY:

1.1.1 Section Includes: Structural steel work complete, including architecturally exposed structural steel (AESS) work.

1.1.2 Related Documents: The Conditions of the Contract and Division 1 apply to this section as fully as if repeated herein.

1.1.3 Related Sections:

.1 Miscellaneous steel fabrications not forming a part of the structural framing system are specified in Section 05500.

.2 High-Performance Coatings are specified in Section 09960.

1.2 DEFINITIONS:

1.2.1 Structural Steel Work: That work defined in the AISC "Manual of Practice".

1.2.2 Architecturally Exposed Structural Steel (AESS): Structural steel members that are exposed to view after interior and exterior building enclosures have been installed.

1.3 REFERENCES:

The editions of specifications and standards referenced herein, published by the following organizations, apply to the construction only to the extent specified by the reference. Refer to Section 01422 for information concerning availability and use of references.

American Institute of Steel Construction (AISC)
American Society for Testing and Materials (ASTM)
American Welding Society (AWS)
Steel Structures Painting Council (SSPC)
Research Council on Riveted and Bolted Joints (RCRBJ)

1.4 SUBMITTALS:

1.4.1 Shop Drawings: Submit shop and erection drawings for review. Review of drawings will cover only the general scheme, design, and character of the details, but not the checking of dimensions nor will such review relieve the Contractor from responsibility for executing the construction in accordance with the contract documents.

.1 Field Measurements: Before starting construction or proceeding with shop and erection drawings, verify measurements, lines, grades, elevations, locations and details of existing field conditions and be responsible for correctness, conformity, accuracy and execution of structural steel construction to conform to actual conditions.

.2 Detailing: Detail in conformance with the AISC Manual "Structural Steel Detailing", except where otherwise indicated.

.3 Field Connections: Clearly show field connections on the erection drawings with complete details as required so that the connections can be made without reference to the design drawings.

.4 Provide setting drawings, templates, and directions for installation of anchor bolt and other anchorages to be installed under other sections.

1.4.2 Product Data:

.1 Submit manufacturer's certification for bolts, nuts, washers, filler material for welding, primer and non-shrink grout.

.2 Submit mill test certificates for mill order steel which can be identified readily by means of heat or melt numbers marked at the mill. Such steel need not be tested as specified in Section 01457.

1.4.3 Submittal procedures and quantities are specified in Division 1.

1.5 QUALITY ASSURANCE:

1.5.1 Qualification of Welding: Qualify welding procedures and welding operators in accordance with the latest edition of AWS D1.1. Provide certifications that welders to be employed have satisfactorily passed AWS qualification tests. If recertification of welders is required, retesting will be the Contractor's responsibility.

1.5.2 Regulatory Requirements: Except as modified by the requirements indicated or specified herein, structural steel construction shall conform to the 2010 California Building Code (CBC), Chapter 22 - Steel.

1.6 DELIVERY, STORAGE, AND HANDLING:

Deliver material in time to insure uninterrupted progress of the construction. Store materials in a manner to preclude damage and permit ready access for inspection and identification of each shipment. Store steel materials, either plain or fabricated, above the ground upon platforms, pallets, skids, or other supports. Keep materials free from dirt, grease, and other foreign matter, and protect from corrosion. Material showing evidence of damage will be rejected; immediately remove from the site.

PART 2 - PRODUCTS

2.1 GENERAL:

Use only new and undamaged materials. Steel which in the opinion of the Architect is badly corroded or physically damaged shall not be incorporated in the construction.

2.2 MATERIALS:

2.2.1 Structural Steel:

.1 Structural Steel, Shapes, Bars and Plates: ASTM A 36 or ASTM 992.

.2 Structural Tubes: ASTM A 500, Grade B or ASTM A 501.

.3 Structural Pipe Members: ASTM A 53, Type E or S, Grade B, with maximum sulfur content of 0.05 percent.

.4 Additional Requirements for Architecturally Exposed Structural Steel (AESS): The cross sectional configuration of abutting members shall match within a tolerance of 1/16 inch. The as fabricated straightness tolerances for members as a whole shall be one half the standard camber and sweep tolerances specified in ASTM A 6. Materials shall be smooth and free of surface blemishes including pitting, seam marks, roller marks, rolled trade names and roughness. Remove such blemishes by grinding or by welding and grinding, prior to cleaning, treating and application of primers.

2.2.2 High Strength Bolts: ASTM A 325.

2.2.3 Common Bolts and Nuts: ASTM A 307. Provide either hexagonal or square heads and nuts except use only hexagonal units for exposed connections.

2.2.4 Filler Metal for Welding: Meet the requirements of the latest edition of AWS D1.1. Electrodes shall be as recommended by their manufacturers for the position and other conditions of actual use. Electrodes shall be E70 series.

2.2.5 Anchor Bolts, Pins and Rods: ASTM A 307, A 36, or A 283, Grade D.

2.2.6 Primer:

.1 Exterior and Interior AESS Shop Primer: Zinc rich epoxy primer. Acceptable products or equal:

Tnemec Co., Inc.; Tneme-Zinc 90-97
Carboline Co.; No. D658
The Sherwin Williams Co.; Zinc Clad 3

.2 Touch-Up Field Priming: In accordance with requirements of Section 09960 High Performance Coatings.

2.2.7 Galvanizing: ASTM A 123.

2.2.8 Galvanizing Repair Compound: High zinc dust content galvanizing repair paint conforming to ASTM A 780 or hot applied zinc rich material. Acceptable products or equal:

American Solder & Flux; Drygalv
Kenco Div.; Galvicon
Metalloy Products Co.; Galvalloy

2.2.9 Metallic, Nonshrink Grout: For grout in concealed locations use premixed factory packaged, ferrous aggregate, grouting compound meeting the requirements of ASTM C 1107. Acceptable products or equal:

Gifford-Hill & Co., Inc.; Supreme Plus
Master Builders; Embeco 636
Sonneborn Building Products; Ferrolith G-DS

2.2.10 Nonmetallic, Nonshrink Grout: For grout in exposed to view locations use premixed, nonmetallic, non-corrosive, non-staining grouting compound containing silica sands, portland cement, shrinkage compensating agents and water reducing agents, meeting the requirements of ASTM C 1107. Acceptable products or equal:

Gifford Hill & Co., Inc.; Supreme
Master Builders; Masterflow 713
The Upco Company; Upcon Nonshrink

2.3 FABRICATION:

2.3.1 General: Fabricate and assemble materials in the shop to the greatest extent possible. Shearing, flame cutting, and chipping shall be done carefully and accurately. Coordinate connection details to concrete. Verify lines, levels, and dimensions, where possible, just before commencing fabrication of connection details. Correct construction that does not fit. Schedule and coordinate construction under this section with that specified elsewhere. When not otherwise indicated or specified, comply with applicable requirements of AISC "Specifications for Design, Fabrication and Erection of Structural Steel for Buildings".

2.3.2 Architecturally Exposed Structural Steel: All copes, miters, and butt cuts in exposed surfaces shall be made with uniform gaps of 1/8 inch if shown to be open joints, or in reasonable contact if shown without gaps. Run-off tabs and back-up plates shall be removed. Welds shall be ground smooth and holes shall be filled with weld metal or body solder and ground smooth. Members and components shall be plumbed, leveled, and aligned to a tolerance not to exceed one-half the standard erection tolerance specified for structural steel.

2.3.3 Connections: Bolt or weld shop connections as indicated. One sided or other types of eccentric connections will not be permitted unless shown in detail on the shop drawings.

.1 Make welded connections in accordance with AWS D1.1-96. Assemble and weld built-up sections by methods which will produce true alignment of axes without warp.

.2 Grind and dress smooth, welds exposed to view in the finished construction, so that the shape and profile of the item welded is preserved.

2.3.4 Joints: Compression joints depending upon contact bearing shall have bearing surfaces truly milled perpendicular to their axis. Cut or dress other joints straight and true.

2.3.5 Holes: Cut, drill, or punch holes at right angles to the surface of the metal. Do not enlarge holes by burning, however holes may be enlarged by careful reaming. Holes in base or bearing plates shall be drilled. Holes shall be provided in members to permit connecting the construction of other trades.

2.3.6 Marking: Mark members for erection in accordance with shop drawings. Members weighing over 4 tons shall have the weight so marked on the member. Long members shall be loaded onto the trucks and so marked.

2.4 SHOP PAINTING:

2.4.1 General: Shop paint structural steel unless otherwise indicated. On embedded steel which is partially exposed, paint the exposed portion and the initial 2 inches of embedded areas only. Do not paint surfaces to be welded or high strength bolted with friction-type connections. Do not paint surfaces which are scheduled to receive sprayed-on fireproofing.

2.4.2 Surface Preparation: After inspection and before shipping, clean steelwork to be painted. Remove loose rust, loose mill scale and spatter, slag or flux deposits as follows:

.1 Surface preparation for concealed members and for interior AESS members shall be power tool cleaning in accordance with SSPC SP3.

2.4.3 Painting: Immediately after surface preparation, apply shop primer in accordance with manufacturer's instructions and at a rate to provide a dry film thickness of not less than 1.5 mils, and in accordance with requirements of Section 09960 High Performance Coatings. Use painting methods which result in full coverage of joints, corners, edges and exposed surfaces.

2.5 GALVANIZING:

2.5.1 General: All steel and ferrous metal items located on the exterior of the building, or otherwise specifically indicated to be galvanized, shall be galvanized by the hot-dip process, meeting the requirements of ASTM A 123. All required hot-dip galvanizing shall be done after fabrication, in the largest sections possible. Items too large for available dip tanks shall be sprayed, by approved methods, with molten zinc to coating thickness of 0.003 inch to 0.004 inch.

2.5.2 Coating Weight: Weight of the zinc coating per square foot of actual surface shall average not less than 2.0 ounces and no individual specimen shall show less than 1.8 ounces.

2.5.3 Repair of Coating: Restore shop galvanized metal necessitating field soldering or welding which in any manner removes original galvanizing, by using galvanizing repair compound in accordance with the manufacturer's instructions.

PART 3 - EXECUTION

3.1 PREPARATION:

3.1.1 Field Measurements and Templates: Secure field measurements required for proper and adequate fabrication and installation. Furnish templates for exact location of items to be embedded in concrete and setting instructions required for installation.

3.1.2 Temporary Shoring and Bracing: In accordance with California Code of Regulations (CCR) Title 8, design and provide temporary shoring and bracing members with connections of sufficient strength to bear imposed loads. Remove temporary members and connections when permanent members are in place and final connections are made. Provide temporary guy lines to achieve proper alignment of structure as erection proceeds.

3.1.3 Temporary Planking: Provide temporary planking as required by CCR Title 8 and as necessary to effectively complete the construction.

3.2 ERECTION:

3.2.1 Setting Base and Bearing Plates: After the supported members have been plumbed, aligned and properly positioned, set base and bearing plates. Support plates on adjustable bolt supports or shims until grout has set. Pack grout solidly between bearing surfaces and bases or plates to ensure that no voids remain. Follow the grout manufacturer's instructions.

3.2.2 Framing: Except as specified herein, erect framing in accordance with the

AISC Code of Standard Practice and CBC. Plan and lay out framing so that cutting will not be required. Erect the construction plumb; square; and true to line, level, and position indicated within tolerances established in the AISC Code of Steel Practice.

3.2.3 Holding and Protection: In assembling and during welding, hold the component parts with sufficient clamps or other adequate means to keep parts straight and in close contact. In welding, take precautions to minimize "lock-up" stress and distortion due to heat. In wind, perform welding only after adequate wind protection is furnished and set up.

3.2.4 Connections: Bolt field connections except where welding is indicated. Perform welding as specified for shop welding. Provide high strength bolted connections for principle bolted connections where indicated. Provide common bolted connections for secondary connections and other bolted connections not indicated otherwise. Install high-strength bolts in accordance with AISC/RCRBSJ "Specifications for Structural Joints Using ASTM A 325 or A 490 Bolts".

3.2.5 Camber: Inspect beams and girders in the shop for camber and align so that they are fabricated and erected with their camber turned upwards. Camber shall not exceed the requirements of the governing documents unless approved by the Architect.

3.2.6 On exposed construction, remove erection bolts, temporary welds, run-off plates and backing strips. Fill holes from erection bolts with plug welds and grind smooth.

3.3 FIELD INSPECTION AND TESTING:

3.3.1 Inspection and testing are specified in Division 1.

3.4 AS ERECTED DRAWINGS:

After all steel has been erected, correct or revise the shop drawings and erection diagrams to correspond with the changes made in the field. Refer to requirements specified in Division 1.

END OF SECTION

02/25/2014

SECTION 05400

COLD FORMED METAL FRAMING

PART 1 - GENERAL

1.1 SUMMARY:

1.1.1 Section Includes: Cold Formed metal framing systems for exterior curtain walls and for load bearing walls and partitions.

1.1.2 Related Documents: The Conditions of the Contract and Division 1 apply to this section as fully as if repeated herein.

1.2 RELATED WORK:

1.2.1 Light gage metal framing and furring systems for interior non-load bearing plaster and gypsum board partitions, and suspension and furring systems for plaster and gypsum board ceilings and soffits is specified in Section 09100.

1.2.2 Furring systems designed for mechanical attachment of semirigid insulation blankets to concrete or masonry walls are specified in Section 07210.

1.2.3 Suspension systems for acoustical ceilings are specified in Section 09510.

1.3 REFERENCES:

The editions referenced herein of specifications and standards published by the following organizations, apply only to the extent specified by the reference. Refer to Section 01422 for information concerning availability and use of references.

American Society for Testing and Materials (ASTM)
American Welding Society (AWS)
American Iron and Steel Institute (AISI)

1.4 SUBMITTALS:

1.4.1 Product Data: Submit framing manufacturer's literature, including a current ICC Evaluation Service Report, showing tabulation of structural properties, load capacities, dimensions, metal gages and type of coating for all framing and furring members. Submit powder driven fastener manufacturer's current International Code Council Evaluation Service Reports (ICC ESR).

1.4.2 Shop Drawings: Submit shop drawings for wall and partition framing systems and special assemblies where the design is not indicated. Show size, gage and cross sections and spacing of framing members; connections including welding procedures and electrodes; and supplemental strapping, bridging, lateral bracing, accessories, and details required for proper installation. Furnish layout of required clips or slots to the metal deck installer well in advance of deck installation.

1.4.3 Submittal procedures and quantities are specified in Division 1.

1.5 QUALITY ASSURANCE:

1.5.1 Regulatory Requirements: Furnish and install wall framing and powder driven fasteners in accordance with the framing and fastener manufacturer's current ICC Evaluation Service Reports.

1.5.2 Fire Rated Assemblies: Where framing units are components of assemblies indicated for a fire-resistance rating, including those required for compliance with the 2010 California Building Code (CBC) Title 24 Part 2, Chapter 7 - Fire-Resistant Materials and Construction, provide units which are listed in the current UL "Fire Resistance Directory" and that have been approved by the State Fire Marshal.

1.5.3 Preinstallation Conference: Before beginning installation of the metal framing systems, hold a conference with representatives of the installers of metal framing systems, door frames, plaster, gypsum board, mechanical and electrical construction, Contractor, Owner's representative, and Architect in attendance. The conference shall assure a clear understanding of the drawings and specifications, resolve possible conflicts and establish coordination between all parties involved.

1.6 DELIVERY, STORAGE, AND HANDLING:

Deliver materials to the project site and store them in adequately ventilated dry locations. If it is necessary to store materials outside, stack them off the ground on a platform and fully protected from the weather.

PART 2 - PRODUCTS

2.1 MANUFACTURERS:

Acceptable manufacturers or equal:

Allied American Studco; Inc.; ICBO #4943P
California Expanded Metal Products Co.; ICBO #3403-P
Western Metal Lath Co.; ICBO #2274
The Steel Network

2.2 MATERIALS:

2.2.1 Hot-dip Zinc Coated Steel: ASTM A 653, 50,000 psi yield strength or greater for 14 and 16 gage studs, and 33,000 psi yield strength for all other members. Framing shall have hot-dip zinc coating complying with designation G60.

2.2.2 Carbon Steel: ASTM A 570, Grade 40, (40,000 psi) or greater for 14 and 16 gage studs and ASTM A 611, Grade C, (33,000 psi yield strength) for all other members. Provide framing components with electro-galvanized finish, conforming to

ASTM A 633, Type RS or shop-applied red oxide, zinc chromate or other similar primer.

2.2.3 Welding Electrodes: AWS A5.1-91 or A5.5-96, E 70.

2.2.4 Powder Driven Fasteners: Types and sizes indicated on the structural drawings. Acceptable manufacturers or equal:

Hilti Corp.; ICBO #1290
ITW/Ramset/Red Head; ICBO #1147
Powder Power Tool Corp.; Drive-It
Simpson Strong Tie Co.

2.2.5 Screws: No. 8 by 3/8 inch cadmium or zinc coated TEKS screws with pan heads.

2.2.6 Wire for Hangers and Ties: ASTM A 641, Class 1 zinc coating, soft temper.

2.2.7 Concrete inserts, expansion anchors, powder driven fasteners, flange clips, and bolts for attachment of hanger wires to overhead construction shall have a rated capacity equal to that of the hanger wire.

2.1.1 Epoxy Intermediate:

.1 Tnemec 66HS Hi-Build Epoxoline 161HS.

.2 Tnemec Fascure Applied at 4.0-6.0 mils DFT.

2.1.2 Urethane Topcoat: Tnemec 73 Endura-Shield. Applied at 2.5-3.0 mils DFT.

2.3 FRAMING COMPONENTS:

2.3.1 Wall Framing Members: Fabricate studs and runners in accordance with ASTM C 955 from hot dip zinc coated steel, of thickness and depths indicated, minimum flange width of 1-5/8 inches. All studs shall be rolled from new steel sheet material and shall not be produced from re-rolled steel.

2.3.2 Joists: C-shaped joists with minimum 1-5/8 inch wide flat flanges and punched webs fabricated from hot dip zinc coated steel, of thickness indicated. All joists shall be rolled from new steel sheet material and shall not be produced from re-rolled steel.

2.3.3 Bridging: Unpunched channel shaped members designed for use with the studs, formed from hot dip zinc coated steel, of thickness indicated.

2.3.4 Strapping, Lateral Bracing, Clip Angles and other Accessories: Manufacturer's standard components formed from hot dip zinc coated steel.

2.3.5 Backing Plates: Steel, 3/16 inch thick, of proper size to accommodate fastenings.

PART 3 - EXECUTION

3.1 INSTALLATION:

3.1.1 General: Conform to rules and practices set forth in the CBC Title 24 Part 2 and AISI "Specifications for Design for Cold Formed Steel Structural Members," and with the manufacturer's printed instructions and recommendations, as applicable.

3.1.2 Cut stock neat and square. Provide members free of kinks and twists. Do not use damaged or distorted materials.

3.1.3 Erect straight, plumb, square, true to lines, levels or elevations indicated, free from excessive twists and bends and braced against racking.

3.1.4 Runner Tracks: Furnish in 8 feet minimum lengths except where wall lengths are shorter than 8 feet. Make tracks continuous by splicing in accordance with the manufacturer's recommended details. Align runner tracks accurately to the partition layout at both base and tops of studs. Secure runner tracks as recommended by the stud manufacturer in International Code Council Evaluation Report for the floor and ceiling construction involved. Provide fasteners at all corners and ends of runner tracks.

3.1.5 Wall Studs: Provide studs in one piece, track to track, no splicing will be permitted. Install bridging as recommended by the framing manufacturer, except as otherwise indicated. Frame both sides of expansion and control joints with separate studs. Do not bridge the joint with components of stud system.

.1 Secure studs to top and bottom runner tracks by either welding or screw fastening at both inside and outside flanges; wire tying of framing components will not be permitted.

.2 Install supplementary framing, blocking, and bracing in metal framing system wherever walls or partitions are indicated to support fixtures, equipment, services, casework, heavy trim and furnishings, and similar work requiring attachment to the wall or partition. Use backing plates of thickness specified herein and of proper size to accommodate fastenings.

.3 Frame wall openings larger than 2 feet square with double stud at each jamb of frame except where more than two are either indicated or recommended by the manufacturer. Install runner tracks and jack studs above and below wall openings. Anchor tracks to jamb studs with stud shoes or by welding, and space jack studs same as full-height studs of wall.

3.1.6 Joists: Provide joists with at least 1-1/2 inch bearing and reinforce over bearings where required to prevent web crippling. Splice joists over bearings only.

Lap and weld splices as recommended by the manufacturer. Provide manufacturer's standard lateral bracing. Secure joists to interior support systems to prevent lateral movement of bottom flange.

.1 Attach members together by either welding or screw fastening; wire tying of framing components will not be permitted.

3.1.7 Welding shall conform with AWS D1.3-89. Undercut shall not exceed 0.01 inch. Welding operators shall be previously certified for the welding to be done.

3.1.8 Touch up abrasions, burns, and welding, including construction activities of other trades, with primers for primed steel or with approved galvanizing compound if galvanized. Remove oil, grease, rust, loose scale, loose coatings, weld slag and other deleterious material before touch-up.

END OF SECTION

02/19/2014

SECTION 05500

METAL FABRICATIONS

PART 1 - GENERAL

1.1 SUMMARY:

1.1.1 Section Includes: Furnishing and installing of all miscellaneous metal fabrications and related connections complete as indicated and as specified.

1.1.2 Related Documents: The Conditions of the Contract and Division 1 apply to this section as fully as if repeated herein.

1.2 REFERENCES:

The editions referenced herein of Federal Specifications (Fed. Spec.) and of the other standards and specifications published by the following organizations, apply to the work only to the extent specified by the reference. Refer to Section 01422 for information concerning availability and use of references.

Aluminum Association (AA)
American National Standards Institute (ANSI)
American Institute of Steel Construction (AISC)
American Society for Testing and Materials (ASTM)
American Welding Society (AWS)
National Association of Architectural Metal Manufacturer's (NAAMM)

1.3 SUBMITTALS:

1.3.1 Shop Drawings:

.1 Submit shop drawings of miscellaneous metal work giving sizes, details of fabrication and construction, methods of assembly and bracing, and locations of hardware, anchors, and accessories.

.2 Submit design calculations prepared by a civil or structural engineer registered in the State of California for prefabricated stairs and railings substantiating the design for vertical and lateral loading in accordance with the 2010 California Building Code (CBC) Title 24 Part 2 requirements.

.3 Include shop and erection details, including cuts, copes, connections, holes, bolts and welds. Indicate welds, both shop and field, by standard welding symbols in the latest edition of AWS D1.1. Show the size, length and type of each weld. All materials to be brazed or soldered shall have connections indicated by symbols which are industry standards.

.4 Contractor shall be responsible for all fabrication and for correct fitting of metal members shown on shop drawings.

1.3.2 Product Data: Submit manufacturer's specifications, anchor details and installation instructions for products used in miscellaneous metal fabrications, including paint products and grout.

1.3.3 Submittal procedures and quantities are specified in Division 1.

1.4 REGULATORY REQUIREMENTS:

Provide products meeting the accessibility requirements of the 2010 California Building Code (CBC) Title 24 Part 2 Chapter 11 - Accessibility; and ADA Accessibility Guidelines for Buildings and Facilities, dated June 26, 1991 as amended April 5, 1993 and January 18, 1994, and July 2004.

1.5 DELIVERY, STORAGE AND HANDLING:

Deliver material in time to insure uninterrupted progress of the work. Store materials in a manner to preclude damage and permit ready access for inspection and identification of each shipment. Store steel materials, either plain or fabricated, above the ground upon platforms, pallets, skids, or other supports. Keep materials free from dirt, grease, and other foreign matter, and protect from corrosion. Material showing evidence of damage will be rejected; immediately remove rejected materials from the work.

1.6 FIELD MEASUREMENTS:

Secure all field measurements required for proper and adequate fabrication and installation of the work. Furnish templates for exact location of items to be embedded in concrete and masonry and setting instructions required for all installation work.

PART 2 - PRODUCTS

2.1 MATERIALS:

2.1.1 Aluminum:

.1 Rolled Structural Shapes: ASTM B 308, 6061 alloy.

.2 Plates: ASTM B 209, 6161-T6 alloy and temper.

.3 Extrusions: ASTM B 221, alloy and temper specified for each item specified herein.

.4 Sheet: ASTM B 209, alloy and temper specified for each item specified herein.

.5 Tubing: ASTM B 241, 6063-T6 alloy and temper.

.6 Castings: ASTM B 26, 214 alloy.

2.1.2 Ferrous Metal:

.1 Steel, Rolled Shapes, Bars and Plates: Standard structural sections, ASTM A 36.

.2 Steel Tubing: ASTM A 501 or ASTM A 500, grade B, seamless.

.3 Steel Pipe: ASTM A 53, Type E or S, Grade B, schedule 40, unless otherwise specified.

.4 Structural Steel Sheet:

a. Uncoated Sheet: Hot-rolled, ASTM A 570; or cold-rolled ASTM A 611, Class 1; of grade required for design loading.

b. Galvanized Sheet: ASTM A 653, Grade SQ, coating designation of G-90 unless otherwise indicated or specified.

.5 Commercial Quality Steel Sheet:

a. Uncoated Sheet: Hot-rolled, ASTM A 569; or cold-rolled ASTM A 366, of grade required for design loading.

b. Galvanized Sheet: ASTM A 653, Grade CQ, coating designation of G-90, unless otherwise indicated or specified.

.6 Corten Sheet Steel: ASTM A 606-4; hot-dipped.

.7 Wrought Iron: ASTM A 29, weldable quality, low carbon mild steel.

.8 Gray Iron Castings: ASTM A 48, Class 30.

.9 Ductile Iron Castings: ASTM A 536, Class 64-45-12.

.10 Malleable Iron Castings: ASTM A 47, grade as selected by the fabricator.

.11 Anchors, Bolts, and Fastenings: ASTM A 307, Grade A and ASTM A 563.

.12 Electrodes: AWS A5.1-91 or A5.5-96 E60XX or E70XX.

.13 Pipe Sleeves: Pipe sleeves through concrete walls and footings shall be standard weight, wrought iron, mild steel, or cast iron sleeves with not less than 1/2 inch space all around between the sleeve and pipe.

.14 Perforated Metal Mesh: Perforated sheet steel; round 5/16 inch diagonal holes on 7/16 inch centers; 6.1 holes per square inch, 47% open. 18 gage material to be used at curved acoustic wall at rear of the performance platform; 20 gage material to be used at all other locations.

2.1.3 Stainless Steel:

.1 Structural Shapes and Bars: ASTM A 276.

.2 Sheets: ASTM A 167.

.3 Pipe: ASTM A 269.

.4 Tubing: ASTM A 312.

2.1.4 Shop Primer:

.1 Exterior Handrails, Guardrails, Perforated Mesh Fabrications, and Sun Screen Canopy: Zinc-rich epoxy primer. Acceptable products or equal:

Tnemec Co., Inc.; Tneme-Zinc 90-97
Carboline Co.; No. D658
The Sherwin Williams Co.; Zinc Clad B

2.1.5 Galvanizing Repair Compound: High zinc dust content galvanizing repair paint meeting the requirements of ASTM A 780 or hot applied zinc rich material. Acceptable products or equal:

American Solder & Flux; Drygalv
Kenco Div.; Galvicon
Metalloy Products Co.; Galvalloy

2.1.6 Quick Setting Hydraulic Cement: Acceptable products or equal:

The Burke Co.; Burke Plug
Minwax Construction Products Div.; Super Por-Rok
Tamms Industries Co.; Tammstech Rapid Rock
Master Builders; Masterflow 713

2.1.7 Nonmetallic, Nonshrink Grout: For grout in exposed to view locations use premixed, nonmetallic, non-corrosive, non-staining grouting compound containing silica sands, portland cement, shrinkage compensating agents and water reducing agents, meeting the requirements of ASTM C 1107. Acceptable products or equal:

Gifford Hill & Co., Inc.; Supreme
Master Builders; Masterflow 713
The Upco Company; Upcon Nonshrink

2.1.8 Polymer Modified Concrete: High strength, polyester resin polymer concrete having the following physical properties:

Property	Test Method	Requirement

Compressive Strength	ASTM C 39	14,000 psi min.
Tensile Strength	ASTM C 78	1,500 psi min.
Water Absorption	ASTM C 140	1.0 % max.

2.1.9 Corten Steel Rust Accelerator: Apple Cider Vinegar.

2.1.10 Corten Steel Rust Neutralizer: Everbrite Coatings, "EZ Prep Cleaner & Neutralizer", www.everbritecoatings.com or equal.

2.1.11 Corten Steel Sealer: Everbrite Coatings, "Everbrite Protective Coating", www.everbritecoatings.com or equal.

2.2 PREFABRICATED PRODUCTS:

2.2.1 Handrail Brackets:

.1 Handrail Brackets for Steel Pipe: Malleable iron brackets with concealed fasteners. Acceptable products or equal:

Julius Blum; No. 378
J.G. Braun; No. 4595

2.2.2 Trench Drain Grating: As indicated on Drawings.

.1 12" NDS Pro Series Channel Drain # 843 with cast iron grate # 847. Acceptable Manufacturer or City approved equivalent:

NDS, Inc.

.2 6" NDS Dura Slope Channel Drain (Pre-sloped = 0.0070) with cast iron grate # DS-231 with 4" down drain # DS-126 to 6" adapter. Acceptable Manufacturer or City approved equivalent:

NDS, Inc.

2.3 FABRICATION:

2.3.1 Metal Surfaces: For fabrication of miscellaneous metal work which will be exposed to view, use only materials which are smooth and free of surface blemishes including pitting, seam marks, roller marks, rolled trade names and roughness.

2.3.2 Fabricate and assemble materials in the shop to the greatest extent possible. Perform shearing, flame cutting, and chipping carefully and accurately. Coordinate all connection details to concrete or masonry. Verify all lines, levels, and dimensions, where possible, just before commencing fabrication of connection details. Correct work that does not fit. Schedule and coordinate work under this section with that specified elsewhere in order to produce a workmanlike installation. When not otherwise indicated or specified, comply with applicable requirements of AISC "Specifications for Design,

Fabrication and Erection of Structural Steel for Buildings". Finish surfaces of exposed members smooth and free of markings, burrs, or other defects.

2.3.3 Bolt, braze or weld connections as indicated. One-sided or other types of eccentric connections will not be permitted unless indicated, and shown in detail on the shop drawings.

2.3.4 Cut, drill, or punch holes at right angles to the surface of the metal; do not enlarged by burning. Drill holes in base or bearing plates. Provide holes in members to permit connecting the work of other trades.

2.3.5 Galvanizing:

.1 Galvanizing for rolled, pressed and forged steel shapes, plates, bars and strip and for assembled steel products: Zinc coating meeting the requirements of ASTM A 123.

.2 Galvanizing for iron and steel hardware: Zinc coating meeting the requirements of ASTM A 153.

2.3.6 Shop Painting: Apply shop primer to surfaces of metal fabrications except those which are galvanized or indicated to be embedded in concrete or masonry, unless otherwise indicated.

2.4 STEEL PIPE HANDRAILS AND GUARDRAILS:

2.4.1 Fabricate handrails and guardrails of steel pipe of sizes indicated.

2.4.2 Join posts, rails and corners by fitting posts to top rails, fitting intermediate rails to posts, mitering corners, groove welding joints and grinding smooth.

2.4.3 Railing splices shall be butted and reinforced by a tight interior sleeve not less than 6 inches long.

2.4.4 Railings may be bent at corners in lieu of mitering and welding provided bends are made in suitable jigs and pipe is not crushed.

2.4.5 Provide wall returns at ends of wall mounted handrails unless otherwise indicated.

2.4.6 Close exposed ends of pipe by welding 3/16 inch thick steel plate in place or by use of prefabricated fittings.

2.4.7 Toe Boards: Where indicated, provide toe boards at railings around openings and at the edge of open-sided floors and platforms. Use 4" by 1/8" plate welded to, and centered between, each railing post.

2.4.8 Shop fabricate handrails in as large sections as practicable.

2.4.9 Shop prime interior handrails and hot dip galvanize exterior handrails.

2.5 GUARD POSTS (BOLLARDS):

Fabricate guard posts from galvanized extra heavy weight (Schedule 80) steel pipe set in a concrete foundation and filled with concrete. Concrete shall be 2000 psi in accordance with Section 03300.

2.6 COUNTER SUPPORTS:

Fabricate counter supports of welded steel angles of sizes and shapes indicated. Grind exposed welds smooth. Provide complete with attachments to framing and counters. Counters are specified in Section 04400 Cut Stone Assemblies.

2.7 STEEL PIPE DOWNSPOUTS:

Fabricate downspouts from galvanized, Schedule 40 steel pipe of sizes indicated. Weld joints and grind smooth. Hold downspouts in position 1 inch clear of walls with galvanized steel straps spaced not more than 10 feet on center and securely fasten to the wall.

2.8 MISCELLANEOUS ROLLED STEEL PLATES AND SHAPES:

Provide for corner guards, sills, anchor plates for elevator guide rails, mechanical equipment supports and other locations indicated or required to complete the work.

2.9 CORTEN STEEL: Provide Corten steel shapes, steel sheets, and fasteners, and low-alloy welding rod for fabrication of Corten steel-clad retaining walls, planter edges and planter box walls, tree rings, and architectural barriers

PART 3 - EXECUTION

3.1 GENERAL REQUIREMENTS:

Steel and miscellaneous metal work shall conform with the applicable requirements of the referenced "Codes and Standards". Details indicated are typical, similar details apply to similar conditions. Check drawings for dimensions, elevation, size, and locations of installations. Supply miscellaneous metal items in ample time for incorporation in the work. Include reinforcing angles, plates, straps, brackets, hangers, clips, lugs, holes, sleeves, shims, other hardware as indicated or required for erection of steel and miscellaneous metal work and as required to complete the work as indicated.

3.2 WELDED CONNECTIONS:

3.2.1 All welders shall be certified qualified welders. All welders welding light gage metal shall be qualified for light gage metal welding.

3.2.2 Welded connections shall be made in accordance with AWS D1.1. All welding shall be done in the shop unless otherwise indicated or specified.

3.2.3 All welds and other connections exposed in the finished work shall be ground and dressed smooth and so that the shape and profile of the item welded is preserved.

3.3 INSTALLATION:

3.3.1 Install miscellaneous metal items as rapidly as the progress of other work will permit. Make splices and field connections with bolts, except where welding or brazing is indicated or approved on the shop drawings. Install fasteners as specified herein.

3.3.2 Set metal work accurately at the established lines and levels. Install work in strict accordance with approved drawings and actual conditions, true and horizontal or perpendicular as the case may be, level and square with angles and edges parallel with related lines of the building.

3.3.3 Anchor bolts, anchors, block-outs and sleeves shall be properly located and built into connecting work. Bolts and anchors shall be preset by the use of templates or such other methods as may be required to locate the anchors and anchor bolts accurately.

3.3.4 After assembly, the various members forming parts of a completed frame shall be aligned and adjusted accurately before being fastened. Tolerances shall conform to the applicable requirements of AISC "Code of Standard Practice". Contact shall be cleaned before the members are assembled. Poor matching of holes shall be corrected by drilling to the next larger size.

3.3.5 Handrails and Guardrails: Install railings in concrete by means of pipe sleeve inserts set and anchored in the concrete. Insert posts into pipe sleeves, plumb and align. Fill the annular space between pipe posts and sleeve inserts with quick setting hydraulic cement.

3.3.6 Wall Supported Items: Attach handrails and other wall hung items by bolting to metal reinforcing installed behind the finish material and welded to the steel studs or by expansion anchors in concrete and masonry walls, and by lag bolting to blocking installed between wood studs.

3.4 GALVANIZED FINISH:

Touch up all damaged galvanized finish due to installation, welding, threading or other work with treatment specified herein.

3.5 CORTEN FINISH: Fill and grind all joints and seams, removing burrs and approximately 2-3 days until desired accelerated “rust” finish is achieved and approved by the Architect. Neutralize rusting procedure with EZ Prep Cleaner and Neutralizer. Apply per manufacturer’s written instructions. Apply three coats of Everbrite Protective Coating as finished sealer. Apply per manufacturer’s written instructions. Metal must be completely dry before applying sealer. Prepare a mock-up, complete with welded, ground, and finished joint and apply accelerant, neutralizer and sealer for Architect’s review and approval prior to any fabrication of any permanently installed Corten steel.

END OF SECTION

34-003 – 02/25/2014

SECTION 06100

ROUGH CARPENTRY

PART 1 - GENERAL

1.1 SUMMARY:

1.1.1 Section Includes: Rough carpentry work.

1.1.2 Related Documents: The Conditions of the Contract and Division 1 apply to this section as fully as if repeated.

1.2 REFERENCES:

The editions of the specifications and standards referenced herein, published by the following organizations, apply to the work only to the extent specified by the reference. Refer to Section 01422 for information concerning availability and use of references.

American Plywood Association (APA)
American Society for Testing and Materials (ASTM)
American Wood Protection Association (AWPA)
National Institute for Standards and Technology (NIST)
Redwood Inspection Service (RIS)
U. S. Department of Commerce (USDC)
West Coast Lumber Inspection Bureau (WCLIB)
Western Wood Products Association (WWPA)

1.3 SUBMITTALS:

1.3.1 Product Data: Submit copies of current International Code Council Evaluation Service Reports (ICC ESR's) for framing anchors, powder driven fasteners, and fire-retardant treated wood.

1.3.2 Wood Treatment Data: Submit chemical treatment manufacturer's instructions for handling, storing, installing and finishing of treated materials.

.1 Preservative Treatment: For each type specified, include certification by treating plant stating type of preservative solution and pressure process used, net amount of preservative retained and conformance with applicable standards.

.2 Water Borne Treatment: Include statement that moisture content of treated materials was reduced to levels specified before shipment to project site.

.3 Fire-Retardant Treatment: Include certification by treating plant that treatment material complies with specified standard and other requirements.

1.3.3 Submittal procedures and quantities are specified in Division 1.

1.4 QUALITY ASSURANCE:

1.4.1 Regulatory Requirements:

.1 Rough carpentry shall conform to the 2010 California Building Code (CBC), Chapter 23 – Wood.

.2 Framing anchors and powder driven fasteners shall be furnished and installed in accordance with the manufacturer's current ICC ESR's.

1.4.2 Grade Marks:

.1 Identify lumber by the official grade mark of WCLIB, WWPA or RIS.

.2 Identify plywood by the official grade mark of APA.

.3 Identify pressure preservative treated lumber and plywood with the official grade mark of AWPA.

.4 Identify fire retardant treated lumber with appropriate classification marking of Underwriters Laboratories, Inc., U.S. Testing, Timber Products Inspection or other testing and inspecting agency acceptable to authorities having jurisdiction.

1.5 DELIVERY, STORAGE, AND HANDLING:

1.5.1 Deliver materials to the site in an undamaged condition.

1.5.2 Store lumber and plywood at the site under cover or otherwise protected against exposure to weather, raised above the ground and out of contact with other damp or wet surfaces. Stack lumber and plywood and provide for air circulation within and around the stacks and under temporary coverings. For pressure treated lumber and plywood, provide spacers between courses to permit air circulation.

1.6 PROJECT CONDITIONS:

Cooperate with other trades in coordinating their work with the work of this section. Provide wood grounds, blocking and nailers where indicated or as required for integration of work of other trades into the structure.

PART 2 - PRODUCTS

2.1 LUMBER:

2.1.1 Lumber Standards: Manufacture lumber to comply with NIST PS 20-05 "American Softwood Lumber Standard" and with applicable grading rules of inspection agencies specified herein.

2.1.2 Moisture Content at Time of Placing:

.1 Untreated Lumber: Not exceed 19 percent.

.2 Treated Lumber: Not exceed 19 percent after pressure treatment.

2.1.3 Sizing and Surfacing: Sizes indicated are nominal; provide actual sizes in accordance with PS 20-05. Provide dressed lumber, S4S, except as otherwise indicated.

2.1.4 Dimension Lumber: Provide lumber of the grades and species listed below for the various purposes, graded in accordance with WCLIB "Standard Grading Rules No. 17", WWPA "Western Lumber Grading Rules 91", or RIS "Standard Specifications for Grades of California Redwood Lumber," Latest Edition.

.1 Sill Plates, Cants, Roof Nailers, and Roof Curbs: Standard or better grade Light Framing; No. 2 or better grade Structural Light Framing; or Stud grade of any commercial softwood species. All lumber used for sill plates, cants, roof nailers, and roof curbs shall be pressure preservative treated.

.2 Blocking, Nailers, Top Plates and Bracing: Standard or better grade Light Framing; No. 2 or better grade Structural Light Framing; or Stud grade of any commercial softwood species.

.3 Studs: Construction grade Light Framing; No. 1 grade Structural Light Framing; or Stud grade of any commercial softwood species.

.4 Joists, Headers, Ledgers, and Stair Stringers: No. 2 or better grade Joists and Planks of Douglas fir or Larch.

.5 Rafters: No. 1 grade Structural Light Framing of Douglas Fir or Larch.

.6 Beams, Girders, and Stringers: No. 1 grade Beams and Stringers of Douglas Fir or Larch.

.7 Columns and Posts: No. 1 grade Posts and Timbers of Douglas Fir or Larch.

2.2 PLYWOOD:

2.2.1 Plywood Standards: Manufacture plywood to comply with PS 1-07 – Structural Plywood.

2.2.2 Wall Sheathing: APA Rated Sheathing, CDX grade, Exposure 1 durability classification, 3/8 inch thick or as otherwise indicated on Structural and Architectural Drawings.

2.2.3 Roof Sheathing: Structural I rated, CDX grade, Exterior exposure durability classification, 19/32 inch thick or as otherwise indicated on Structural Drawings.

2.2.4 Plywood Backing Panels: For mounting electrical or telephone equipment, provide fire-retardant treated plywood panels designation, C-D Plugged grade, interior type with exterior glue, 3/4 inch thick, unless otherwise indicated.

2.2.5 Stair Treads and Risers: Exterior type C-C plugged grade, 3/4 inch thick.

2.3 PRESSURE TREATMENT:

2.3.1 Preservative Treatment: Where lumber or plywood is indicated or specified herein to receive pressure preservative treatment, treat materials in accordance with AWPA Standard U1-08. Complete fabrication of treated items before treatment, where possible. If cut after treatment, coat cut surfaces with heavy brush coat of same chemical used for treatment.

2.3.2 Fire-Retardant Treatment: Where fire-retardant treated wood is indicated, pressure impregnate lumber and plywood with fire-retardant chemicals to meet the requirements of AWPA Standard U1-08; identify fire-retardant-treated wood with appropriate classification marking of Underwriters Laboratories, or other testing and inspecting agency acceptable to local authorities.

2.4 GYPSUM SHEATHING:

Gypsum sheathing board consisting of noncombustible gypsum core incorporating a water-resistant material, surfaced on face, back and long edges with water-repellent paper meeting the requirements of ASTM C 79-04, Type X, V-shaped tongue and groove long edges, square ends, 5/8 inch thick.

2.5 WOOD FIBER SOUND BOARD:

Cellulosic cellulose fiber insulating board meeting the requirements of ASTM C 208-95 (2001), 1/2 inch thick, 0.82 pounds per square foot density, Sound Deadening Grade. Acceptable product or equal:

Celotex Corp.; Soundstop

2.6 MISCELLANEOUS MATERIALS:

2.6.1 Building Paper: Fully waterproof Kraft paper conforming to Fed. Spec. UU-B-790A (1), Type I, Grade B (moderate water vapor resistance).

2.6.2 Rough Hardware:

.1 Furnish items of rough hardware, connections, bolts, required to complete the work. Where carpentry work is exposed to weather, in ground contact, or in area of high relative humidity, provide nails, bolts, nuts, washers and other fasteners with a hot-dipped zinc coating in accordance with ASTM A 153.

.2 Nails: Common wire. Use ring shank nails for floor sheathing. Special nailing requirements shall be as indicated, complying with ASTM F 1667.

.3 Bolts: Standard mild steel, square or hexagonal head machine bolts with matching nuts and cut washers, or carriage bolts with square nuts and cut washers as indicated.

.4 Lag Bolts and Screws: Sizes indicated.

.5 Toggle Bolts: Sizes indicated.

2.6.3 Powder Driven Fasteners: Provide fastener systems complete with all necessary washers, nuts and other appurtenances. Acceptable products or equal:

Hilti, Inc.
ITW Ramset

2.6.4 Framing Connectors: Provide galvanized steel joist hangers and other framing anchors having the minimum design and load capacities indicated. Load capacities shall be those shown in the manufacturer's current ICC ESR's. Acceptable manufacturers or equal:

Simpson Strong Tie
Silver Metal Products, Inc.

2.7 MISCELLANEOUS ITEMS:

Rough carpentry work and miscellaneous items and their related components are not necessarily individually described. The most important features and those requiring detail description are mentioned. Furnish rough carpentry work and miscellaneous items not mentioned or described and install in accordance with the intent of the drawings and specifications and as required to complete the work.

PART 3 - EXECUTION

3.1 EXAMINATION:

Before commencing work, check concrete and masonry walls, steel and glue-laminated beams, and other construction supporting rough carpentry work to ensure that they are set to the lines and levels indicated within the specified tolerances. Do not proceed until discrepancies have been corrected or adjusted.

3.2 INSTALLATION:

3.2.1 Install wood framing, making proper provisions for work of other trades. Do framing of wood required to accommodate plumbing, heating and ventilating, electrical, and other trades. Fit neatly around exposed items, such as outlet boxes, conduit, pipes, and ducts.

3.2.2 Wood Grounds, Nailers, Blocking and Sleepers:

.1 Provide wherever indicated and where required for screeding or attachment of other work. Form to shapes as indicated and cut as required for true line and level of work to be attached. Coordinate location with other work involved.

.2 Attach to substrates as required to support applied loading. Countersink bolts and nuts flush with surfaces, unless otherwise indicated. Build into masonry during installation of masonry work. Where possible, anchor to formwork before concrete placement.

.3 Provide permanent grounds of dressed, preservative treated, key beveled lumber not less than 1-1/2 inches wide and of thickness required to bring face of ground to exact thickness of finish material involved. Remove temporary grounds when no longer required.

3.2.3 Wood Furring:

.1 Install plumb and level with closure strips at edges and openings. Shim with wood as required for tolerance of finished work. Firestop furred spaces on walls at each floor level and at ceiling line of top story, with wood blocking or noncombustible materials, accurately fitted to close furred spaces.

.2 Furring to Receive Gypsum Board: Provide 1" by 2" furring at 16 inches on center, vertically, unless otherwise indicated.

.3 Furring to Receive Lath and Plaster: Provide 1" by 2" furring at 16 inches on center, vertically, unless otherwise indicated.

.4 Suspended Furring: Provide size and spacing indicated, including hangers and attachment devices. Level to a tolerance of 1/8 inch in 10 feet, except 1/4 inch in 10 feet for plaster.

3.2.4 Wall Framing:

.1 Provide single plates at bottom and double at top, except as otherwise indicated. Stagger splices in top plates not less than 48 inches except as otherwise indicated. Reinforce plates on both sides which are cut for the passage of pipes and similar items, with 12 gage by 1-1/2" by 18" steel plates punched for eight 16d nails.

.2 Anchor plates of exterior and interior shear walls to concrete foundations with fasteners of size, length and spacing indicated. Unless otherwise indicated, anchor plates for other partitions to concrete floors with 0.156" diameter by 3" long powder driven fasteners spaced not to exceed 32 inches apart.

.3 Furnish and set columns and studding of size, spacings, and locations indicated. Unless indicated otherwise, studding for furring and partitions shall be 2" by 4" set 16 inches on center. Extend cripples to the floor plates. Install blocking in studding over 8 feet tall at half height, double-nailed at each end. Construct corners and intersections with not less than 3 studs.

.4 Frame openings with double jamb studs and headers of sizes indicated. Set headers on jamb studs and nail securely.

.5 Provide diagonal bracing for exterior walls except where walls are covered with plywood sheathing or siding. Brace walls at each external corner with 1" by 4" wood let into studs or metal bracing extending at a 45 degree angle over top and bottom plates.

3.2.5 Joist Framing: Set joists with the crown edge up with minimum 1-1/2 inch bearing on wood or metal supports. Where openings occur, headers and supporting joists shall be doubled and headers and tail joists shall be hung on metal hangers.

.1 Framing system and sizes shall be as indicated. Install solid blocking at ends and over supports. Provide 2" by 3" cross-bridging, metal bridging or solid blocking in spans where indicated or at 8 feet on center in spans over 10 feet where not indicated.

.2 Lap joists framing from opposite sides of beams, girders or partitions not less than 4 inches or structurally tie opposing members together with metal framing connectors. Over supports provide solid blocking of same size as joists.

.3 Provide doubled floor joists under partitions running parallel with the joists. Where necessary for passage of pipes or ducts space doubled joists as required for pipe or duct clearance and install solid blocking between joists at 4 feet on center and nail securely.

.4 Install joist hangers where indicated using nails of sizes and types listed in manufacturer's ICC ESR’s.

.5 Include furring or stripping, properly shimmed and leveled, where indicated or required for ceiling finishes.

3.2.6 Rafter Framing: Set rafters accurately to form a true plan. Notch rafters to provide full bearing on plates.

.1 Provide headers and trimmers around openings in the roof. Headers and trimmers carrying or supporting two or more rafters shall be doubled.

3.2.7 Stair Framing: Provide stair framing members of size, space and configuration indicated, or, if not otherwise indicated, to comply with the following requirements:

.1 Stringer Size: 2" by 12" minimum.

.2 Notching: Notch stringers to receive treads, risers and supports; leave at least 3-1/2 inches of effective depth.

.3 Stringer Spacing: Not less than 3 stringers for each 3 feet clear width of stair.

.4 Provide rough stringers cut accurately to provide uniform treads and risers between landings. Install plywood treads and risers using ring shank nails.

3.2.8 Fire Blocking: Install as indicated and where required by the CBC Chapter 23.

3.2.9 Openings: Provide openings for mechanical and electrical equipment, ducts, other equipment. Where one or more joists are cut, the joists supporting the trimmers shall be doubled and well spiked. Where continuation of 3 or more joists is interrupted, reinforce the abutting headers and joists with approved type of joists hangers.

.1 Frame openings in walls required for the installation of cabinets and other wall hung items, including telephone and electrical terminals, stair handrails, shelves, toilet partitions, fixtures and equipment.

3.2.10 Subflooring and Wall and Roof Sheathing: Install as indicated. Provide solid bearing under edges of subflooring and sheathing. Lay sheets with 1/16 inch space between sheets at ends and 1/8 inch space at edge joints. Inspect subflooring and roof sheathing carefully as soon as it is laid to determine its adequacy to support workmen and the normal loads which it will receive. Protect roof sheathing from weather until roofing is installed by applying building paper or polyethylene sheeting.

3.2.11 Secure approval of Architect before cutting, drilling or notching wood members that may weaken the member. Lay out framing so that structural members will not require cutting for openings, pipes, vents, ducts.

3.2.12 Gypsum Wall Sheathing: Fasten to exterior face of stud framing using 1-1/2 inch long, 11 gage galvanized roofing nails with 3/8 inch head or 15 gage divergent point galvanized staples 1/2 inch wide by 1-1/2 inches long. Keep perimeter fasteners 3/8 inch from edges and ends of boards. Fit board tightly against each other and around openings. Install boards with grooved edge down. Center end joints over supports and stagger in each course.

3.2.13 Wood Fiber Sound Board: Locate fasteners not less than 3/8 inch nor more than 1/2 inch from edges and ends of board. Drive fasteners perpendicular to the board surface with heads set even with the surface. Attach board starting from the center of each panel and proceeding toward the outer edges. Fasten in place with screws over metal framing and with nails or screws over wood framing.

3.3 LUMBER FASTENINGS:

3.3.1 Nailing and bolting of wood members shall conform to the minimum requirements of the CBC Chapter 23, and as specified herein and as indicated.

3.3.2 Bolting: Bolts shall be standard stock machine bolts as specified. Exposed bolts shall be all square or hexagonal head with matching nuts. Retighten bolted connections before final acceptance or, in the case of bolted connections in concealed locations, immediately before the area is sealed off.

3.3.3 Nailing: Connectors shall be as indicated in UBC Table 2304.9.1 where not otherwise indicated. Nails shall be untreated steel for interior work and concealed framing, and galvanized for all exposed work on exterior. Unless connectors are detailed or steel connectors indicated, nails shall not be driven closer together than 1/2 of their length nor closer to the edge of a member than 1/4 their length. When wood tends to split with size of nail used, pre-drill holes for nails. Penetration of nails or spikes into pieces shall be not less than one-half the length of the nail or spike.

3.3.4 Washers: Provide all bolts and lag screws bearing on wood with cut washers except where malleable iron or plate washers are indicated on the structural drawings.

3.3.5 Metal Framing Connectors: Install connectors in accordance with the manufacturer's current ICC ESR's.

3.4 ROUGH HARDWARE:

Furnish and install all stock items of rough hardware as indicated or required, including clips, anchors, hangers, bolts, ties, and plates for connecting wood framing members to wood, concrete, or steel, except as specified to be provided under other connections.

3.5 BUILDING PAPER:

3.5.1 Install building paper horizontally over all plywood sheathing on exterior walls and elsewhere as indicated. Lap 2 inches to weather, with 4 inch side laps. Secure sufficiently with galvanized nails to hold in place without sagging until finish is applied. Building paper behind cement plaster, where required, is specified in Section 09208.

3.5.2 Install building paper on all plywood subfloors over first layer of plywood. Sweep floors clean before laying building paper. Lay building paper over plywood lapping all sides and ends 6 inches and secure with staples sufficiently to hold paper securely and smoothly in place until underlayment plywood is stapled in place. There shall be no tears or holes in building paper, and suitable protection shall be provided until underlayment plywood is in place.

3.5.3 Install waterproof building paper around all openings in wood framed exterior walls and elsewhere as indicated, properly flashed with felt.

END OF SECTION

02/25/2014

SECTION 06174

WOOD I JOISTS

PART 1 - GENERAL

1.1 SUMMARY:

1.1.1 Section Includes: Prefabricated plywood web I joists.

1.1.2 Related Documents: The Conditions of the Contract and Division 1 apply to this section as fully as if repeated herein.

1.2 SUBMITTALS:

1.2.1 Shop Drawings: Submit shop drawings complete with all installation details, plan layouts, calculations necessary to meet code requirements, appropriately sealed by a California Registered Civil Engineer.

1.2.2 Submittal procedures and quantities are specified in Division 1.

1.3 DELIVERY, STORAGE, AND HANDLING:

1.3.1 Deliver materials to the project site in bundles banded together for handling and shipping.

1.3.2 Handle joist members so that they are kept in an upright position at all times.

PART 2 - PRODUCTS

2.1 MATERIALS:

Floor and roof joists shall be of the type and series indicated. Acceptable manufacturer or equal:

Trus Joist MacMillan Corporation
Red Built

PART 3 - EXECUTION

3.1 EXAMINATION:

Examine the areas and conditions under which work will be performed. Correct conditions detrimental to timely and proper completion of the work. Do not proceed until unsatisfactory conditions are corrected.

3.2 INSTALLATION:

Install plywood web joists at locations indicated. Secure joists to bearing plates through nailing holes with 10 gage short nails. Install continuous bridging at locations indicated, nailing to bridging clips with 10 gage short nails. Lap bridging at joints and install alternately on either side of bridging clips. Entire installation shall conform with applicable code requirements. Provide bearing plates and bolt to steel members as indicated and required. Assure adequate lateral support until the sheathing material has been applied.

END OF SECTION

34-001 – 01/27/2014

SECTION 06180

GLUE LAMINATED WOOD

PART 1 - GENERAL

1.1 SUMMARY:

1.1.1 Section Includes: Glue laminated timber work.

1.1.2 Related Documents: The Conditions of the Contract and Division 1 apply to this section as fully as if repeated herein.

1.2 REFERENCES:

The editions of specifications and standards referenced herein, published by the following organizations, apply to the work only to the extent specified by the reference: Refer to Section 01422 for information concerning availability and use of references.

American Institute of Timber Construction (AITC)
American National Standards Institute (ANSI)
American Society for Testing and Materials (ASTM)
American Wood Protection Association (AWPA)

1.3 SUBMITTALS:

1.3.1 Shop Drawings: Submit shop drawings showing dimensions of each member and layout of entire glue laminated wood structural system. Include large scale details of connections, connectors, and other accessories.

1.3.2 Product Data: Submit product data including specifications and installation instructions covering lumber, adhesives, fabrication process, preservative treatment, accessories and protection.

1.3.3 Certifications:

.1 Submit an AITC inspection certificate, signed by the fabricator, stating that the glue laminated wood members were produced in accordance with ANSI/AITC A190.1-02.

.2 Submit certification by treating plant that required treatments comply with specified standards.

1.3.4 Samples: Submit 48 inch long by full width by depth of 3 laminations, showing range of variation expected in appearance of structural glued laminated units, including specified treatment, if any.

.1 Apply specified factory finish to 3 sides of half length of each sample.

1.3.5 Submittal procedures and quantities are specified in Division 1.

1.4 QUALITY ASSURANCE:

1.4.1 Regulatory Requirements: Except as modified by the requirements specified herein or as indicated, provide glue laminated wood meeting the requirements of the 2010 California Building Code (CBC) Title 24 Part 2, Chapter 23A - Wood.

1.4.2 Standards: Comply with ANSI/AITC A190.1-02, "Structural Glued Laminated Timber".

1.4.3 Manufacturer Qualifications: Provide factory glued structural units produced by an AITC licensed firm qualified to apply the AITC "Quality Inspected" mark.

.1 Factory mark each piece of glued laminated structural units with AITC Quality Inspected mark.

1.5 DELIVERY, STORAGE, AND HANDLING:

Keep glued laminated structural units dry during delivery, storage, handling, and erection, by maintaining factory-applied protective covering in weather tight and light proof condition, or by applying other watertight protection. Maintain factory applied protective covering until building enclosure is completed to the extent necessary for protection of interior glue laminated work and until final finishing of exterior work is ready to proceed. Do not store glue laminated wood in areas of excessively high relative humidity.

PART 2 - PRODUCTS

2.1 MATERIALS:

2.1.1 Lumber: Comply with ANSI/AITC A190.1-02 and applicable lumber association standards cited therein for grades required to achieve requirements for design values, appearance, fabrication limitations and species.

2.1.2 Preservative Treatment: Where preservative treatment is indicated, pressure treat lumber before gluing, in accordance with AWPA C28 with pentachlorpohenol in AWPA Type B or C solvent or waterborne preservatives.

2.1.3 Laminating Combinations: Provide laminating combinations meeting the requirements of ANSI/AITC A190.1-02 and provide the following allowable design values based on dry condition of service.

Bending (Fb): 2400 psi
Horizontal Shear (Fv): 165 psi
Modulus of Elasticity (E): 1,700,000 psi
Compression Perpendicular to Grain (Fc): 650 psi on tension face and 560 psi on compression face

2.1.4 Lumber Species: Douglas Fir-Larch.

2.1.5 Adhesives: Wet-use adhesives complying with the requirements of ANSI/AITC A190.1-02.

2.1.6 End Sealer: Manufacturer's standard transparent, colorless wood sealer, effective in retarding transmission of moisture at cross grain cuts.

2.1.7 Penetrating Sealer: Manufacturer's standard translucent penetrating wood sealer which will not interfere with application of wood stain and transparent finish. Refer to Section 09900 for field applied finishes.

2.1.8 Connectors, Anchors, Accessories: Provide fabricated steel (ASTM A 36) shapes, plates and bars, welded into assemblies of types and sizes indicated, or if not indicated, manufacturer's standard units for timber sizes indicated. Provide steel bolts (ASTM A 307), lag bolts, nails, and other standard fasteners required for installation.

.1 Finish: Where "Wet-Use" work is indicated, finish fabricated assemblies with hot-dip zinc coating, ASTM A 153, including bolts and other fasteners.

2.2 FABRICATION:

2.2.1 Structural glued laminated wood shall be manufactured and fabricated in accordance with ANSI/AITC A190.1-02 and CBC Chapter 23.

2.2.2 Joints:

.1 End joints may be either a plane scarf having a slope not steeper than 1:10 or an approved finger joint. Unless specifically approved by the Architect, there shall be a minimum of 60 test specimens provided to qualify an end joint. All portions of end joints in adjacent laminations shall be separated in accordance with ANSI/AITC A190.1 and ASTM D 3737 and CBC Chapter 23. The areas requiring 6 inch spacing shall be shown on the approved Shop Drawings. Joints in adjacent laminations of arched members shall be separated as required for bending members. There shall be no knots or other defects within 6 inches of finger joints in areas where a 6 inch separation of joints in adjacent laminations is specified or within 2 knot diameters elsewhere.

.2 Finger joints shall not be used unless specifically approved by the Architect.

2.2.3 Camber: The required camber for the fabrication of each member shall be as indicated, and may be either circular or parabolic, at manufacturer's option.

2.2.4 Appearance Grade: Comply with AITC 110-01.

.1 Exposed and Partially Exposed Members: Architectural appearance grade.

.2 Other Members: May have an Industrial appearance grade.

2.2.5 Preservative Treatment: Laminate members from preservative treated lumber. After dressing and end cutting each member to final size and shape, apply a heavy brush coat of same or compatible preservative treatment (in a light petroleum solvent) to surfaces cut to a depth of more than 1/16 inch. Apply in accordance with AWPA Standard U1-08.

2.2.6 End Cut Sealing: Immediately after end cutting each member to final length, and after preservative treatment, apply a saturation coat of end sealer to ends and other cross cut surfaces, keeping surfaces "flood coated" for not less than 10 minutes.

2.2.7 Seal Coat: After fabrication and sanding of each unit, and end coat sealing, apply a heavy saturation coat of penetrating sealer on surfaces of each unit.

2.3 FACTORY FINISHING:

Wiped Stain Finish: Manufacturer's standard "wet appearance" penetrating acrylic stain and sealer, oven dried, and resistant to mildew and fungus. Provide color selected by the Architect from manufacturer's standard colors.

2.4 FACTORY APPLIED PROTECTION:

Individually wrapped each Architectural grade member for shipment with heavy water-resistant paper in accordance with AITC 111-05. Individually or bundle wrap Industrial grade members at manufacturer's option.

2.5 TESTS AND INSPECTION:

Specified in Division 1.

PART 3 - EXECUTION

3.1 INSTALLATION:

3.1.1 General: Erect members as indicated and in accordance with AITC 104-03 and the approved Shop Drawings and instructions of the fabricator.

3.1.2 Cutting: Avoid cutting glue laminated members during erection to the greatest extent possible. Except for fastener drilling and other minor cutting, coat cuts with end sealer used in fabrication.

.1 Where treated members must be cut during erection, apply a heavy brush coat of the same preservative treatment, complying with AWPA Standard U1-08.

3.2 PROTECTION:

Protect the members during the course of erection and construction so that members are in good condition upon acceptance of the project.

END OF SECTION

02/25/2014

SECTION 07210

BUILDING INSULATION

PART 1 - GENERAL

1.1 SUMMARY:

1.1.1 Section Includes: Thermal and acoustical insulation within the building.

1.1.2 Related Documents: The Conditions of the Contract and Division 1 apply to this section as fully as if repeated herein.

1.1.3 Related Sections: Mineral wool firestopping insulation is specified in Section 07840.

1.2 REFERENCES:

The editions of the specifications and standards referenced herein, published by the following organizations, apply to the work only to the extent specified by the reference. Refer to Section 01422 for information concerning availability and use of references.

American Society for Testing and Materials (ASTM)
U.S. General Services Administration, Federal Specification (FS)
Underwriters Laboratories (UL)

1.3 DESCRIPTION OF INSULATION SYSTEMS:

1.3.1 Thermal insulation within light gaged metal framed exterior walls, and for exterior masonry walls furred with light gaged metal studs:

.1 Type: Fire resistant, kraft-foil faced, mineral fiber, batts or blankets.

.2 Thickness: As required to obtain an R-value of not less the R-11.

.3 Surface Burning Characteristics: Maximum flame-spread and smoke-developed indices of 25 and 50, respectively.

.4 Installation Method: Taped to face of studs.

1.3.2 Thermal insulation for furred exterior concrete and masonry walls:

.1 Type: Rigid polystyrene board, rigid polyurethane board, or foil faced, rigid mineral fiber board.

.2 Thickness: As required to obtain an R-value of not less the R-9.

.3 Surface Burning Characteristics: Maximum flame-spread and smoke-developed indices of 25 and 50, respectively.

.4 Installation Method: Held in place by Z- or T- shaped fastened to face of concrete or masonry wall.

1.3.3 Thermal insulation on underside of roof deck:

.1 Type: Fire resistant, kraft-foil faced mineral fiber batts or blankets.

.2 Thickness: As required to obtain an R-value of not less the R-38.

.3 Surface Burning Characteristics: Maximum flame-spread and smoke-developed indices of 25 and 50, respectively.

.4 Installation Method: Spindle anchors to underside of deck.

1.3.4 Sound retardant insulation within interior partitions:

.1 Type: Unfaced mineral fiber batts or blankets.

.2 Thickness: Not less than 2-3/4 inches.

.3 Surface Burning Characteristics: Maximum flame-spread and smoke-developed indices of 25 and 50, respectively.

.4 Installation Method: Friction fit between studs.

1.3.5 Sound retardant insulation over suspended ceilings:

.1 Type: Unfaced mineral fiber batts or blankets.

.2 Thickness: Not less than 2-3/4 inches.

.3 Surface Burning Characteristics: Maximum flame-spread and smoke-developed indices of 25 and 50, respectively.

.4 Installation Method: Friction fit between studs.

1.3.6 Sound retardant insulation on face of concrete and masonry walls:

.1 Type: Neoprene faced mineral fiber blankets.

.2 Thickness: Not less than 1-1/2 inches.

.3 Surface Burning Characteristics: Maximum flame-spread and smoke-developed indices of 25 and 50, respectively.

.4 Installation Method: Spindle anchors to inside face of wall.

1.4 SUBMITTALS:

1.4.1 Certificates of Conformance: Submit certificates from the manufacturer stating that materials meet the R-value and fire resistance and surface burning characteristics specified herein.

1.4.2 Samples: Submit samples of each type of spindle anchor proposed for use.

1.4.3 Manufacturer's Instructions: Submit the manufacturer's printed instructions for installing the spindle anchors for reference.

1.4.4 Submittal procedures and quantities are specified in Division 1.

1.5 REGULATORY REQUIREMENTS:

1.5.1 Fire Performance Characteristics: Where insulation is used within a fire rated wall assembly, provide insulation materials which are identical to those whose fire performance characteristics, as listed for each material or assembly of which insulation is a part, have been determined by testing, in accordance with methods specified below, by UL or other testing and inspecting agency acceptable to authorities having jurisdiction.

.1 Surface Burning Characteristics: International Building Code (IBC), Standard No. 8-1 or ASTM E 84.

.2 Fire Resistance Ratings: ASTM E 119.

.3 Combustibility: ASTM E 136.

1.5.2 Plastic foam insulation shall comply with the 2010 California Building Code (CBC) Sec. 2602.

1.5.3 Certificate: As required by CBC Title 24, post a certificate containing the building permit number and the insulation manufacturer's name, material identification and R-value and stating that the insulation has been installed in accordance with the plans and specifications.

1.6 DELIVERY, STORAGE AND HANDLING:

1.6.1 Deliver insulation to the site in unopened containers labeled with the manufacturer's name and brand designation and R-value rating.

1.6.2 Store insulation in a dry, well ventilated, water-tight enclosure providing protection from damage. Do not store plastic insulation where it will be exposed to sunlight or to sources of ignition.

1.7 SEQUENCING AND SCHEDULING:

1.7.1 Do not install insulation until construction has progressed to the point that inclement weather will not damage or wet the insulation material.

1.7.2 Install insulation after electric wiring, plumbing and other concealed work is in place.

1.7.3 Insulation shall not be closed in until it has been inspected and approved.

PART 2 - PRODUCTS

2.1 INSULATION MATERIALS:

2.1.1 Batt or Blanket Mineral Fiber Insulation: ASTM C 665, Types and Classes as listed below. Insulation shall be rated non-combustible when tested in accordance with ASTM E 136.

.1 Flame Resistant Foil-Scrim-Kraft Faced Insulation: Type III, Class A.

.2 Foil Faced Insulation: Type III, Class B.

.3 Kraft Faced Insulation: Type II, Class C.

.4 Unfaced Insulation: Type I.

2.1.2 Rigid and Semi-Rigid Mineral Fiber Insulation:

.1 Foil Faced Rigid Mineral Fiber Boards: ASTM C 612, Class 1, 2.25 pounds per cubic foot maximum density with flame resistant foil-scrim-kraft facing.

.2 Neoprene Faced Acoustical Insulation: Minimum 2.0 pounds per cubic foot, black neoprene coated glass fiber duct liner complying with FS HH-I-545, Type II. The coated material shall have a flame spread rating not to exceed 25 and a smoke developed rating not to exceed 50 when tested in accordance with ASTM E 84. Provide duct liner without manufacturer's logo or other information printed on the exposed face.

2.1.3 Polystyrene Board: ASTM C 578, Type I or II.

2.1.4 Polyisocyanurate Board: FS HH-I-1972/1, Class 2.

2.1.5 Acoustic Exterior Sound Panel: Outdoor rated, non-fibrous sound absorbing panel; equal to Acoustical Solutions, Inc., “Polysorpt Indoor-Outdoor Sound Panel”, Class I Fire Rated; one inch thick wall panel; color – Charcoal.

2.2 AUXILIARY INSULATING MATERIALS:

2.2.1 Spindle Anchors:

.1 Zinc-coated steel consisting of a perforated base plate with a projecting split prong of appropriate type and length to penetrate the full thickness of the insulation and be bent back flush with the insulation surface.

.2 Provide one safety washer with each clip fastener.

.3 Adhesive shall be capable of bonding spindle anchors securely to substrates indicated without damaging or corroding either insulation, anchors, or substrates. Adhesive shall have a bonding strength of 70 pounds per clip after a 3-day drying time at 70 degrees F and shall have a temperature range of minus 20 degrees to plus 225 degrees F.

.4 Fasteners: Acceptable products or equal:

Stic-Klip Mfg. Co.; Type A or B
Miracle Adhesives Corp.; Miracle Stuk-Ups
Goodloe E. Moore; Gemco or Tuff-Weld

2.2.2 Metal Furring Strips: Z-shaped members of not lighter than 25 gage steel with inner flange not less than 1-3/8 inches wide knurled to accept drywall screws; or an insulation systems consisting of factory grooved polystyrene insulation boards with serrated U-shaped metal furring channels. Acceptable factory grooved polystyrene insulation and serrated U-shaped metal furring channels system or equal:

W. R. Grace and Co.; Thermo-Stud
Dow Chemical Co.; TGIF

2.2.3 Fasteners: Fasteners shall be pneumatically driven fasteners, powder actuated fasteners of concrete stub nails. Fasteners shall be of sufficient length to penetrate at least 1 inch into the masonry substrate.

2.2.4 Duct Tape: As recommended by the insulation manufacturer.

2.2.5 Wire Mesh: Wire mesh shall be hexagonal zinc-coated steel poultry netting having a 1-1/2 inch mesh size and 0.048 inch diameter (18 gage) wire, conforming to ASTM A 390.

2.2.6 Line Wires: Soft annealed steel with light zinc coated finish not lighter than 16 gage.

PART 3 - EXECUTION

3.1 INSTALLATION OF BATT INSULATION:

3.1.1 Install batt insulation in accordance with the manufacturer's recommendations. Install insulation the full height of the walls and between framing members as indicated.

3.1.2 Fully insulate all small areas between closely spaced framing members.

3.1.3 End match neatly with ends fitting snugly or overlapped.

3.1.4 Insulation shall be continuous behind all pipes, lighting switches, convenience outlet boxes, etc. Where pipes are installed in spaces to receive insulation, place insulation between exterior wall and the pipe, compressing insulation if necessary.

3.1.5 Kraft and Foil Faced Blankets: Where possible, recess foil faces 3/4 inch from face of framing members. Tape flanges to metal framing members. Maintain kraft or foil facings intact or patch all tears or holes using plastic tape or other approved means.

.1 Between Wood Framing Members: Where insulation is cut to fit small or irregular spaces, form flanges for attachment to framing members. Insert flanged blankets between framing members with facing toward the building interior. Staple flanges to wood framing members at the end of each blanket and not more than 6 inches apart between ends.

.2 Between Metal Framing Members: Size insulation to fit tightly between light gage metal framing. Where insulation is cut to fit small or irregular spaces, cut the insulation slightly larger than the space to ensure a tight friction fit. Insert blankets between the studs from the inside face of the wall, recessed slightly from the face of the studs. Where blankets are not adequately supported by friction, attach the blankets with tape, adhesive, 9/16 inch long divergent point staples located at four corners and center of each blanket, or tie wires spaced not more than 36 inches on center.

.3 To Concrete or Masonry Walls Deck: Cut insulation to cover walls. Apply adhesive to the wall and set clip fasteners in adhesive. Space fasteners as recommended by the insulation manufacturer. After curing of adhesive, install insulation over fasteners and bend the split prongs flush with the insulation to secure. Butt all edges of insulation and seal edges with tape.

.4 To Underside of Concrete or Metal Deck: Cut insulation to fit between structural steel framing and to completely cover underside of floor decks. Weld clip fastener to underside of metal deck. Apply adhesive to the underside of concrete deck and set clip fasteners in adhesive as recommended by the insulation manufacturer. Space fasteners in accordance with the insulation manufacturer's recommended pattern but not to exceed one fastener for each 4 square feet of insulation. After curing of adhesive, install insulation over fasteners and bend the split prongs flush with the insulation to secure. Butt all edges of insulation and seal edges with tape.

3.1.6 Unfaced Batts and Blankets: Where insulation is cut to fit small or irregular spaces, cut the insulation slightly larger than the space to ensure a tight friction fit. Insert blankets between the studs from the inside face of the wall, recessed slightly from the face of the studs. Where blankets are not adequately supported by friction, attach the blankets with adhesive, 9/16 inch long divergent point staples located at four corners and center of each blanket, or with tie wires spaced not more than 36 inches on center.

3.2 INSTALLATION OF SEMIRIGID INSULATION:

3.2.1 Install insulation blankets with minimum 1 inch space between face of insulation and the spandrel panels using the spindle anchors spaced 12 inches on center both ways.

3.2.2 Acoustical Insulation for Surface Application: Install insulation on surface of masonry walls and underside of concrete slab or metal deck with clip fasteners glued or welded to the substrate and spaced not more than 12 inches on center each way.

3.3 INSTALLATION OF RIGID INSULATION SYSTEM:

3.3.1 General: Install rigid insulation board of the thickness indicated by one of the following methods on interior side of exterior concrete and masonry walls where indicated.

3.3.2 Installation Using Z-Shaped Furring Channels: Erect insulation vertically and hold in place with Z-shaped furring channels spaced 24 inches on center. Except at exterior corners, attach narrow flanges of furring channels to the wall with concrete stub nails, power driven fasteners or pneumatically driven fasteners spaced 24 inches on center. At exterior corners, attach wide flange of furring channel to the wall with the short flange extending beyond the corner. Start from this furring channel with a 3 inch strip of insulation followed by a furring channel installed in the normal manner. At interior corners, place one channel at the corner with a second channel no more than 12 inches from the corner and cut insulation to fit. Hold insulation in place until gypsum board is installed using 10 inch staples field fabricated from 18 gage tie wire and inserted through a slot in the channel. Apply wood blocking around door and window openings and as required for support of fixtures and furnishings. Cut insulation boards as necessary to fit around windows, doors and electrical conduit.

3.3.3 Installation Using U-Shaped Furring Channels: Install the insulation board beginning at one corner with each board butted tightly to form an uninterrupted surface. Cut and fit the board as necessary to accommodate doors, windows and electrical conduit. Position the U-shaped channels in one of the pregrooved areas of the board beginning at the corner. Space studs not more than 24 inches on center. Press the back of the channel nearly flush with the face of the insulation board. Position additional channels around windows and door openings and at outside corners as necessary to provide firm attachment for the gypsum drywall. Drive hardened concrete nails or pneumatically driven fasteners through the channel and insulation board and not less than 1 inch into the substrate. Space fasteners not more than 24 inches on center.

3.4 INSTALLATION OF ACOUSTIC EXTERIOR SOUND PANEL:

3.4.1 Cut panels to required width per manufacturer's written instructions, and fit between 7/8 inch furring/hat channel.

3.4.2 Install panels directly to substrate.

3.4.3 Apply adhesive to back of panel at ¼ inch adhesive bead around perimeter and in overlapping "X" patterns as indicated in manufacturer's written instructions. Use fast-drying construction adhesive; Liquid Nails, PL 200 or equal.

3.4.4 Press panel into place using large surface area block to avoid creating small indentations in panel surface.

3.4.5 Mechanically fasten panel with screws and fender washers per manufacturer's written instructions for exterior, extreme heat installation requirements.

END OF SECTION

34-003 – 02/25/2014

SECTION 07520

ADHERED ROOFING SYSTEM

PART 1 – GENERAL

1.01 DESCRIPTION

A. Scope

Furnish and install a 45 mil KEE thermoplastic Roofing System.

Over clean,sound plywood deck:

1. Mechanically attach one layer of Hunter Panels 3.1" DWD Polyisocyanurate Insulation.
2. Mechanically attach ¼" densdeck panels as fireproofing on sloped perimeter plywood parapet walls.
3. Over Hunter Panels 3.1" Polyisocyanurate Insulation, & ¼" densdeck panels; mecahically attach KEE 45 mil. Membrane per manufacturer's recommendations.
4. Install fiber-tite walk pads from roof access to mechanical equipment in same layout as existing walk pads.
5. Roofing System will receive a 20-year NDL warranty.

B. Special Conditions

1. Manufacturer shall be wholly owned U.S. company. Subsidiaries, divisions or affliliations of foreign corporations is not allowed.
2. All products shall be produced in the United States.
3. Roofing membranes must comply with all product standards, properties and requirements as listed in this specification.
4. This specification is applicable to only those building roofs that have decking of sufficient structural integrity, capable of supporting a thermoplastic roof system according to the guidelines set forth herein and specific system addenda included by reference in Section 1.02.
5. All applications and projects specifications require review by Manufacturer's Technical Services for acceptance prior to any commitment to provide a commercial warranty.
6. Pre-job paperwork, as required by Manufacturer, must be completed, signed by an authorized roofing contractor, submitted to and approved by Manufacturer before any consideration for warranty and/or the release of any materials can be authorized.

C. Special Design Considerations

1. Moisture conditions in existing roof(s) which would prohibit the performance of a new roof system.
2. Coal tar recovers and/or direct contact with bituminous materials.
3. Positive slope to promote adequate drainage to avoid the potential damage to the substrate or components.
4. Roof areas subject to heavy or excessive mechanical traffic.

D. Environmental Considerations

1. Severe environmental exposure, e.g. coastal or high wind area(s).
2. Significant hail exposure
3. Chemical discharge.

4. Environmental conditions such as fog, dew, rain or snow and/or freezing temperatures can have a detrimental effect on the application and performance of adhesive.
5. Compliance with EPA and OSHA requirements as published by Local, State and Federal authorities.

1.02 ROOFING SYSTEMS REFERENCES

A. MA06 Addendum for Mechanically Attached Membranes

1.03 QUALITY ASSURANCE

A. Applicable Standards:

1. American Society for Testing and Materials (ASTM), standards as referenced herein.

2. Factory Mutual Engineering Corporation (FM)

   a. "Wind Force on Buildings and Other Structures" Loss Prevention Data Sheet 1-7,
   b. "Wind Loads to Roof Systems and Roof Deck Securement" Loss Prevention Data Sheet 1-28,
   c. "Roof Systems" Loss Prevention Data Sheet 1-28R/1-29R
   d. "Above Deck Roof Components" Loss Prevention Data Sheet 1-29
   e. "Perimeter Flashing" Loss Prevention Data Sheet 1-49

3. National Roofing Contractors Association (NRCA) Roofing and Waterproofing Manual, current edition.

4. Underwriter's Laboratories (UL)

   a. Building Materials Directory, 2006 Edition
   b. Fire Resistance Directory, 2006 Edition
   c. UL 214 Flame Test

B. KEE Roofing System shall be installed only by a *roofing contractor*, authorized by Manufacturer to install selected roofing System prior to bid.

C. Roofing contractor's key personnel shall have been trained by Manufacturer and shall be fluent in English.

D. The KEE Roofing Systems shall be installed in accordance with the most current guide specifications and details as amended and / or authorized by Manufacturer for specific project requirements.

E. There shall be no deviations from approved contract specifications or shop drawings without prior written approval by the owner/owner representative and FiberTite.

F. Unauthorized deviations may subject the roof system to warranty ineligibility and contractor liability for expense for remedy .

G. Work found to be substandard or in violation of the Contract Documents or Manufacturer 's Specifications shall be subject to rejection including complete removal and replacement with new materials at the expense of the Contractor.

H. Upon completion and certification by the Contractor that a quality installation has been completed in accordance with the approved contract specifications and all field welds have been probed and inspected, quality assurance inspection of the roof system shall be performed by Manufacturer for acceptance and approval of appropriate warranty. All field seams must be available for inspection. Final approval of the work performed shall be made by the owner's representative.

1.04 SUBMITTALS

A. The following information shall be submitted to Manufacturer for review before warranty consideration, material shipment or acceptance can be confirmed.

1. Complete copy of project architectural specifications or roofing contractor's proposal outlining design parameters.
2. Complete list of accessories or materials not manufactured or expressly authorized for use in Manufacturer's literature.

1.05 DELIVERY & STORAGE

A. Deliver all materials to the job site in manufacturer's original, unopened containers, with legible labels and in sufficient quantity to allow for continuity of work.

B. Select and operate material handling equipment in a safe manner, guarding against damage to existing construction or newly applied roofing and conforming to manufacturer's recommendations of handling and storage.

C. All rolls of membrane shall be stored, lying down, elevated above the roof deck and completely protected from moisture with tarpaulins. *(Manufacturer's packaging is not considered adequate for outdoor storage.)*

D. Insulation and cover board materials shall be elevated on pallets and fully protected from moisture with tarpaulins. (Manufacturer's packaging is not considered adequate protection from moisture.)

E. Adhesives and sealants shall be safely stored between 50° F and 80°F.

F. Flammable materials shall be stored in a cool, dry area away from sparks and open flames. Follow all precautions as outlined in manufacturer's Material Safety Data Sheets.

G. Materials, having been determined by the owner/owner's representative to be damaged, shall be immediately removed from the construction site and replaced at no cost to the owner.

1.06 JOB CONDITIONS

A. Safety

1. Take all necessary precautions regarding worker health and safety when using solvents, adhesives and hot asphalt.
2. Store flammable liquid and materials away from open sparks, flames and extreme heat.
3. Take necessary precautions when using solvents and adhesives near fresh air intakes.
4. Comply with all OSHA requirements for construction.
5. Daily site cleanup shall be performed to minimize debris and hazardous congestion.

B. Protection

1. Schedule installation sequence to limit access and utilization of the newly installed membrane for material storage, construction staging, mechanical and/or excessive foot traffic.

2. Provide proper protection on all newly completed roofing to avoid damage to the new roofing system.
3. Traffic should be minimized on a freshly laid roof.
4. Protect building walls, rooftop units, windows and other components during installation any damages to existing aforementioned will be replaced at the contractors expens.

C. Additional Precautions

1. Adverse weather conditions e.g. extreme temperature, high winds, high humidity and moisture, could have a detrimental effect on adhesives, general production efforts or the quality of the finished installation. Contact Manufacturer for recommendations and acceptable tolerances.
2. Daily production schedules of new roofing shall be limited to only that which can be made 100% watertight at the end of the day, including all flashing and night seals.
3. All surfaces to receive new roof system, including insulation and flashing, shall be free from all dirt, debris and be thoroughly dry.
4. Comply with local EPA requirements as published by Local, State and Federal authorities.
5. All construction debris shall be removed from the construction site and legally dispose of off site.
6. Contractor shall supply ans maintain at his own expense a portable toilet and hand washing station for his employees.

1.07 COORDINATION

A. Prior to installation of materials, a pre-roofing conference shall be held with the roofing contractor, and owner/owner's representative(s) to discuss the specified roofing system coordinate its proper application and the expectations of all parties involved. The authorized roofing contractor and the owner/owner's representative shall notify all parties a minimum of fourteen days prior to the meeting.

B. Plan and coordinate the installation of the roofing system with other trades in such a manner to avoid membrane damage, keeping the complete installation weather tight and in accordance with all approved details and warranty requirements.

C. FiberTite shall be available to make recommendations necessary to ensure compliance with project specifications and specification alternatives due to unforeseen job conditions.

D. Field services are provided at the discretion of FiberTite. A minimum two weeks notice is required to evaluate and coordinate any request for on site technical assistance.

1.08 WARRANTY

A. Inspections: Upon final acceptance by owner's representative a ***Manufacturer*** Technical Representative shall inspect the completed KEE roof installation, and upon acceptance, ***Manufacturer*** shall issue the pre-authorized warranty, subject to the terms and conditions of the sample warranty and contract documents. Warranty length shall be not exceed length of time material has actually been "IN SERVICE", in it's current membrane formulation on other installations in the United States.

B. Available Warranties-Manufacturer shall offer the following warranties:

1. ***20-NDL System Warranty*** provides the building owner protection against the cost of repairing leaks as a direct result of either defects in the membrane or the workmanship involved in it's installation beyond the Twenty years offered.

PART 2 - PRODUCTS

2.01 GENERAL

A. All products and components for the KEE Roofing System shall be supplied by Manufacturer

B. Components other than those manufactured and / or supplied by Manufacturer shall be submitted for review, prior to ordering. Any product(s) not specifically authorized in writing for the project by Manufacturer shall be considered unacceptable and their performance excluded from the warranty.

C. KEE membranes may be installed over or adhered directly to pre-approved insulation, cover board, decking or composites there of. Contact Manufacturer for additional information regarding compatible substrates.

2.02 MEMBRANE

A. 45-mil KEE Membrane: Nominal 45-mil ethylene interpolymer (EIP) membrane, reinforced with knitted polyester fabric manufactured in the United States, conforming to the physical properties as outlined in the associated data sheet. KEE membrane must meet the physical property requirements and the surface compound meets polymer content definitions as outlined in ASTM D 6754 - 02 Standard Specification for Ketone Ethylene Ester (KEE) Sheet Membranes.

45-mil KEE Membrane PHYSICAL PROPERTIES:

Thickness (nominal)	ASTM D-751	0.045 (1.1 mm)
Breaking Strength	ASTM D-751 Grab	375 x 350lbs (1.7 x 1.6 kN)
Tensile Strength	ASTM D-882	8500 psi (598 kgf/cm$_2$)
Tear Strength	ASTM D-751	100 lbs (445 N)
Dynamic Puncture	ASTM D-5635	20 joules
Low Temperature Flex	ASTM D-2136	30$_o$F (-34$_o$C)
Dimensional Stability	ASTM D-1204	< 1.0%
Seam Strength ASTM	D-751	100% of fabric strength
Coating Adhesion	ASTM D-751	Cannot initiate coating peel
Hydrostatic Resistance	ASTM D-751	650 psi (46 kgf/cm$_2$)
Oil Resistance	MIL-C-20696C	No swelling, cracking, leaking
Ozone Resistance	ASTM D-1149	No effect

B. Flashing Membrane: Nominal 45-mil non-reinforced KEE membrane shall be used for all flashing requirements to match the field membrane and warranty expectations selected for the roofing system. .

C. Acceptable substrate(s)

1. Authorized rigid insulation or cover board.
2. Structural Concrete, insulated or non-insulated.*
3. Insulated Steel Decking.
4. Existing smooth surfaced, bituminous roof or existing single ply roof membrane.*
5. Existing, aggregate surfaced, bituminous roof with authorized insulation or cover board.
6. Exterior grade plywood; insulated or non-insulated.*
7. Cementitious fiber or Gypsum, insulated or non-insulated.
8. Cellular, light weight insulating concrete.*
9. Authorized base sheet with an adhered insulation/cover board assembly.

*A slip sheet or separation layer is recommended. The “requirement” for including and/or the selection of an appropriate slip sheet will be determined by the system selected, surface texture of the substrate, environmental and/or fire classification requirements of the project roof assembly.

D. Acceptable Manufacturer:

1. FiberTite, a division of the Seaman Corporation.
2. Or Equal products by Tremco or Garland.
3. Equal products must be prior approved by the owner a minimum of 21 days prior to the bid date to insure quality consistency of proposed substitutions.

2.03 RELATED MATERIALS: The following product(s) / material(s) shall be supplied by Membrane Manufacturer.

A. Vertical Membrane Adhesives: Adhesives (Vertical Surfaces), supplied by ***Manufacturer*** have been specially formulated for KEE Roofing Systems. Application technique and coverage rates will vary according to substrate and environmental conditions. See Table 1 for average coverage rates on common substrates.

1. FTR-190 Adhessive: A solvent base, contact (two sided) bonding adhesive, designed for bonding non-fleece back KEEe membranes to properly prepared and pre-authorized horizontal and vertical substrates.

Table 1: *Adhesive rates for common substrates.*

Membrane: 45-mil Vertical Flashing Adhesive KEE membranes
Adhesive: Solvent FTR 190 Bonding Adhesive

Surface/ Substrate	Application Rate
Back side of Membrane	1.0 gal/100 ft²
Polyisocyanurate Insulation	1.2 gal/100 ft²
Gypsum Core Cover boards	1.2 to 1.5 gal/100 ft²
Masonry	1.2 gal/100 ft²
Wood	1.0 gal/100 ft²

B. Sealant: A one-component gun-grade polyurethane sealant to seal flashing termination.

C. Pitch Pan Sealant: A one component pour able, self leveling, polyurethane sealant to fill "pitch pans".

D. KEE Clad Metal: To fabricate metal flashing, 4' x 10' sheets of 24 gauge hot dipped G-90 steel, or 0.040 thick 3003H14 aluminum, laminated with a 0.020 mil polymeric coating.

E. Pre-Molded Flashing(s): Injection molded vent stack and inside/outside corner flashing using KEE/EIP compound.

F. KEE Non-Reinforced Membrane: Field fabrication membrane, 0.060 mil non-reinforced EIP membrane.

G. Walk Way & Protection Pads: High grade walk way / protection material with "slip resistant" design using KEE compound.

H. Fasteners

1. Membrane Fasteners: To secure KEE membrane to steel, wood and structural concrete decks. A #15-13, buttress threaded, #3 Phillips head fastener constructed of case hardened carbon steel with a reduced diameter drill point and Sentri XP corrosion resistant coating.
2. Insulation Fasteners: To secure insulation to steel, wood and structural concrete decks. A #14-13, heavy duty threaded steel #3 Phillips truss, self tapping corrosion resistant fastener.
3. Concrete Membrane Fastener: TapGrip: To secure insulation and membrane(s) to structural concrete decks, masonry block and brick. Hard carbon steel, threaded fastener for attachment using a 3/16 inch pilot hole.
4. Concrete Insulation Fastener: NTB-1H: To secure insulation, base sheet and /or membrane to gypsum and cementitious fiber decks. Threaded, glass-filled nylon fastener, with locking wire barbs.
5. Peel Rivets: To secure insulation, base sheet and /or membrane to steel, wood, cement fiber, tectum, fiberglass and lightweight plank decks. Thread less, high magnesium aluminum alloy fastener.
6. BS Fasteners: Coated fastener and stress plate to secure base sheet to gypsum and cellular lightweight insulating concrete decks.
7. Purlin Fasteners: To secure FiberTite membrane to the existing metal roofing systems structural members.

I. Barbed Stress Plates: Used to anchor membrane, are 2.5 inch x 1.5 inch rectangular in dimension with 0.75 inch radial corners, manufactured from 18 gauge AZ-50 galvalume steel with a 0.250 inch diameter hole in its center. The plate has a raised reinforcement area and eight "barbs". OR Used to anchor membrane, are 2.375 inch round steel plate manufactured from 20 gauge galvalume steel with a 0.250 inch diameter hole in its center. The plate has a raised reinforcement area and "barbs".

J. Sand Dollar Insulation Stress Plates: Used to secure insulation to steel, wood and structural concrete decking. Manufactured from high density polyethylene, 3 inch in diameter, designed with a self locking mechanism to secure the head of the insulation fasteners into the plate.

K. Termination Bar: Membrane flashing(s) restraint / termination seals, nominal 1/8 inch x 1 inch x 10' 6060-T5 extruded aluminum bar with pre-punched slots, 8 inch on center.

L. Metal Fascia System: Two piece "snap-on" pre-formed, metal edge system.

M. Insulation: ***Hunter Panels 3.1" DWD Polisocyanurate Insulation providing Class A Roofing assembly***.

2.04 RELATED MATERIALS

A. Wood Nailers: Wood Nailers are being tested to determine the effect preservatives on metal components. Borate treated lumber seem to be the less corrosive and is strongly recommended. Installation of other types of treated lumber should be verified with a design professional.

1. Wood shall be No. 2 or better construction grade lumber. *Creosote or asphaltic type preservatives are not acceptable.*
2. Minimum top nailer thickness shall be 1.5 inch nominal.

B. Insulation

a. Hunter Panels 3.1" DWD Polisocyanurate Insulation providing Class A Roofing assembly.

NOTE: *For the purpose of this guide specification, unless explicitly defined otherwise, the term insulation is used interchangeably to refer to rigid insulation materials, tapered or flat, cover board, thermal barriers and or multilayered composites.*

1. Insulation shall be installed, where specified and/or required to provide a suitable surface for the Manufacturer Roofing System and/or meet desired thermal values.
2. Acceptable products must be pre-approved in writing by Manufacturer and comply with the following minimal characteristics and classification(s).
3. Pre-Approved Products
   b. Hunter Panels 3.1" Polisocyanurate Insulation providing Class A Roofing assembly.
      i. FM approved meeting Class A 1-90, for fire and wind.
      ii. UL Classification: Class A Assembly.
      iii. Meet requirements of ASTM C 473
4. If requested, the manufacturer shall provide to the building owner, a written statement, with a copy to Manufacturer that specifically expresses warranty conditions for the successful installation and performance of their insulation.

3.00 EXECUTION

3.01 GENERAL

A. The "Authorized" roofing contractor is responsible for ensuring appropriate system specific addendums included by reference are strictly applied to GS06; General Guide Specifications for Installation of Manufacturer Roofing Systems.

B. The roofing contractor is responsible for providing a suitable substrate surface for the proper installation of the KEE Roofing System, roof insulation and specified components.

C. Application of KEE materials constitutes an agreement that the roofing contractor has inspected and found the substrate suitable for the installation of the KEE Roofing System.

D. The roofing contractor is responsible for coordinating the installation to ensure that the system remains watertight at the end of each working day

3.02 SUBSTRATE PREPARATION

A. The roofing contractor is responsible for verifying that the deck condition and/or existing roof construction is suitable for the specified installation of the KEE Roofing System.

B. The KEE Roofing System Manufacturer requires fastener withdrawal values (pull out tests) on all re-roofing projects to verify the suitability of decking to accept a mechanically fastened insulation and/or membrane roofing system.

C. Examine surfaces for inadequate anchorage, low areas that will not drain properly, foreign material, ice, wet insulation, unevenness or any other defect which would prevent the proper execution and quality application of the KEE Roofing System as specified.

D. Prepared substrate shall be smooth, dry, and free of debris and/or any other irregularities which would interfere with the proper installation of the KEE Roofing System.

E. Do not proceed with any part of the application until all defects and preparation work have been corrected and complete.

3.03 SUBSTRATE PREPARATION

A. Wood

1. Wood decking that is less than 3/4 inch will be considered for application by Manufacturer. Fastener withdrawal tests shall be performed on all "Non-FM Approved" wood decking (wood plank less than 2 inches thick or plywood less than 3/4 inch thick) to determine suitability and appropriate fastener patterns for the components of the new KEE Roofing System.
2. Wood decking shall be sound, no dry rot, well seasoned or kiln dried and of proper thickness to accommodate design loads (including wind up-lift) according to specified design criteria and/or local building code requirements.
3. Wood decking should provide positive slope and subsequent positive drainage of the new KEE Roofing System.
4. All exposed wood trim shall be painted by owner unless otherwise directed during pre-roof walk.

3.05 WOOD NAILERS

A. Install treated lumber at the same heights as insulation layer or adjacent construction ± 1/4 inch Continuous treated wood nailers are to be installed at all perimeters, around roof projections and penetrations as shown in approved details. In re-cover applications, the surface under the wood nailers shall be FREE OF ALL GRAVEL and shall be as even as possible.

B. Where wood nailers are installed directly on the substrate, the substrate shall be carefully examined to confirm that the entire area provides a suitable fastening surface. All defects shall be repaired by the appropriate trade prior to installation.

C. Nailers shall be at least 3½ inch wide and 1.5 inch high and installed and anchored in such a manner to resist a force of 250 lbs. per linear foot of wood blocking in any direction.

D. Nailers along parapets, curbs and expansion joints are recommended for insulated decking. Consult Manufacturer Technical Customer Services for optional / alternate membrane termination / securement methods.

3.07 ROOF INSULATION

A. General

1. Roof insulation shall be installed where by the long dimension of the board(s) run in parallel alignment and the short dimensions are staggered.
2. Insulation shall be installed with minimum joint dimensions and shall be tightly butted where possible. Maximum joint widths shall be 3/8 inch. Damaged corners shall be cut out and replaced with an insulation piece a minimum of 12 inch x 12 inch Pieces which are cut from larger panels and are smaller than one square foot are not acceptable.
3. Install no more than can be covered during the same working day.
4. Taper roof insulation to drain sumps using tapered edge strips. If an insulation layer is 1-1/2 inch or less, taper 12 inch from the drain bowl. If insulation thickness exceeds 1-1/2 inch, taper 18 inch from the drain bowl. All taper boards or pieces must be adhered or mechanically fastened with a minimum of two fasteners per board.
5. When a cover board and/or multiple layers are installed each layer should be offset from the previous layer a minimum of 12 inch on center.
6. At the end of each working day, provide a watertight cover on all unused insulation as to avoid moisture penetration.

3.08 INSTALLATION OF KEE MEMBRANE(s)

A. Quality Control

1. It will be the responsibility of the roofing contractor to initiate and maintain a QC program to govern all aspects of the installation of the KEE Roofing System
2. The project foreman and or supervisor will be responsible for the daily execution of the QC program which will include but is not limited to the supervision, inspection and probing of all heat welding incorporated within the KEE Roofing System
3. If inconsistencies in the quality of the application of the composite, membrane and/or welds are found, all work shall cease until corrective actions are taken to ensure the continuity the installation.

B. General

1. Work shall be coordinated to ensure that sequencing of the installation promotes a 100% watertight installation at the end of each day.
2. All KEE Roofing Systems or sections shall be designed utilizing and determined to be in compliance with the procedures outlined within the current publication of ASCE Standard 7. Alternative designs may be determined using the criteria within Factory Mutual Research Loss Prevention Data.
3. A KEE Roofing System may utilize either conventional "roll goods" or pre-fabricated custom rolls or a combination of both. Custom Rolls must be utilized for ballast and metal recover applications. *(Custom rolls of variable width and length are available upon request.Consult with FiberTite.)*
4. Restrictions regarding outside ambient air temperature are relative only to the exposure limits of the workers and/or adhesives.
5. When using adhesives outside ambient air temperature should be above 40°. Curing or drying time of the adhesive will be affected by ambient temperatures and must be taken into consideration when determining flashing lengths.
6. KEE Roofing System shall only be installed over properly prepared and sound substrates, free from excessive surface roughness, dirt, debris and moisture.

C. Mechanically Attached KEE Roofing Systems

1. Addendum MA06 is included in this specification and considered a governing guide and supplement by reference for the installation of mechanically fastened 45 mil KEE membrane roofing systems.

D. Peel Stops

1. Addendum AD06 is included in this specification and considered a governing guide and supplement by reference for the installation of 45 mil KEE membrane roofing systems.

E. Hot Air Welding

1. General
   a. All field seams exceeding 10 feet in length shall be welded with an approved automatic welder.
   b. All field seams must be clean and dry prior to initiating any field welding.
   c. Remove foreign materials from the seams (dirt, oils, etc.) with Acetone or authorized alternative. Use CLEAN WHITE COTTON cloths and allow approximately five minutes for solvents to dissipate before initiating the automatic welder. ***Do not use denim or synthetic rags for cleaning***.
   d. All welding shall be performed only by qualified personnel to ensure the quality and continuity of the weld.
   e. Contaminated areas within a seam will inhibit proper welding and will require a membrane patch
2. Hand Welding
   a. The lap or seam area of the membrane should be intermittently tack welded to hold the membrane in place.
   b. The back "interior" edge of the membrane shall be welded first, with a thin, continuous weld to concentrate heat along the exterior edge of the lap during the final welding pass.

c. The nozzle of the hand held hot air welder shall be inserted into the lap at a 45° angle to the lap. Once the polymer on the material begins to flow, a hand roller shall be use to apply pressure at a right angle to the tip of the hand welder. Properly welded seams shall utilize a 1-1/2 inch wide nozzle, to create a homogeneous weld, a minimum of 1-1/2 inches in width.
d. Smaller nozzles may be used for corners, and other field detailing, maintaining a minimum 1 inch weld.

3. Automatic Machine Welding
   a. Proper welding of the KEE Membrane can be achieved with a variety of automatic welding equipment. Contact KEE Manufacturer for specific recommendations.
   b. Follow all manufacturers' instructions for the safe operation of the automatic welder.
   c. Follow local code requirements for electric supply, grounding and surge protection.
   d. The use of a dedicated, portable generator is highly recommended to ensure a consistent electrical supply, without fluctuations that can interfere with weld consistency.
   e. Properly welded seams shall utilize a 1-1/2 inch wide nozzle, to create a homogeneous weld, a minimum of 1-1/2 inches in width.

F. Inspection
1. The job foreman and/or supervisor shall initiate daily inspections of all completed work which shall include, but is not limited to the probing of all field welding with a dull pointed instrument to assure the quality of the application and ensure that any equipment or operator deficiencies are immediately resolved.
2. Ensure that all aspects of the installation (sheet layout, attachment, welding, flashing details, etc.) are in strict accordance with the most current KEE Roofing Systems Specifications and Details.
3. Excessive patching of field seams because of inexperienced or poor workmanship will not be accepted at time of FINAL INSPECTION FOR WARRANTY ACCEPTANCE.
4. Any deviation from pre-approved specifications and/or details requires written authorization from the Manufacturer prior to application to avoid any warranty disqualification.
5. It is the contractor, job foreman, and supervisor and owners representative to perform a final "self" inspection on all seams prior to requesting the inspection for warranty issuance by the Manufacturer.

3.09 FLASHING

A. Clean all vents, pipes, conduits, tubes, walls, and stacks to bare metal. All protrusions must be properly secured to the roof deck with approved fasteners. Remove and discard all lead, pipes and drain flashing. Flash all penetrations according to approved details.

B. Remove all loose and / or deteriorated cant strips and flashing.

C. Flash all curbs, parapets and interior walls in strict accordance with approved Manufacturer details.

D. All flashing shall be adhered to properly prepared, approved substrate(s) with proper Adhesive or mastic applied in sufficient quantity to ensure total adhesion. Specific projects may require the use of FTR-190 Adhesive as a bonding adhesive for KEE membrane. Contact Manufacturer prior to this application.

E. The base flange of all membrane flashing shall extend out on to the plane of the deck, beyond the wood nailers to a maximum width of 8 inches.

F. Vertical flashing shall be terminated no less than 8 inch above the plane of the deck with approved termination bar and counter-flashing or metal cap flashing.

G. When using adhesive, vertical wall flashing termination shall not exceed 30 inches without supplemental mechanical attachment of the flashing between the deck and the termination point of the flashing.

H. Complete all inside and outside corner flashing details with Manufacturer supplied pre-formed corners or an approved field fabrication detail.

I. Probe all seams with a dull, pointed probe to ensure the weld has created a homogeneous bond.

J. Install penetration accessories in strict accordance with approved details. Ensure penetration accessories have not impeded in any way the working specification. (Refer to the related trade for the technical specification).

3.10 METAL FLASHING

A. All perimeter edge details are to be fabricated from KEE Clad Metal Min. 24 gauge or utilize a prefabricated Fascia System with a Kynar finish.

B. Ensure all fascia extend a minimum of 2 inch lower than the bottom of the wood nailers.

C. Fasten all metal flashing to wood nailers or approved substrate with approved fasteners 8 inches on center.

D. Break and install FiberClad metal in accordance with approved details, ensuring proper attachment, maintaining 1/2 inch expansion joints and the installation of a minimum 2 inch bond breaker tape prior to sealing the joint.

E. Solidly weld KEE Clad metal expansion joints with a 6 inch strip of KEE membrane welded to the KEE Clad metal, covering the bond breaker tape (cover plates are optional).

F. Roof Drains (contractor shall replace all existing drains with new cast iron drains)

1. Flash all roof drains in accordance with roof drain details.
2. Replace all drain bolts and bolts used to hold the drain compression ring to the drain bowl.
3. KEE non-reinforced 60 mil membrane shall be used for flashing the drain assembly. All drain assemblies shall be "sumped" and must be free of any asphalt or coal tar pitch residue prior to installation.
4. The drain target sheet should be sized and installed to provide for a minimum of 12 inch of exposed 60 mil on all sides of the drain.

3.11 SEALANTS

A. Apply authorized sealant(s) to all surface mounted reglets and per project requirements. Sealant(s) are to shed water. Follow all manufacturer's instructions and installation guides.

B. Use primer when recommended by the manufacturer.

C. Sealants will require periodic maintenance by the building owner’s maintenance personnel.

3.12 TEMPORARY SEALS

A. At the end of each working day or at the sign of rain, install temporary, 100% watertight seal(s) where the completed new roofing adjoins the uncovered deck or existing roof surface.

B. The authorized roofing contractor shall create and maintain the temporary seal in such a manner to prevent water from traveling beneath the new and / or existing roof system.

C. The use of plastic roofing cement is permissible when sealing to an existing built up roof.

D. If water is allowed to enter beneath the newly completed roofing, the affected area(s) shall be removed and replaced at no additional expense to the building owner.

E. Prior to the commencement of work, cut out and remove all contaminated membrane, insulation, roof cement or sealant and properly dispose off site.

3.13 WALKWAYS (Will be noted on Job-Walk)

A. Walkways and protection pads shall be installed at staging areas for roof top equipment maintenance or areas subject to regular foot traffic, (contractor shall use) existing layout as pattern for new walkpad installation.

B. Walkway Installation

1. Roofing membrane to receive walkway material shall be clean and dry.
2. Cut and position the walkway material as directed by the specifications or agreement.
3. Hot air weld the entire perimeter of the walk way to the previously cleaned KEE roofing membrane. Avoid excessive heating of the walk way material to prevent scorching the underlying roofing membrane.

C. Protection Pad Installation

1. Roofing membrane to receive protection pad material shall be clean and dry.
2. Prior to installing the protection pads (1/4 inch x 2' x 4'), weld a 6 inch x 6 inch strip of KEE membrane to each of the four corners of the back side of the pad. Position the strips in such a way that they overhang the edge of the pad a minimum of two inches around the 90° corner.
3. Position the protection pads as directed by the specifications or agreement and weld the visible portion of the previously applied stripping to the KEE roofing membrane.

3.15 COMPLETION

A. Remove any and all debris, excess materials and scrap of any kind from the roof and surrounding premises prior to demobilization.

B. Inspect all field welds, detailing and terminations to ensure a 100% the watertight installation.

3.16 WARRANTY INSPECTION

A. Upon completion of the project, the authorized roofing contractor shall complete and submit the Project Completion Notice to KEE Roofing Systems Manufacturer..

B. Upon receipt of the notice of completion, a Manufacturer Technical representative will schedule an inspection with a representative of the authorized roofing contractor to thoroughly review the installation and verify compliance with Manufacturer specifications.

C. Any corrections or modifications necessary for compliance with the specifications and acceptance for warranty *(punch list)* will be noted on the Final Inspection for Warranty Form.

D. Upon completion of all punch list items and final acceptance of the installation, a warranty as authorized by the KEE Roofing Systems Manufacturer will be issued.

END of SECTION FTRGS06

ADDENDUM-MA06
Addendum for Mechanically Attached FiberTite KEE Roofing Systems

MA06 is a "system specific" addendum to base specification for the design and installation of a quality high performance Mechanically Attached FiberTite KEE Roofing System. MA06 is not a stand alone guide specification and must be applied in concert with base specification.

PART 1 – GENERAL

A. General Guide Specification for Installation of KEE Roofing Systems are incorporated and considered inclusive herein and are to be followed without variation.

PART 2 – PRODUCTS

Refer to Base Specification

PART 3 – EXECUTION

Refer to Base Specification in addition to the following Sections.

3.07 ROOF INSULATION (Over Plywood Deck… HUNTER BOARD)

B. Preliminary Attachment of Insulation for Mechanically Attached Roofing Systems

1. Insulation shall be applied to or installed over properly prepared and pre-approved substrates, free of any debris, dirt, grease, oil or moisture.
2. All fasteners and stress plates for the mechanical attachment of insulation and / or cover board materials shall be Insulation Fasteners as provided by KEE Roofing System Manufacturer.
3. All fasteners and stress plates shall be Factory Mutual Research approved for mechanical attachment of insulation and comply with FM Standard 4470 for corrosion resistance.
4. General 1-90 attachment criteria require preliminary attachment for insulation and cover boards for mechanically attached membrane roofing systems. Insulation/cover board within the **FIELD** of the roof requires 6 fasteners and stress plates per 4' x 8' insulation board.
   a. **Perimeter** areas do not require an increase in the fastener density when the membrane is mechanically attached.
   b. **Corner** areas do not require an increase in the fastener density when the membrane is mechanically attached.
5. Fasteners shall be installed straight, tight and perpendicular to the decking complying with minimum penetration requirements of specific deck types. Do not over torque fasteners.
6. Fasteners shall be installed using depth sensing tool attachments to ensure proper installation.
7. Standing Seam Metal retrofit applications require that the base layer of insulation is loose laid between the raised metal roof profiles, matching their height to level the metal roof profile and support the top layer of insulation / cover board.
   a. Lay the "fill" insulation with the long dimension of the insulation in parallel alignment to and between the raised metal profiles.
   b. Install top layer of insulation or cover board perpendicular to the raised metal profiles.
8. Attach the top layer of Insulation/cover board using 6 fasteners and "locking" stress plates per 4' x 8' insulation board.
9. It may be possible to utilize adhesives for the preliminary attachment of the insulation layer(s) on **non-steel** deck projects. The insulation/cover board manufacturer must recommend and approve the specific board and adhesive combination in writing prior to Manufacturer granting approval for this method of preliminary securement.

3.08 INSTALLATION OF KEE MEMBRANE

A. 45-mil mil KEE Membrane Mechanically Attached (Class 1 Decks)

1. Rolls of 45 mil KEE roofing membrane are to be positioned and installed straight and snug but not taut. Stretching of the membrane places undue stress on the mechanical fasteners.
2. If using custom fabricated rolls, align the paneled rolls to stager the factory seams to prevent adjacent welds from falling on top of one another. Adjoining rolls shall overlap five inches and be properly shingled with the flow of water where possible. It is not uncommon and is acceptable for the factory laps to "buck" water.
3. The properly positioned membrane shall be attached using Membrane Fasteners and Stress Plates installed through the membrane and insulation assembly and engage the structural decking.
4. The Stress plates shall be installed straight and parallel to existing structural purlin members. All stress plates must set completely on the membrane allowing a minimum of 1/2 inch from the edge and allow sufficient room to facilitate welding.
5. Fastener row spacing and intervals shall be established to resist design pressures, determined in compliance with procedures outlined within the current publication of ASCE Standard 7. Alternative designs may be determined using the criteria within Factory Mutual Research Loss Prevention Data.
6. Table MA06 lists "general" default attachment requirements for the field of the roof, as applied to structural roof decks generally referred to as Class 1; minimum ¾-inch plywood, minimum 22 gauge steel or minimum 3,000 psi concrete.
7. Perimeter zone and corner zone enhancement is required on all mechanically fastened roofing systems. Perimeters and corners are defined as follows:
   a. Perimeter: 10% of the width of the roof areas or 40% of the height of the roof area, which ever is less to a minimum of 4-ft. Perimeter zones run parallel to all external roof edges including those with parapet walls.
   b. Corner zones are the square intersection of perimeters.
   c. Projects having variable roof levels shall treat the outer boundary of each level as a perimeter. Internal expansion joints, firewalls or adjoining building walls greater than 4 feet are not considered perimeter areas.
8. Perimeters and corners may be enhanced by:
   a. Installing "half" rolls of membrane fastened as prescribed by project requirements.
   b. Adding additional rows of fasteners through the top of the membrane system within the perimeter at prescribed intervals area and sealing with a 6 inch strip

Individual project, insurance and building code requirements can vary substantially. Consult with KEE Roofing System Manufacturer to see if design assistance and evaluation for determining acceptable fastener patters is available.

TABLE MA06 - 1

Design Pressure	Lap Structure	Lap Fastening
≤ -30 psf / FM1-60	51" on center	24" on center
	69" on center	12" on center
≤ –45 psf / FM1-90	51" on center	18" on center
	69" on center	12" on center

≤ –60 psf / FM1-120	51” on center	12” on center
	69” on center	6” on center
≤ –67.5 psf / FM1-135	51” on center	6” on center

END OF ADDENDUM MA06

SECTION 07550

BALLAST ROOFING SYSTEM

PART 1 – GENERAL

1.01 DESCRIPTION

A. Scope

Furnish and install a 45 mil KEE thermoplastic Roofing System.

Over clean,sound plywood deck:

.

1. Mechanically attach ½" USG Securerock Glassmat panels as fireproofing over steel deck .
2. Mechanically attaché a 45 mil KEE single ply roof over the ½" USG Securerock Glassmat panels and steel deck.
3. At the lower roof areas a Polyquard Polyflow 18P drainage mat shall be loose laid over the KEE mambrnae. A layer of ballast pavers as specified by the architect shall then be installed over the drainage mat.
4. Install fiber-tite walk pads from roof access to mechanical equipment in same layout as existing walk pads.
5. Roofing System will receive a 20-year NDL warranty.

B. Related Documents: The Conditions of the Contract and Division 1 apply to this Section as fully as if repeated herein.

C. Related Sections: Rock Staining is Specified in Section 04905.

D. Special Conditions

1. Manufacturer shall be wholly owned U.S. company. Subsidiaries, divisions or affliliations of foreign corporations is not allowed.
2. All products shall be produced in the United States.
3. Roofing membranes must comply with all product standards, properties and requirements as listed in this specification.
4. This specification is applicable to only those building roofs that have decking of sufficient structural integrity, capable of supporting a thermoplastic roof system according to the guidelines set forth herein and specific system addenda included by reference in Section 1.02.
5. All applications and projects specifications require review by Manufacturer's Technical Services for acceptance prior to any commitment to provide a commercial warranty.
6. Pre-job paperwork, as required by Manufacturer, must be completed, signed by an authorized roofing contractor, submitted to and approved by Manufacturer before any consideration for warranty and/or the release of any materials can be authorized.

E. Special Design Considerations

1. Moisture conditions in existing roof(s) which would prohibit the performance of a new roof system.
2. Coal tar recovers and/or direct contact with bituminous materials.
3. Positive slope to promote adequate drainage to avoid the potential damage to the substrate or components.
4. Roof areas subject to heavy or excessive mechanical traffic.

F. Environmental Considerations

1. Severe environmental exposure, e.g. coastal or high wind area(s).
2. Significant hail exposure
3. Chemical discharge.
4. Environmental conditions such as fog, dew, rain or snow and/or freezing temperatures can have a detrimental effect on the application and performance of adhesive.
5. Compliance with EPA and OSHA requirements as published by Local, State and Federal authorities.

1.02 ROOFING SYSTEMS REFERENCES

A. MA06 Addendum for Mechanically Attached Membranes

1.03 QUALITY ASSURANCE

A. Applicable Standards:

1. American Society for Testing and Materials (ASTM), standards as referenced herein.

2. Factory Mutual Engineering Corporation (FM)

    a. "Wind Force on Buildings and Other Structures" Loss Prevention Data Sheet 1-7,
    b. "Wind Loads to Roof Systems and Roof Deck Securement" Loss Prevention Data Sheet 1-28,
    c. "Roof Systems" Loss Prevention Data Sheet 1-28R/1-29R
    d. "Above Deck Roof Components" Loss Prevention Data Sheet 1-29
    e. "Perimeter Flashing" Loss Prevention Data Sheet 1-49

3. National Roofing Contractors Association (NRCA) Roofing and Waterproofing Manual, current edition.

4. Underwriter's Laboratories (UL)

    a. Building Materials Directory, 2006 Edition
    b. Fire Resistance Directory, 2006 Edition
    c. UL 214 Flame Test

B. KEE Roofing System shall be installed only by a *roofing contractor*, authorized by Manufacturer to install selected roofing System prior to bid.

C. Roofing contractor's key personnel shall have been trained by Manufacturer and shall be fluent in English.

D. The KEE Roofing Systems shall be installed in accordance with the most current guide specifications and details as amended and / or authorized by Manufacturer for specific project requirements.

E. There shall be no deviations from approved contract specifications or shop drawings without prior written approval by the owner/owner representative and FiberTite.

F. Unauthorized deviations may subject the roof system to warranty ineligibility and contractor liability for expense for remedy .

G. Work found to be substandard or in violation of the Contract Documents or Manufacturer 's Specifications shall be subject to rejection including complete removal and replacement with new materials at the expense of the Contractor.

H. Upon completion and certification by the Contractor that a quality installation has been completed in accordance with the approved contract specifications and all field welds have been probed and inspected, quality assurance inspection of the roof system shall be performed by Manufacturer for acceptance and approval of appropriate warranty. All field seams must be available for inspection. Final approval of the work performed shall be made by the owner's representative.

1.04 SUBMITTALS

A. The following information shall be submitted to Manufacturer for review before warranty consideration, material shipment or acceptance can be confirmed.

1. Complete copy of project architectural specifications or roofing contractor's proposal outlining design parameters.
2. Complete list of accessories or materials not manufactured or expressly authorized for use in Manufacturer's literature.

1.05 DELIVERY & STORAGE

A. Deliver all materials to the job site in manufacturer's original, unopened containers, with legible labels and in sufficient quantity to allow for continuity of work.

B. Select and operate material handling equipment in a safe manner, guarding against damage to existing construction or newly applied roofing and conforming to manufacturer's recommendations of handling and storage.

C. All rolls of membrane shall be stored, lying down, elevated above the roof deck and completely protected from moisture with tarpaulins. *(Manufacturer's packaging is not considered adequate for outdoor storage.)*

D. Insulation and cover board materials shall be elevated on pallets and fully protected from moisture with tarpaulins. (Manufacturer's packaging is not considered adequate protection from moisture.)

E. Adhesives and sealants shall be safely stored between 50° F and 80°F.

F. Flammable materials shall be stored in a cool, dry area away from sparks and open flames. Follow all precautions as outlined in manufacturer's Material Safety Data Sheets.

G. Materials, having been determined by the owner/owner's representative to be damaged, shall be immediately removed from the construction site and replaced at no cost to the owner.

1.06 JOB CONDITIONS

A. Safety

1. Take all necessary precautions regarding worker health and safety when using solvents, adhesives and hot asphalt.
2. Store flammable liquid and materials away from open sparks, flames and extreme heat.
3. Take necessary precautions when using solvents and adhesives near fresh air intakes.
4. Comply with all OSHA requirements for construction.
5. Daily site cleanup shall be performed to minimize debris and hazardous congestion.

B. Protection

1. Schedule installation sequence to limit access and utilization of the newly installed membrane for material storage, construction staging, mechanical and/or excessive foot traffic.
2. Provide proper protection on all newly completed roofing to avoid damage to the new roofing system.
3. Traffic should be minimized on a freshly laid roof.
4. Protect building walls, rooftop units, windows and other components during installation any damages to existing aforementioned will be replaced at the contractors expens.

C. Additional Precautions

1. Adverse weather conditions e.g. extreme temperature, high winds, high humidity and moisture, could have a detrimental effect on adhesives, general production efforts or the quality of the finished installation. Contact Manufacturer for recommendations and acceptable tolerances.
2. Daily production schedules of new roofing shall be limited to only that which can be made 100% watertight at the end of the day, including all flashing and night seals.
3. All surfaces to receive new roof system, including insulation and flashing, shall be free from all dirt, debris and be thoroughly dry.
4. Comply with local EPA requirements as published by Local, State and Federal authorities.
5. All construction debris shall be removed from the construction site and legally dispose of off site.
6. Contractor shall supply ans maintain at his own expense a portable toilet and hand washing station for his employees.

1.07 COORDINATION

A. Prior to installation of materials, a pre-roofing conference shall be held with the roofing contractor, and owner/owner's representative(s) to discuss the specified roofing system coordinate its proper application and the expectations of all parties involved. The authorized roofing contractor and the owner/owner's representative shall notify all parties a minimum of fourteen days prior to the meeting.

B. Plan and coordinate the installation of the roofing system with other trades in such a manner to avoid membrane damage, keeping the complete installation weather tight and in accordance with all approved details and warranty requirements.

C. FiberTite shall be available to make recommendations necessary to ensure compliance with project specifications and specification alternatives due to unforeseen job conditions.

D. Field services are provided at the discretion of FiberTite. A minimum two weeks notice is required to evaluate and coordinate any request for on site technical assistance.

1.08 WARRANTY

A. Inspections: Upon final acceptance by owner's representative a ***Manufacturer*** Technical Representative shall inspect the completed KEE roof installation, and upon acceptance, ***Manufacturer*** shall issue the pre-authorized warranty, subject to the terms and conditions of the sample warranty and contract documents. Warranty length shall be not exceed length of time material has actually been "IN SERVICE", in it's current membrane formulation on other installations in the United States.

B. Available Warranties-Manufacturer shall offer the following warranties:

1. ***20-NDL System Warranty*** provides the building owner protection against the cost of repairing leaks as a direct result of either defects in the membrane or the workmanship involved in it's installation beyond the Twenty years offered.

PART 2 - PRODUCTS

2.01 GENERAL

A. All products and components for the KEE Roofing System shall be supplied by Manufacturer

B. Components other than those manufactured and / or supplied by Manufacturer shall be submitted for review, prior to ordering. Any product(s) not specifically authorized in writing for the project by Manufacturer shall be considered unacceptable and their performance excluded from the warranty.

C. KEE membranes may be installed over or adhered directly to pre-approved insulation, cover board, decking or composites there of. Contact Manufacturer for additional information regarding compatible substrates.

2.02 MEMBRANE

A. 45-mil KEE Membrane: Nominal 45-mil ethylene interpolymer (EIP) membrane, reinforced with knitted polyester fabric manufactured in the United States, conforming to the physical properties as outlined in the associated data sheet. KEE membrane must meet the physical property requirements and the surface compound meets polymer content definitions as outlined in ASTM D 6754 - 02 Standard Specification for Ketone Ethylene Ester (KEE) Sheet Membranes.

45-mil KEE Membrane PHYSICAL PROPERTIES:

Thickness (nominal)	ASTM D-751	0.045 (1.1 mm)
Breaking Strength	ASTM D-751 Grab	375 x 350lbs (1.7 x 1.6 kN)
Tensile Strength	ASTM D-882	8500 psi (598 kgf/cm$_2$)
Tear Strength	ASTM D-751	100 lbs (445 N)
Dynamic Puncture	ASTM D-5635	20 joules
Low Temperature Flex	ASTM D-2136	30$_o$F (-34$_o$C)
Dimensional Stability	ASTM D-1204	< 1.0%
Seam Strength ASTM	D-751	100% of fabric strength
Coating Adhesion	ASTM D-751	Cannot initiate coating peel
Hydrostatic Resistance	ASTM D-751	650 psi (46 kgf/cm$_2$)
Oil Resistance	MIL-C-20696C	No swelling, cracking, leaking
Ozone Resistance	ASTM D-1149	No effect

B. Flashing Membrane: Nominal 45-mil non-reinforced KEE membrane shall be used for all flashing requirements to match the field membrane and warranty expectations selected for the roofing system. .

C. Acceptable substrate(s)

1. Authorized rigid insulation or cover board.
2. Structural Concrete, insulated or non-insulated.*
3. Insulated Steel Decking.
4. Existing smooth surfaced, bituminous roof or existing single ply roof membrane.*
5. Existing, aggregate surfaced, bituminous roof with authorized insulation or cover board.
6. Exterior grade plywood; insulated or non-insulated.*
7. Cementitious fiber or Gypsum, insulated or non-insulated.

8. Cellular, light weight insulating concrete.*
9. Authorized base sheet with an adhered insulation/cover board assembly.

*A slip sheet or separation layer is recommended. The "requirement" for including and/or the selection of an appropriate slip sheet will be determined by the system selected, surface texture of the substrate, environmental and/or fire classification requirements of the project roof assembly.

D. Acceptable Manufacturer:

1. FiberTite, a division of the Seaman Corporation.
2. Or Equal products by Tremco or Garland.
3. Equal products must be prior approved by the owner a minimum of 21 days prior to the bid date to insure quality consistency of proposed substitutions.

2.03 RELATED MATERIALS: The following product(s) / material(s) shall be supplied by Membrane Manufacturer.

A. Vertical Membrane Adhesives: Adhesives (Vertical Surfaces), supplied by ***Manufacturer*** have been specially formulated for KEE Roofing Systems. Application technique and coverage rates will vary according to substrate and environmental conditions. See Table 1 for average coverage rates on common substrates.

1. FTR-190 Adhessive: A solvent base, contact (two sided) bonding adhesive, designed for bonding non-fleece back KEEe membranes to properly prepared and pre-authorized horizontal and vertical substrates.

Table 1: *Adhesive rates for common substrates.*

Membrane: 45-mil Vertical Flashing Adhesive KEE membranes
Adhesive: Solvent FTR 190 Bonding Adhesive

Surface/ Substrate	Application Rate
Back side of Membrane	1.0 gal/100 ft²
Polyisocyanurate Insulation	1.2 gal/100 ft²
Gypsum Core Cover boards	1.2 to 1.5 gal/100 ft²
Masonry	1.2 gal/100 ft²
Wood	1.0 gal/100 ft²

B. Sealant: A one-component gun-grade polyether sealant to seal flashing termination.

C. Pitch Pan Sealant: A one component pour able, self leveling, polyurether sealant to fill "pitch pans".

D. KEE Clad Metal: To fabricate metal flashing, 4' x 10' sheets of 24 gauge hot dipped G-90 steel, or 0.040 thick 3003H14 aluminum, laminated with a 0.020 mil polymeric coating.

E. Pre-Molded Flashing(s): Injection molded vent stack and inside/outside corner flashing using KEE/EIP compound.

F. KEE Non-Reinforced Membrane: Field fabrication membrane, 0.060 mil non-reinforced EIP membrane.

G. Walk Way & Protection Pads: High grade walk way / protection material with "slip resistant" design using KEE compound.

H. Fasteners

1. Membrane Fasteners: To secure KEE membrane to steel, wood and structural concrete decks. A #15-13, buttress threaded, #3 Phillips head fastener constructed of case hardened carbon steel with a reduced diameter drill point and Sentri XP corrosion resistant coating.
2. Insulation Fasteners: To secure insulation to steel, wood and structural concrete decks. A #14-13, heavy duty threaded steel #3 Phillips truss, self tapping corrosion resistant fastener.
3. Concrete Membrane Fastener: TapGrip: To secure insulation and membrane(s) to structural concrete decks, masonry block and brick. Hard carbon steel, threaded fastener for attachment using a 3/16 inch pilot hole.
4. Concrete Insulation Fastener: NTB-1H: To secure insulation, base sheet and /or membrane to gypsum and cementitious fiber decks. Threaded, glass-filled nylon fastener, with locking wire barbs.
5. Peel Rivets: To secure insulation, base sheet and /or membrane to steel, wood, cement fiber, tectum, fiberglass and lightweight plank decks. Thread less, high magnesium aluminum alloy fastener.
6. BS Fasteners: Coated fastener and stress plate to secure base sheet to gypsum and cellular lightweight insulating concrete decks.
7. Purlin Fasteners: To secure FiberTite membrane to the existing metal roofing systems structural members.

I. Barbed Stress Plates: Used to anchor membrane, are 2.5 inch x 1.5 inch rectangular in dimension with 0.75 inch radial corners, manufactured from 18 gauge AZ-50 galvalume steel with a 0.250 inch diameter hole in its center. The plate has a raised reinforcement area and eight "barbs". OR Used to anchor membrane, are 2.375 inch round steel plate manufactured from 20 gauge galvalume steel with a 0.250 inch diameter hole in its center. The plate has a raised reinforcement area and "barbs".

J. Sand Dollar Insulation Stress Plates: Used to secure insulation to steel, wood and structural concrete decking. Manufactured from high density polyethylene, 3 inch in diameter, designed with a self locking mechanism to secure the head of the insulation fasteners into the plate.

K. Termination Bar: Membrane flashing(s) restraint / termination seals, nominal 1/8 inch x 1 inch x 10' 6060-T5 extruded aluminum bar with pre-punched slots, 8 inch on center.

L. Metal Fascia System: Two piece "snap-on" pre-formed, metal edge system.

M. Insulation: ***Hunter Panels 3.1" DWD Polisocyanurate Insulation providing Class A Roofing assembly***.

2.04 RELATED MATERIALS

A. Wood Nailers: Wood Nailers are being tested to determine the effect preservatives on metal components. Borate treated lumber seem to be the less corrosive and is strongly recommended. Installation of other types of treated lumber should be verified with a design professional.

1. Wood shall be No. 2 or better construction grade lumber. *Creosote or asphaltic type preservatives are not acceptable.*
2. Minimum top nailer thickness shall be 1.5 inch nominal.

B. Insulation

a. USG Securerock ½' Glassmat Boards.

NOTE: *For the purpose of this guide specification, unless explicitly defined otherwise, the term insulation is used interchangeably to refer to rigid insulation materials, tapered or flat, cover board, thermal barriers and or multilayered composites.*

1. Insulation shall be installed, where specified and/or required to provide a suitable surface for the Manufacturer Roofing System and/or meet desired thermal values.
2. Acceptable products must be pre-approved in writing by Manufacturer and comply with the following minimal characteristics and classification(s).
3. Pre-Approved Products
   i. USG ½' Securerock Glassmat.
4. If requested, the manufacturer shall provide to the building owner, a written statement, with a copy to Manufacturer that specifically expresses warranty conditions for the successful installation and performance of their insulation.

3.00 EXECUTION

3.01 GENERAL

A. The "Authorized" roofing contractor is responsible for ensuring appropriate system specific addendums included by reference are strictly applied to GS06; General Guide Specifications for Installation of Manufacturer Roofing Systems.

B. The roofing contractor is responsible for providing a suitable substrate surface for the proper installation of the KEE Roofing System, roof insulation and specified components.

C. Application of KEE materials constitutes an agreement that the roofing contractor has inspected and found the substrate suitable for the installation of the KEE Roofing System.

D. The roofing contractor is responsible for coordinating the installation to ensure that the system remains watertight at the end of each working day

3.02 SUBSTRATE PREPARATION

A. The roofing contractor is responsible for verifying that the deck condition and/or existing roof construction is suitable for the specified installation of the KEE Roofing System.

B. The KEE Roofing System Manufacturer requires fastener withdrawal values (pull out tests) on all re-roofing projects to verify the suitability of decking to accept a mechanically fastened insulation and/or membrane roofing system.

C. Examine surfaces for inadequate anchorage, low areas that will not drain properly, foreign material, ice, wet insulation, unevenness or any other defect which would prevent the proper execution and quality application of the KEE Roofing System as specified.

D. Prepared substrate shall be smooth, dry, and free of debris and/or any other irregularities which would interfere with the proper installation of the KEE Roofing System.

E. Do not proceed with any part of the application until all defects and preparation work have been corrected and complete.

3.03 SUBSTRATE PREPARATION

A. Wood

1. Wood decking that is less than 3/4 inch will be considered for application by Manufacturer. Fastener withdrawal tests shall be performed on all "Non-FM Approved" wood decking (wood plank less than 2 inches thick or plywood less than 3/4 inch thick) to determine suitability and appropriate fastener patterns for the components of the new KEE Roofing System.
2. Wood decking shall be sound, no dry rot, well seasoned or kiln dried and of proper thickness to accommodate design loads (including wind up-lift) according to specified design criteria and/or local building code requirements.
3. Wood decking should provide positive slope and subsequent positive drainage of the new KEE Roofing System.
4. All exposed wood trim shall be painted by owner unless otherwise directed during pre-roof walk.

3.05 WOOD NAILERS

A. Install treated lumber at the same heights as insulation layer or adjacent construction ± 1/4 inch Continuous treated wood nailers are to be installed at all perimeters, around roof projections and penetrations as shown in approved details. In re-cover applications, the surface under the wood nailers shall be FREE OF ALL GRAVEL and shall be as even as possible.

B. Where wood nailers are installed directly on the substrate, the substrate shall be carefully examined to confirm that the entire area provides a suitable fastening surface. All defects shall be repaired by the appropriate trade prior to installation.

C. Nailers shall be at least 3½ inch wide and 1.5 inch high and installed and anchored in such a manner to resist a force of 250 lbs. per linear foot of wood blocking in any direction.

D. Nailers along parapets, curbs and expansion joints are recommended for insulated decking. Consult Manufacturer Technical Customer Services for optional / alternate membrane termination / securement methods.

3.07 ROOF INSULATION

A. General

1. Roof insulation shall be installed where by the long dimension of the board(s) run in parallel alignment and the short dimensions are staggered.
2. Insulation shall be installed with minimum joint dimensions and shall be tightly butted where possible. Maximum joint widths shall be 3/8 inch. Damaged corners shall be cut out and replaced with an insulation piece a minimum of 12 inch x 12 inch Pieces which are cut from larger panels and are smaller than one square foot are not acceptable.
3. Install no more than can be covered during the same working day.
4. Taper roof insulation to drain sumps using tapered edge strips. If an insulation layer is 1-1/2 inch or less, taper 12 inch from the drain bowl. If insulation thickness exceeds 1-1/2 inch, taper 18 inch from the drain bowl. All taper boards or pieces must be adhered or mechanically fastened with a minimum of two fasteners per board.
5. When a cover board and/or multiple layers are installed each layer should be offset from the previous layer a minimum of 12 inch on center.
6. At the end of each working day, provide a watertight cover on all unused insulation as to avoid moisture penetration.

3.08 INSTALLATION OF KEE MEMBRANE(s)

A. Quality Control

1. It will be the responsibility of the roofing contractor to initiate and maintain a QC program to govern all aspects of the installation of the KEE Roofing System
2. The project foreman and or supervisor will be responsible for the daily execution of the QC program which will include but is not limited to the supervision, inspection and probing of all heat welding incorporated within the KEE Roofing System
3. If inconsistencies in the quality of the application of the composite, membrane and/or welds are found, all work shall cease until corrective actions are taken to ensure the continuity the installation.

B. General

1. Work shall be coordinated to ensure that sequencing of the installation promotes a 100% watertight installation at the end of each day.
2. All KEE Roofing Systems or sections shall be designed utilizing and determined to be in compliance with the procedures outlined within the current publication of ASCE Standard 7. Alternative designs may be determined using the criteria within Factory Mutual Research Loss Prevention Data.
3. A KEE Roofing System may utilize either conventional "roll goods" or pre-fabricated custom rolls or a combination of both. Custom Rolls must be utilized for ballast and metal recover applications. *(Custom rolls of variable width and length are available upon request.Consult with FiberTite.)*
4. Restrictions regarding outside ambient air temperature are relative only to the exposure limits of the workers and/or adhesives.
5. When using adhesives outside ambient air temperature should be above 40°. Curing or drying time of the adhesive will be affected by ambient temperatures and must be taken into consideration when determining flashing lengths.
6. KEE Roofing System shall only be installed over properly prepared and sound substrates, free from excessive surface roughness, dirt, debris and moisture.

C. Mechanically Attached KEE Roofing Systems

1. Addendum MA06 is included in this specification and considered a governing guide and supplement by reference for the installation of mechanically fastened 45 mil KEE membrane roofing systems.

D. Peel Stops

1. Addendum AD06 is included in this specification and considered a governing guide and supplement by reference for the installation of 45 mil KEE membrane roofing systems.

E. Hot Air Welding

1. General
   a. All field seams exceeding 10 feet in length shall be welded with an approved automatic welder.
   b. All field seams must be clean and dry prior to initiating any field welding.
   c. Remove foreign materials from the seams (dirt, oils, etc.) with Acetone or authorized alternative. Use CLEAN WHITE COTTON cloths and allow approximately five minutes for solvents to dissipate before initiating the automatic welder. ***Do not use denim or synthetic rags for cleaning***.
   d. All welding shall be performed only by qualified personnel to ensure the quality and continuity of the weld.
   e. Contaminated areas within a seam will inhibit proper welding and will require a membrane patch
2. Hand Welding
   a. The lap or seam area of the membrane should be intermittently tack welded to hold the membrane in place.
   b. The back "interior" edge of the membrane shall be welded first, with a thin, continuous weld to concentrate heat along the exterior edge of the lap during the final welding pass.

c. The nozzle of the hand held hot air welder shall be inserted into the lap at a 45° angle to the lap. Once the polymer on the material begins to flow, a hand roller shall be use to apply pressure at a right angle to the tip of the hand welder. Properly welded seams shall utilize a 1-1/2 inch wide nozzle, to create a homogeneous weld, a minimum of 1-1/2 inches in width.
d. Smaller nozzles may be used for corners, and other field detailing, maintaining a minimum 1 inch weld.

3. Automatic Machine Welding
   a. Proper welding of the KEE Membrane can be achieved with a variety of automatic welding equipment. Contact KEE Manufacturer for specific recommendations.
   b. Follow all manufacturers' instructions for the safe operation of the automatic welder.
   c. Follow local code requirements for electric supply, grounding and surge protection.
   d. The use of a dedicated, portable generator is highly recommended to ensure a consistent electrical supply, without fluctuations that can interfere with weld consistency.
   e. Properly welded seams shall utilize a 1-1/2 inch wide nozzle, to create a homogeneous weld, a minimum of 1-1/2 inches in width.

F. Inspection
1. The job foreman and/or supervisor shall initiate daily inspections of all completed work which shall include, but is not limited to the probing of all field welding with a dull pointed instrument to assure the quality of the application and ensure that any equipment or operator deficiencies are immediately resolved.
2. Ensure that all aspects of the installation (sheet layout, attachment, welding, flashing details, etc.) are in strict accordance with the most current KEE Roofing Systems Specifications and Details.
3. Excessive patching of field seams because of inexperienced or poor workmanship will not be accepted at time of FINAL INSPECTION FOR WARRANTY ACCEPTANCE.
4. Any deviation from pre-approved specifications and/or details requires written authorization from the Manufacturer prior to application to avoid any warranty disqualification.
5. It is the contractor, job foreman, and supervisor and owners representative to perform a final "self" inspection on all seams prior to requesting the inspection for warranty issuance by the Manufacturer.

3.09 FLASHING

A. Clean all vents, pipes, conduits, tubes, walls, and stacks to bare metal. All protrusions must be properly secured to the roof deck with approved fasteners. Remove and discard all lead, pipes and drain flashing. Flash all penetrations according to approved details.

B. Remove all loose and / or deteriorated cant strips and flashing.

C. Flash all curbs, parapets and interior walls in strict accordance with approved Manufacturer details.

D. All flashing shall be adhered to properly prepared, approved substrate(s) with proper Adhesive or mastic applied in sufficient quantity to ensure total adhesion. Specific projects may require the use of FTR-190 Adhesive as a bonding adhesive for KEE membrane. Contact Manufacturer prior to this application.

E. The base flange of all membrane flashing shall extend out on to the plane of the deck, beyond the wood nailers to a maximum width of 8 inches.

F. Vertical flashing shall be terminated no less than 8 inch above the plane of the deck with approved termination bar and counter-flashing or metal cap flashing.

G. When using adhesive, vertical wall flashing termination shall not exceed 30 inches without supplemental mechanical attachment of the flashing between the deck and the termination point of the flashing.

H. Complete all inside and outside corner flashing details with Manufacturer supplied pre-formed corners or an approved field fabrication detail.

I. Probe all seams with a dull, pointed probe to ensure the weld has created a homogeneous bond.

J. Install penetration accessories in strict accordance with approved details. Ensure penetration accessories have not impeded in any way the working specification. (Refer to the related trade for the technical specification).

3.10 METAL FLASHING

A. All perimeter edge details are to be fabricated from KEE Clad Metal Min. 24 gauge or utilize a prefabricated Fascia System with a Kynar finish.

B. Ensure all fascia extend a minimum of 2 inch lower than the bottom of the wood nailers.

C. Fasten all metal flashing to wood nailers or approved substrate with approved fasteners 8 inches on center.

D. Break and install FiberClad metal in accordance with approved details, ensuring proper attachment, maintaining 1/2 inch expansion joints and the installation of a minimum 2 inch bond breaker tape prior to sealing the joint.

E. Solidly weld KEE Clad metal expansion joints with a 6 inch strip of KEE membrane welded to the KEE Clad metal, covering the bond breaker tape (cover plates are optional).

F. Roof Drains (contractor shall replace all existing drains with new cast iron drains)

1. Flash all roof drains in accordance with roof drain details.
2. Replace all drain bolts and bolts used to hold the drain compression ring to the drain bowl.
3. KEE non-reinforced 60 mil membrane shall be used for flashing the drain assembly. All drain assemblies shall be "sumped" and must be free of any asphalt or coal tar pitch residue prior to installation.
4. The drain target sheet should be sized and installed to provide for a minimum of 12 inch of exposed 60 mil on all sides of the drain.

3.11 SEALANTS

A. Apply authorized sealant(s) to all surface mounted reglets and per project requirements. Sealant(s) are to shed water. Follow all manufacturer's instructions and installation guides.

B. Use primer when recommended by the manufacturer.

C. Sealants will require periodic maintenance by the building owner’s maintenance personnel.

3.12 TEMPORARY SEALS

A. At the end of each working day or at the sign of rain, install temporary, 100% watertight seal(s) where the completed new roofing adjoins the uncovered deck or existing roof surface.

B. The authorized roofing contractor shall create and maintain the temporary seal in such a manner to prevent water from traveling beneath the new and / or existing roof system.

C. The use of plastic roofing cement is permissible when sealing to an existing built up roof.

D. If water is allowed to enter beneath the newly completed roofing, the affected area(s) shall be removed and replaced at no additional expense to the building owner.

E. Prior to the commencement of work, cut out and remove all contaminated membrane, insulation, roof cement or sealant and properly dispose off site.

3.13 WALKWAYS (Will be noted on Job-Walk)

A. Walkways and protection pads shall be installed at staging areas for roof top equipment maintenance or areas subject to regular foot traffic, (contractor shall use) existing layout as pattern for new walkpad installation.

B. Walkway Installation

1. Roofing membrane to receive walkway material shall be clean and dry.

2. Cut and position the walkway material as directed by the specifications or agreement.

3. Hot air weld the entire perimeter of the walk way to the previously cleaned KEE roofing membrane. Avoid excessive heating of the walk way material to prevent scorching the underlying roofing membrane.

C. Protection Pad Installation

1. Roofing membrane to receive protection pad material shall be clean and dry.
2. Prior to installing the protection pads (1/4 inch x 2' x 4'), weld a 6 inch x 6 inch strip of KEE membrane to each of the four corners of the back side of the pad. Position the strips in such a way that they overhang the edge of the pad a minimum of two inches around the 90° corner.
3. Position the protection pads as directed by the specifications or agreement and weld the visible portion of the previously applied stripping to the KEE roofing membrane.

3.15 COMPLETION

A. Remove any and all debris, excess materials and scrap of any kind from the roof and surrounding premises prior to demobilization.

B. Inspect all field welds, detailing and terminations to ensure a 100% the watertight installation.

3.16 WARRANTY INSPECTION

A. Upon completion of the project, the authorized roofing contractor shall complete and submit the Project Completion Notice to KEE Roofing Systems Manufacturer..

B. Upon receipt of the notice of completion, a Manufacturer Technical representative will schedule an inspection with a representative of the authorized roofing contractor to thoroughly review the installation and verify compliance with Manufacturer specifications.

C. Any corrections or modifications necessary for compliance with the specifications and acceptance for warranty *(punch list)* will be noted on the Final Inspection for Warranty Form.

D. Upon completion of all punch list items and final acceptance of the installation, a warranty as authorized by the KEE Roofing Systems Manufacturer will be issued.

END of SECTION

ADDENDUM-MA06
Addendum for Mechanically Attached FiberTite KEE Roofing Systems

MA06 is a "system specific" addendum to base specification for the design and installation of a quality high performance Mechanically Attached FiberTite KEE Roofing System. MA06 is not a stand alone guide specification and must be applied in concert with base specification.

PART 1 – GENERAL

A. General Guide Specification for Installation of KEE Roofing Systems are incorporated and considered inclusive herein and are to be followed without variation.

PART 2 – PRODUCTS

Refer to Base Specification

PART 3 – EXECUTION

Refer to Base Specification in addition to the following Sections.

3.07 ROOF INSULATION (Over Steel Deck and ½" USG Securerock Glassmat)

B. Preliminary Attachment of Insulation for Mechanically Attached Roofing Systems

1. Insulation shall be applied to or installed over properly prepared and pre-approved substrates, free of any debris, dirt, grease, oil or moisture.
2. All fasteners and stress plates for the mechanical attachment of insulation and / or cover board materials shall be Insulation Fasteners as provided by KEE Roofing System Manufacturer.
3. All fasteners and stress plates shall be Factory Mutual Research approved for mechanical attachment of insulation and comply with FM Standard 4470 for corrosion resistance.
4. General 1-90 attachment criteria require preliminary attachment for insulation and cover boards for mechanically attached membrane roofing systems. Insulation/cover board within the **FIELD** of the roof requires 6 fasteners and stress plates per 4' x 8' insulation board.
   a. **Perimeter** areas do not require an increase in the fastener density when the membrane is mechanically attached.
   b. **Corner** areas do not require an increase in the fastener density when the membrane is mechanically attached.
5. Fasteners shall be installed straight, tight and perpendicular to the decking complying with minimum penetration requirements of specific deck types. Do not over torque fasteners.
6. Fasteners shall be installed using depth sensing tool attachments to ensure proper installation.
7. Standing Seam Metal retrofit applications require that the base layer of insulation is loose laid between the raised metal roof profiles, matching their height to level the metal roof profile and support the top layer of insulation / cover board.
   a. Lay the "fill" insulation with the long dimension of the insulation in parallel alignment to and between the raised metal profiles.
   b. Install top layer of insulation or cover board perpendicular to the raised metal profiles.
8. Attach the top layer of Insulation/cover board using 6 fasteners and "locking" stress plates per 4' x 8' insulation board.
9. It may be possible to utilize adhesives for the preliminary attachment of the insulation layer(s) on **non-steel** deck projects. The insulation/cover board manufacturer must recommend and approve the specific board and adhesive combination in writing prior to Manufacturer granting approval for this method of preliminary securement.

3.08 INSTALLATION OF KEE MEMBRANE

A. 45-mil mil KEE Membrane Mechanically Attached (Class 1 Decks)

1. Rolls of 45 mil KEE roofing membrane are to be positioned and installed straight and snug but not taut. Stretching of the membrane places undue stress on the mechanical fasteners.
2. If using custom fabricated rolls, align the paneled rolls to stager the factory seams to prevent adjacent welds from falling on top of one another. Adjoining rolls shall overlap five inches and be properly shingled with the flow of water where possible. It is not uncommon and is acceptable for the factory laps to "buck" water.
3. The properly positioned membrane shall be attached using Membrane Fasteners and Stress Plates installed through the membrane and insulation assembly and engage the structural decking.
4. The Stress plates shall be installed straight and parallel to existing structural purlin members. All stress plates must set completely on the membrane allowing a minimum of 1/2 inch from the edge and allow sufficient room to facilitate welding.
5. Fastener row spacing and intervals shall be established to resist design pressures, determined in compliance with procedures outlined within the current publication of ASCE Standard 7. Alternative designs may be determined using the criteria within Factory Mutual Research Loss Prevention Data.
6. Table MA06 lists "general" default attachment requirements for the field of the roof, as applied to structural roof decks generally referred to as Class 1; minimum ¾-inch plywood, minimum 22 gauge steel or minimum 3,000 psi concrete.
7. Perimeter zone and corner zone enhancement is required on all mechanically fastened roofing systems. Perimeters and corners are defined as follows:
   a. Perimeter: 10% of the width of the roof areas or 40% of the height of the roof area, which ever is less to a minimum of 4-ft. Perimeter zones run parallel to all external roof edges including those with parapet walls.
   b. Corner zones are the square intersection of perimeters.
   c. Projects having variable roof levels shall treat the outer boundary of each level as a perimeter. Internal expansion joints, firewalls or adjoining building walls greater than 4 feet are not considered perimeter areas.
8. Perimeters and corners may be enhanced by:
   a. Installing "half" rolls of membrane fastened as prescribed by project requirements.
   b. Adding additional rows of fasteners through the top of the membrane system within the perimeter at prescribed intervals area and sealing with a 6 inch strip

Individual project, insurance and building code requirements can vary substantially. Consult with KEE Roofing System Manufacturer to see if design assistance and evaluation for determining acceptable fastener patters is available.

TABLE MA06 - 1

Design Pressure	Lap Structure	Lap Fastening
≤ -30 psf / FM1-60	51" on center	24" on center
	69" on center	12" on center
≤ –45 psf / FM1-90	51" on center	18" on center
	69" on center	12" on center

≤ –60 psf / FM1-120	51” on center	12” on center
	69” on center	6” on center
≤ –67.5 psf / FM1-135	51” on center	6” on center

END OF ADDENDUM MA06

SECTION 07600

FLASHING AND SHEET METAL

PART 1 - GENERAL

1.1 SUMMARY:

1.1.1 Section Includes: This section includes furnishing and installing of all flashing and sheet metal work indicated and specified, complete.

1.1.2 Related Documents: The Conditions of the Contract and Division 1 apply to this section as fully as if repeated herein.

1.2 REFERENCES:

The editions of standards and specifications published by the following organizations, and referenced herein, apply to the work only to the extent specified by the reference. Refer to Section 01422 for information concerning availability and use of references.

American Society for Testing and Materials (ASTM)
Sheet Metal and Air Conditioning Contractors National Association (SMACNA)
U.S. General Services Administration Federal Specifications (FS)

1.3 SUBMITTALS:

1.3.1 Shop Drawings: Submit shop drawings of fabricated items showing layout, profiles, methods of joining, and anchorage details, including reglets, counterflashings, gutters, downspouts, scuppers, conductor heads, pitch pockets, splash pans, parapet copings, gravel stops, and expansion joint systems.

1.3.2 Product Data: Submit manufacturer's product data, installation instructions and general recommendations for each fabricated product.

1.3.3 Submittal procedures and quantities are specified in Division 1.

1.4 QUALITY ASSURANCE:

Pre-application Conference: Before starting application of the roofing, hold a conference with representatives of the applicators and materials manufacturers of both the insulation and built-up roofing systems, the sheet metal installer, the roofing accessories installer, the mechanical and electrical equipment installers, the Contractor, the testing laboratory, the Architect and the Owner in attendance. The conference shall assure a clear understanding of the drawings and specifications, resolve possible conflicts and establish coordination between all parties involved.

1.5 DELIVERY, STORAGE, AND HANDLING:

1.5.1 Delivery: Package and protect materials during shipment. Uncrate and inspect materials for damage, dampness, and wet-storage stains upon delivery to the job site. Remove from the site and replace damaged materials that cannot be restored to like-new condition.

1.5.2 Storage: Store materials in dry, weather-tight, ventilated areas until immediately before installation.

1.5.3 Handling: Handle sheet metal items to avoid damage to surfaces, edges, and ends.

1.6 COORDINATING AND SCHEDULING:

Secure field measurements required for proper and adequate fabrication and installation of the work. Coordinate sheet metal work related to roofing work with the roofing installer.

PART 2 - PRODUCTS

2.1 MATERIALS:

2.1.1 Galvanized Sheet Metal: Galvanized iron or steel sheet, ASTM A 653, with minimum zinc coating of 1.25 ounces per square foot and 0.2 percent copper bearing.

2.1.2 Aluminum Sheet Metal: ASTM B 209, 3003-H14 alloy and temper.

2.1.3 Zinc Alloy Sheet Metal: Zinc-copper-titanium alloy conforming to Fed. Spec QQ-Z-100.

2.1.4 Solder: Solder for Use With Galvanized Steel, Zinc Alloy, or Copper Sheet Metal: ASTM B 32, 50-50 tin/lead solder, with rosin flux.

2.1.5 Butyl Sealer: Where it is impracticable to use a solder at joints and corners, seal with a butyl sealant. Acceptable products or equal:

Adco Seal; No. B-100
PTI Sealants; No. 707
Tremco; Butyl Sealant

2.1.6 Fasteners: Same metal or a metal compatible with the items it contacts. Use stainless steel fasteners to fasten dissimilar materials. Provide compatible washers where required to protect surface of sheet metals and to provide a watertight connection.

.1 Nails: Use case-hardened concrete nails over concrete and roofing nails over wood, of required lengths.

.2 Rivets: Pop rivets.

.3 Sheet Metal Screws: Self-drilling type, of proper size and material to suit conditions. Where wood nailers are provided, use galvanized or stainless steel wood screws as applicable.

2.1.7 Paper Slip Sheet: 5 pound rosin-sized building paper.

2.1.8 Waterproofing Sheet Underlayment: Minimum 35 mil thick aluminum foil backed, synthetic rubber based self-adhering sheet. Acceptable products or equal:

Polyken Technologies/Kendall Co.; Polyken 626 Foilastic
Protecto Wrap Co.; Fast Flash

2.1.9 Metal Accessories: Provide sheet metal clips, straps, anchoring devices and similar accessory units as required for installation of work, matching or compatible with material being installed, non-corrosive.

2.1.10 Reglet and Counterflashing Assembly: Fabricate of 26 gage galvanized steel sheet metal or 0.055 inch extruded aluminum. Acceptable products or equal:

Fry Reglet Corp.; Fry Springlock Flashing System Type ST
MM Systems Corporation; Snap-Tite RC-2
Dayton Superior Corp.; F-101

2.1.11 Non-Shrink Grout: Premixed, nonmetallic, non-corrosive, non-staining grouting compound containing silica sands, portland cement, shrinkage compensating agents and water reducing agents, meeting the requirements of ASTM C 1107. Acceptable products or equal:

Gifford Hill & Co., Inc.; Supreme
Master Builders; Masterflow 713
The Upco Company; Upcon Nonshrink

2.1.12 Flashing Cement: Refer to Section 07520.

2.2 FABRICATION:

2.2.1 General: Shop-fabricate work to greatest extent possible. Fabricate sheet metal work in accordance with the SMACNA "Architectural Sheet Metal Manual", Latest Edition, unless otherwise indicated. Fabricate for waterproof and weather-resistant performance, with expansion provisions. Form exposed sheet metal work without excessive oil-canning, buckling and tool marks, true to line and levels, with exposed edges folded back to form hems.

2.2.2 Seams: Fabricate nonmoving seams with flat-lock seams. Tin edges to be seamed, form seams, and solder. Form aluminum seams with seam sealer; rivet joints for additional strength where required.

2.2.3 Separations: Provide for separation of metal from noncompatible metal or corrosive substrates by coating concealed surfaces at locations of contact, with bituminous coating or other permanent separation as recommended by fabricator.

PART 3 - EXECUTION

3.1 EXAMINATION:

3.1.1 Examine surfaces against which sheet metal is to be placed to ensure that they are smooth, clean and free of defects.

3.1.2 Check base flashings to ensure that they extend at least 9 inches above the toe of cant and are securely fastened to the structure..

3.1.3 Do not start work until deficiencies have been corrected. Start of work of this section constitutes acceptance of the surfaces.

3.2 INSTALLATION:

3.2.1 Workmanship: Install sheet metal straight and true, with miters and joints accurately fitted, exposed work free of dents. Reinforce corners and make seams waterproof. Make provisions for expansion and contraction in sheet metal assemblies. Anchor work securely in place, conceal fasteners where possible.

.1 Install flanges of sheet metal items on top of last roofing ply in full bed of asphaltic plastic cement 1/8 inch thick.

3.2.2 Underlayment: Where stainless steel or aluminum is to be installed directly on cementitious or wood substrates, install a ship sheet of red rosin paper and a course of polyethylene underlayment.

3.2.3 Separations: Provide for separation of metal from noncompatible metal or corrosive substrates by coating concealed surfaces at locations of contact, with bituminous coating or other permanent separation as recommended by fabricator.

3.2.4 Soldering: Pretin edges of sheet metal before soldering. Solder slowly with heavy, well-heated, properly tinned coppers, to heat the seam thoroughly and completely sweat the solder through the full width of the seam. Use ample solder which results in the seam showing not less than 1 inch of evenly flowed solder. Solder immediately after application of flux. Upon completion of soldering, neutralize acid and thoroughly clean surfaces.

3.2.5 Edge Strips: Fabricate strips of galvanized steel of the same thickness as metal to be fastened. Secure edge strips in place at not more than 6 inches on center.

3.2.6 Splash Pans: Fabricate pans of 24 gage galvanized steel unless otherwise indicated. Form splash pans in accordance with Plate 36 of the SMACNA Manual including recommended dimensions, unless otherwise indicated. Form pans with corrugated or ribbed bottoms. Bed pans in plastic cement.

3.2.7 Reglets and Counterflashings: Install reglets and counterflashings in accordance with the manufacturer's printed installation drawings and instructions and indicated.

3.2.8 Flashing at Equipment Supports: Fabricate cap flashing of 20 gage galvanized steel unless otherwise indicated. Turn bottom 1/2 inch of exposed edges outward at a 45 degree angle and hem on the underside. Install with joints between sections lapped 3 inches and sealed with sealant. Maintain bottom of flashing at least 1 inch above top of cant.

3.2.9 Roof Drain Flashings: Roof drains are specified in Division 15. Provide a 30 inch square 2-1/2 pound lead sheet with cutout to fit into drain flashing ring. Set flashing sheet over the top roofing ply in a full bed of plastic cement. Strip-in flashing over lead sheet is specified in Section 07600.

3.2.10 Flashing at Roof Penetrations:

.1 Provide metal flashing for all pipes, ducts, conduits, equipment supports, and vent stacks projecting through the roof surface as indicated and required.

.2 Single Pipe and Conduit Runs and Pipe Stantion for Equipment Supports: Provide metal flashing for pipes and conduits in excess of 1 inch diameter. Fabricate flanged sleeves of 24 gage galvanized steel sheet. Set flange of sleeve over the top roofing ply in a full bed of plastic cement and nail to wood nailers at 3 inches on centers. Extend sleeve a minimum of 8 inches above the roof deck and lapped a minimum of 3 inches by a metal hood secured to the vent pipe by a draw band. Seal the area of the hood in contact with the vent pipe with sealant.

.3 Ducts, High Temperature Vent Stacks, and Structural Steel Equipment Supports: Curbs and cants are specified in Section 06100 and bituminous base flashings are specified in Section 07520. Fabricate bonnets in two section of 24 gage galvanized steel sheet. Provide collars and draw bands soldered to bonnets at ducts, pipes and vent stacks. Secure collars to ducts, pipes, and conduits with draw band and seal the area of collar in contact with the vent pipe with sealant. Cut bonnets to fit snugly around structural steel supports and weld to the projecting member. Corners shall be mitered and soldered. Turn bottom 1/2 inch of exposed edges outward at a 45 degree angle and hem on the underside.

3.2.11 Miscellaneous Flashings and Metal Trim: Miscellaneous flashings, metal trim, and their related components are not necessarily individually described. Furnish miscellaneous items and trim not mentioned or described in accordance with the intent of the drawings and specifications and as required to complete the work.

3.3 SHOP PAINTING:

Treat sheet metal surfaces which will be concealed in the finished work with an approved acid wash and then shop paint with one coat of an approved galvanized primer such as zinc dust-zinc oxide primer. Sheet metal surfaces which will be exposed in the finished work are specified to be treated and prime-painted under Section 09900.

END OF SECTION

34-003 – 01/27/2013

SECTION 07840

FIRESTOPPING

PART 1 – GENERAL

1.1 RELATED DOCUMENTS

A. Drawings and general provisions of the Contract, including General and Supplementary Conditions and Division 1 Specification Sections, apply to this Section.

1.2 SUMMARY

A. This section includes firestopping for through-penetrations through the following fire-resistance rated assemblies, including both blank openings and openings containing penetrating items:

1. Roof-ceiling assemblies.
2. Walls and partitions.

B. Related Sections include the following:

1. Division 7 – Section 07900 – Joint Sealers
2. Division 9 – Section 09250 – Gypsum Board
3. Mechanical Drawings – Mechanical Insulation
4. Mechanical Drawings – Plumbing
5. Division 16 – Sections 16010 and 16050 – Basic Electrical Materials and Methods

1.3 PERFORMANCE CRITERIA

A. FIRE TEST REQUIREMENTS

1. Underwriters Laboratories, Inc. (UL):

a. ANSI/ UL1479, “Fire Tests of Through Penetration Firestops”.
b. ANSI/ UL2079, “Tests for Fire Resistance of Building Joint Systems”.
c. ANSI/ UL263, “Fire Tests of Building Construction and Materials”.
d. ANSI/ UL723, “Surface Burning Characteristics of Building Materials”.

2. American Society of Testing and Materials (ASTM):
a. ASTM E-814, “Fire Tests of Through Penetration Fire Stops”.
b. ASTM E-1966, “Test Method for Fire Resistive Joint Systems”.

c. ASTM E-119, “Fire Tests of Building Construction and Materials”.
d. ASTM E-84, “Surface Burning Characteristics of Building Materials”.

B. REFERENCES

1. Underwriters Laboratories (UL) of Northbrook, IL “Fire Resistance Directory”.

   a. Through Penetration Firestop Systems (XHEZ)
   b. Joint Systems (XHBN)
   c. Fill, Void or Cavity Materials (XHHW)
   d. Firestop Devices (XHJI)
   e. Forming Materials (XHKU)
   f. Wall Opening Protective Materials (CLIV)

2. All major building codes:

   a. International Building Code published by ICC
   b. California Building Code (CBC) 2010 Edition.

3. National Fire Protection Association (NFPA) of Quincy, MA “NFPA 101: Life Safety Code”.

4. National Fire Protection Association (NFPA) of Quincy, MA “NFPA 70: National Electrical Code”.

5. Factory Mutual Approvals (FM) of Norwood, MA “FM 4991: Standard for Approval of Firestop Contractors”.

C. PERFORMANCE REQUIREMENTS

1. Provide products that upon curing, do not re-emulsify, dissolve, leach, breakdown or otherwise deteriorate over time from exposure to atmospheric moisture, sweating pipes, ponding water or other forms of moisture characteristic during and after construction.

2. Provide firestop sealants sufficiently flexible to accommodate motion such as pipe vibration, water hammer, thermal expansion and other normal building movement without damage to the seal.

3. Pipe insulation shall not be removed, cut away or otherwise interrupted through wall or floor openings. Provide products appropriately tested for the thickness and type of insulation utilized.

4. Fire rated pathway devices shall be the preferred product and shall be installed in all locations where frequent cable moves, add-ons and changes will occur.

5. When mechanical cable pathways are not practical, openings within walls and floors designed to accommodate voice, data and video cabling shall be provided with re-enterable products specifically designed for retrofit.

6. Provide fire-resistive joint sealants sufficiently flexible to accommodate movement such as thermal expansion and other normal building movement without damage to the seal.

7. Provide fire-resistive joint sealants designed to accommodate a specific range of movement and tested for this purpose in accordance with a cyclic movement test criteria as outlined in Standards, ASTM E-1399, ASTM E-1966 or ANSI/ UL 2079.

8. Provide fire-resistive joint systems subjected to an air leakage test conducted in accordance with Standard, ANSI/ UL2079 with published L-Ratings for ambient and elevated temperatures as evidence of the ability of the fire-resistive joint system to restrict the movement of smoke.

9. Pipe insulation shall not be removed, cut away,or otherwise interrupted through wall or floor openings. Provide products appropriately tested for the thickness and type of insulation utilized.

10. Provide T-Rating Collar Devices tested in accordance with ASTM E 814 or ANSI/UL1479 for metallic pipe penetrations requiring T-Ratings per the applicable building code.

1.4 SUBMITTALS

A. Product Data: For each type of firestopping product indicated.

B. System Drawings: Submit documentation from a qualified third-party testing agency that is applicable to each firestopping system configuration for construction, joint opening width and/or penetrating items.

C. Product Certificates: Certificate of conformance signed by manufacturers of firestopping products certifying that products comply with requirements.

D. Submittal procedures and quantities are specified in Division 1.

1.5 QUALITY ASSURANCE

A. Provide firestopping systems that comply with the following requirements and those specified in “Performance Criteria” Article:

1. Firestopping tests are performed by a qualified, testing and inspection agency. A qualified testing and inspection agency is UL, or another agency performing testing and follow-up inspection services for firestop systems acceptable to authorities having jurisdiction.

2. Firestopping products bear classification marking of qualified testing and inspection agency.

B. Engage an experienced installer who is certified, licensed, FM Approved in accordance with FM 4991 or otherwise qualified by the firestopping manufacturer as having been provided the necessary training to install firestop products per specified requirements. A manufacturer’s willingness to sell its firestopping products to Contractor or to an installer engaged by Contractor does not in itself confer qualifications on buyer.

C. Obtain firestop systems for each type of penetration or joint opening and construction condition indicated from a single manufacturer.

D. Conduct conference at Project site to comply with requirements in Division 1 Section “Project Meetings”.

1.6 DELIVERY, STORAGE AND HANDLING

A. Deliver firestopping products to Project site in original, unopened containers or packages with intact and legible manufacturer’s labels identifying product and manufacturer, date of manufacture; lot number; shelf life, if applicable; qualified testing and inspection agency’s classification marking; and mixing instructions for multicomponent materials.

B. Store and handle materials for firestopping products to prevent their deterioration or damage due to moisture, temperature changes, contaminants or other causes.

1.7 PROJECT CONDITIONS

A. Do not install firestopping products when ambient or substrate temperatures are outside limitations recommended by manufacturer.

B. Do not install firestopping products when substrates are wet due to rain, frost, condensation, or other causes.

C. Do not use materials that contain flammable solvents.

1.8 COORDINATION

A. Coordinate construction of openings and penetrating items to ensure that through-penetration firestop systems are installed according to specified requirements.

B. Coordinate sizing of sleeves, openings, core-drilled holes or cut openings to accommodate through-penetration firestop systems.

C. Schedule installation of firestopping after completion of penetrating item installation but prior to covering or concealing of openings.

PART 2 – PRODUCTS

2.1 FIRESTOPPING, GENERAL

A. Provide firestopping products that are compatible with one another, with the substrates forming openings, and with the items, if any, penetrating through-penetration firestop systems, under conditions of service and application, as demonstrated by firestopping products manufacturer based on testing and field experience.

B. Provide components for each firestopping system that are needed to install fill materials. Use only components specified by the firestopping manufacturer and approved by the qualified testing agency for the designated fire-resistance-rated systems.

2.2 ACCEPTABLE MANUFACTURERS

A. Subject to compliance with through-penetration firestop systems (XHEZ) and/or joint systems (XHBN) listed in Volume 2 of the UL Fire Resistance Directory, provide products of the following manufacturers as identified below:

1. Specified Technologies, Inc. (STI), Somerville, New Jersey
800 – 992 – 1180

2. Other manufacturers listed in the UL Fire Resistance Directory – Volume 2.

2.3 MATERIALS

A. General: Use only firestopping products that have been tested for specific fire-resistance-rated construction conditions conforming to construction assembly type, penetrating item type or joint opening width and movement capabilities, annular space requirements, and fire-rating involved for each separate instance.

B. Latex Sealants: Single component latex formulations that upon cure do not re-emulsify during exposure to moisture, the following products are acceptable:

1. Specified Technologies, Inc. (STI) SpecSeal Series SSS Intumescent Sealant

2. Specified Technologies, Inc. (STI) SpecSeal Series LCI Intumescent Sealant

3. Specified Technologies, Inc. (STI) SpecSeal Series LC Endothermic Sealant

4. Specified Technologies, Inc. (STI) SpecSeal Series AS Elastomeric Spray

5. Specified Technologies, Inc. (STI) SpecSeal Series ES Elastomeric Sealant

C. Firestop Devices: Factory-assembled steel collars lined with intumescent material sized to fit specific outside diameter of penetrating item, the following products are acceptable:

1. Specified Technologies, Inc. (STI) SpecSeal Series SSC Firestop Collars

2. Specified Technologies, Inc. (STI) SpecSeal Series LCC Firestop Collars

D. Fire Rated Cable Pathways: STI EZ-PATH™ Brand device modules comprised of steel raceway with intumescent foam pads allowing 0 to 100 percent cable fill, the following products are acceptable:

1. Specified Technologies Inc. (STI) EZ-PATH™ Fire Rated Pathway

E. Wall Opening Protective Materials: Intumescent, non-curing pads or inserts for protection of electrical switch and receptacle boxes to reduce horizontal separation to less than 24”, the following products are acceptable:

1. Specified Technologies, Inc. (STI) SpecSeal Series SSP Firestop Putty Pads

2. Specified Technologies, Inc. (STI) SpecSeal Series EP PowerShield Insert Pads

F. Firestop Putty: Intumescent, non-hardening, water resistant putties containing no solvents, inorganic fibers or silicone compounds, the following products are acceptable:

1. Specified Technologies, Inc. (STI) SpecSeal Series SSP Firestop Putty

G. Wrap Strips: Single component intumescent elastomeric strips faced on both sides with a plastic film, the following products are acceptable:

1. Specified Technologies, Inc. (STI) SpecSeal Series RED Wrap Strip

2. Specified Technologies, Inc. (STI) SpecSeal Series BLU Wrap Strip

H. Firestop Pillows: Re-enterable, non-curing, mineral fiber core encapsulated with an intumescent coating contained in a flame retardant poly bag, the following products are acceptable:

1. Specified Technologies, Inc. (STI) SpecSeal Series SSB Firestop Pillows

I. Mortar: Portland cement based dry-mix product formulated for mixing with water at Project site to form a non-shrinking, water-resistant, homogenous mortar, the following products are acceptable:

1. Specified Technologies, Inc. (STI) SpecSeal Series SSM Firestop Mortar

J. Silicone Sealants: Moisture curing, single component, silicone elastomeric sealant for horizontal surfaces (pourable or nonsag) or vertical surface (nonsag), the following products are acceptable:

1. Specified Technologies, Inc. (STI) Pensil 300 Silicone Sealant

2. Specified Technologies, Inc. (STI) Pensil 300 SL Self-Leveling Silicone Sealant

K. Silicone Foam: Multicomponent, silicone-based liquid elastomers, that when mixed, expand and cure in place to produce a flexible, non-shrinking foam, the following products are acceptable:

1. Specified Technologies, Inc. (STI) Pensil 200 Silicone Foam

L. Firestop Plugs: Re-enterable, foam rubber plug impregnated with intumescent material for use in blank openings and cable sleeves, the following products are acceptable:

1. Specified Technologies, Inc. (STI) SpecSeal Seried FP Firestop Plug

M. Fire Rated T Rating Collar Device: Louverred steel collar system with synthetic aluminized polymer coolant wrap installed on metallic pipes

where T Ratings are required by applicable building code requirements, the following products are acceptable:

1. Specified Technologies, Inc. (STI) SpecSeal T-Collar Device

N. Fire-Rated Cable Grommet: Molded two-piece grommet made from plenum grade polymer with a foam inner core for sealing individual cable penetrations up to 0.27 in. (7mm) diameter, the following products are acceptable:

1. Specified Technologies, Inc. (STI) Ready Firestop Grommet

PART 3 – EXECUTION

3.1 PREPARATION

A. Examination of Conditions: Examine areas and conditions under which work is to be performed and identify conditions detrimental to proper or timely completion.

B. Surfaces to which firestop materials will be applied shall be free of dirt, grease, oil, scale, laitance, rust, release agents, water repellents, and any other substances that may inhibit optimum adhesion.

C. Provide masking and temporary covering to prevent soiling of adjacent surfaces by firestopping materials.

D. Do not proceed until unsatisfactory conditions have been corrected.

3.2 FIRESTOPPING INSTALLATION

A. General Requirements: Install through-penetration firestop systems and fire-resistive joint systems in accordance with “Performance Criteria” Article and in accordance with the conditions of testing and classification as specified in the published design.

B. Manufacturer’s Instructions: Comply with manufacturer’s instructions for installation of firestopping products.

1. Seal all openings or voids made by penetrations to ensure an air and water resistant seal.

2. Protect materials from damage on surfaces subjected to traffic.

3. Apply a suitable bond-breaker to prevent three-sided adhesion in applications where this condition might occur such as the intersection of a gypsum wallboard/steel stud wall to floor or roof assembly where the joint is backed by a steel ceiling runner or track.

4. Where joint application is exposed to the elements, fire-resistive joint sealant must be approved by manufacturer for use in exterior applications and shall comply with ASTM C-920, “Specification for Elastomeric Joint Sealants”.

3.3 FIELD QUALITY CONTROL

A. Inspections: Owner shall engage a qualified independent inspection agency to inspect through-penetration firestop systems.

B. Keep areas of work accessible until inspection by authorities having jurisdiction.

C. Where deficiencies are found, repair or firestopping products so they comply with requirements.

3.4 ADJUSTING AND CLEANING

A. Remove equipment, materials and debris, leaving area in undamaged, clean condition.

B. Clean all surfaces adjacent to sealed openings to be free of excess firestopping materials and soiling as work progresses.

END OF SECTION

34-003 – 02/25/2014

SECTION 07900

JOINT SEALERS

PART 1 - GENERAL

1.1 SUMMARY:

1.1.1 Section Includes: Sealant work, except as otherwise specified, required to weatherproof the building(s), and including interior sealant work. This section contains requirements pertaining to all weather and interior sealant work throughout the project and becomes a part of each and every section calling for sealant and calking, unless otherwise specified, as though written in full in each section.

1.1.2 Related Documents: The Conditions of the Contract and Division 1 apply to this section as fully as if repeated herein.

1.1.3 Related Work:

.1 Sealants for firestopping systems are specified in Section 07840.

.2 Sealants for glazing work are specified in Section 08800.

1.2 REFERENCES:

The editions of American Society for Testing and Materials (ASTM) Standards referenced herein apply to the work only to the extent specified by the reference thereto. Refer to Section 01422 for information concerning availability and use of references.

1.3 SUBMITTALS:

1.3.1 Product Data: Submit copies of manufacturer's specifications, recommendations and installation instructions for each type of sealant and related material required.

.1 Include manufacturer's letter of certification, or certified test reports indicating that each material complies with the requirements specified herein and is suitable for the applications indicated. Indicate by transmittal that a copy of each instruction has been forwarded to the installer.

.2 Include manufacturer's letter of certification indicating that sealants, primers and cleaners comply with regulations controlling use of volatile organic compounds.

1.3.2 Samples: Submit samples indicating the color range available for each sealant material intended for installation in locations exposed to view. Materials installed before approval of color will be subject to removal and replacement with approved material.

1.3.3 Submittal procedures and quantities are specified in Division 1.

1.4 QUALITY ASSURANCE:

1.4.1 Manufacturer's Qualifications: Obtain joint sealants from a single manufacturer for each different product required. Obtain elastomeric sealants only from manufacturers who will, if required by the Architect, send a qualified technical representative to the Project site to advise the installer of proper procedures and precautions for the use of these materials.

1.4.2 Installer's Qualifications: Employ a firm having a minimum of 5 years successful experience in the application of the types of materials required.

1.4.3 Regulatory Requirements. The quantity of volatile organic compounds (VOC) used in sealants, primers and cleaners shall not exceed the limits permitted under the current regulations for architectural coatings of the South Coast Air Quality Management District.

1.5 DELIVERY, STORAGE, AND HANDLING:

1.5.1 Deliver sealants to the Project site in unopened containers, labeled with the manufacturer's name, brand designation, color, expiration period for use, pot life, curing time, and mixing instructions for multicomponent materials.

1.5.2 Store sealants in an area where they will not be subject to temperatures above 100 degrees F or below 40 degrees F. Do not store materials that have exceeded the manufacturer's recommended shelf life.

1.6 PROJECT CONDITIONS:

Do not apply sealants when the ambient temperature is above 100 degrees F or below 40 degrees F, when the weather is foggy, or rainy, or when joint substrates are wet.

1.7 WARRANTY:

In addition to the warranty and correction of work requirements of the General Conditions, warrant work under this section against moisture penetration for a period of 5 years from the date of "Notice of Completion". The written warranty shall include materials and labor required to repair leaks that develop. The warranty shall be signed by the sealant manufacturer, the sealant installer and the Contractor and shall be submitted in accordance with Division 1.

PART 2 - PRODUCTS

2.1 SEALANT MATERIALS:

2.1.1 Type A Sealant: Multiple component, self-leveling polyurethane based sealant meeting the requirements of ASTM C 920, Type M, Grade P, Class 25. Acceptable products or equal:

Mameco International; Vulkem 245
Pecora Corp.; Urexpan NR-200
L.M. Scofield Co.; Lithoseal Buildingcalk-3S
Sika Corp.; Sikaflex-2c-SL
Sonneborn Building Products; Sonolastic SL 2

2.1.2 Type B Sealant: Single or multiple component, nonsag polyurethane based sealant meeting the requirements of ASTM C 920, Type S or M, Grade NS, Class 25. Do not use single component sealants when excessive movement is expected within the curing time of the sealant. Acceptable products or equal:

Mameco International; Vulkem 116 or 227
Pecora Corp.; Dynatrol I or II
Sika Corp; Sikaflex 1a or 2c-NS
Sonneborn Building Products; Sonolastic NP 1 or NP 2
Tremco; Dymonic or Dymeric

2.1.3 Type C Sealant: Butyl rubber based sealant meeting the requirements of ASTM C 920, Type S, Grade NS, Class 7.5. Acceptable products or equal:

Adco Seal; No. B-100
Pecora Corp.; BC-158
PTI Sealants; PTI 757
Tremco; Butyl Sealant

2.1.4 Type D Sealant: Latex acrylic based sealant meeting the requirements of ASTM C 834. Acceptable products or equal:

Pecora Corp.; AC-20
Sonneborn Building Products; Sonolac
Tremco; Acrylic Latex 834

2.1.5 Type E Sealant: Not Used.

2.1.6 Type F Sealant: Narrow joint seam sealant meeting the requirements of AAMA 803.3 and formulated for sealing joints 3/16 inch or smaller in width. Type F Sealant is USDA Approved. Acceptable product or equal:

PTI Sealants; PTI 200

2.1.7 Type G Sealant: Not Used.

2.1.8 Acoustical Sealant: Sealant shall be one of the following types at the Contractor's option:

.1 Polyvinyl chloride foam tape with pressure sensitive tape on one side 3/4 inch wide by the thickness required to accommodate uneveness of substrates and completely

fill openings between partition framing and building floors and concrete or masonry wall. Acceptable products or equal:

Norton Co.; Norseal V730 Series
Arlon; Series 6A

.2 Permanently resilient compound manufactured specifically for acoustical applications. Acceptable products or equal:

Ohio Sealants; Sound Calk (solvent type)
Pecora Corp.; BA-98
Tremco; Acoustical Sealant

2.1.9 Colors: Provide sealant colors as follows:

Concrete flatwork - to match concrete.
Concrete walls - to match concrete.
Masonry Walls - to match mortar color.
Ceramic tile - to match grout.
Other locations - to match color of adjacent surface.

2.2 MISCELLANEOUS MATERIALS:

2.2.1 Joint Filler: Preformed, compressible, resilient, nonstaining, polyurethane, open or closed cell nonoutgassing foam, round in shape, with diameter never less than 30 percent greater than width of joint. Sealant manufacturer shall guarantee filler as being suitable for its intended use and entirely compatible with the sealant.

2.2.2 Primer: Product of manufacturer of sealant used.

2.2.3 Lacquer Sealer: Clear, as recommended by sealant manufacturer.

2.2.4 Bond Breaker Tape: Polyethylene tape or other tape as recommended by the sealant manufacturer. Provide self-adhesive tape wherever applicable.

PART 3 - EXECUTION

3.1 EXAMINATION:

Examine the joint surfaces, backing, and anchorages of units forming sealant rabbet, and the conditions under which the sealant work is to be performed for conditions that would adversely affect the performance of the sealant. Do not proceed with the sealant work until unsatisfactory conditions have been corrected. Start of sealant work constitutes acceptance of conditions.

3.2 PREPARATION:

3.2.1 Surface Cleaning of Joints: Completely clean joints and spaces to be sealed of all dirt, dust, mortar, oil, and other foreign materials which might adversely affect the joint sealing work. Where necessary, degrease with an approved solvent or commercial degreasing agent. Dry surfaces thoroughly before application of sealants.

.1 If recommended by manufacturer, remove paint and other protective coatings from surfaces to be sealed before priming and sealant application.

.2 Prepare surfaces to receive sealant to conform to the sealant manufacturer's specifications. Use air pressure or other approved methods to achieve required results. Use masking tape to keep sealants off surfaces that will be exposed in the finished work.

3.2.2 Joint Priming: Prime joint substrates where indicated or where recommended by joint sealant manufacturer. Apply primer to comply with joint sealant manufacturer's recommendations. Confine primers to areas of joint sealant bond; do not allow spillage or migration onto adjoining surfaces.

3.3 JOINT DIMENSIONS:

3.3.1 Butyl Base Type Sealant: Minimum joint width of 1/4 inch, and the depth of 3 times the width of the joint, with the maximum depth 3/4 inch.

3.3.2 Silicone Rubber Sealant: Minimum joint width of 1/4 inch, and depth of approximately one-half the width, but in no case less than 1/4 inch. Other width-to-depth ratios as follows:

JOINT WIDTH:	JOINT DEPTH:	
For Nonporous Surfaces:	Minimum	Maximum
1/4" (minimum)	1/4"	1/4"
1/4" to 1/2"	1/2 of width	Equal to width
Over 1/2"	Not Permitted	
For Porous Surfaces		
1/4" (minimum)	1/4"	1/4"
1/4" to 1/2"	1/4"	Equal to width
1/2" to 1"	1/2"	Equal to width
Over 1"	Not Permitted	

3.3.3 Acrylic and Polyurethane: Minimum joint width of 1/4 inch, and depth equal to width, but in no case deeper than 1/2 inch. Other width-to-depth ratios as follows:

JOINT WIDTH:	JOINT DEPTH:	
For Nonporous Surfaces:	Minimum	Maximum
1/4" (minimum)	1/4"	1/4"
1/4" to 1/2"	Equal to width	Equal to width
Over 1/2" to 1" maximum	1/2"	1/2"
For Porous Surfaces		
1/4" (minimum)	1/4"	1/4"
1/4" to 1/2"	1/4"	Equal to width
1/2" to 1"	1/2"	Equal to width
Over 1"	Not Permitted	

3.4 SEALANT APPLICATION SCHEDULE:

3.4.1 Type A Sealant: Use for all joints in exterior and interior concrete, and ceramic tile floors and paved surfaces subject to foot traffic.

3.4.2 Type B Sealant: Use for all vertical joints in masonry, plaster, and concrete, exposed on the exterior of the building and for sealing around metal door, window and louver frames penetrating these surfaces.

3.4.3 Type C Sealant: Use for interior wall penetrations for pipe or conduit that will be concealed by escutcheons or other trim or plates and for lap joints in sheet metal work.

3.4.4 Type D Sealant: Use for joints, voids, and penetrations in interior surfaces exposed to view and requiring painting.

3.4.5 Type E Sealant: Not Used.

3.4.6 Type F Sealant: Use for all narrow joints in aluminum storefront and curtain wall framing where joints are mechanically restricted from movement. Type F Sealant is USDA Approved.

3.4.7 Type G Sealant: Not Used.

3.4.8 Acoustical Sealant: Use to seal all perimeter joints around sound retardant partitions and around electrical boxes and other penetrations in these partitions.

3.5 APPLICATION:

3.5.1 Installation of Sealant Filler: Install sealant fillers to provide support for sealants during application and at position required to produce the cross-sectional shapes and depths of installed sealants relative to joint widths as specified herein and to allow optimum sealant movement capability.

.1 Do not leave gaps between ends of joint filler.

.2 Do not stretch, twist, puncture, or tear joint fillers.

.3 Remove absorbent joint fillers that have become wet before sealant application and replace with dry material.

.4 Install bond breaker tape between sealants where backer rods are not used between sealants and joint fillers or back of joints.

3.5.2 Install sealants in compliance with the details, square and perpendicular to the adjoining surfaces. Rounded off finishing will not be allowed.

3.5.3 Seal around all openings in exterior walls, and other locations indicated or required for waterproofing the building(s). Seal all other joints as herein specified, indicated, and required to properly complete the building(s).

3.5.4 Apply sealants using specified materials and proper tools. Prepare surfaces (cleaning, etc.) and apply sealant as specified herein and in accordance with the manufacturer's printed instruction and recommendations.

3.5.5 Do not use sealants when they become too jelled to be discharged in a continuous flow from the gun. Modification of sealants by addition of liquids, solvents, or powders will not be permitted.

3.5.6 Apply sealants with guns having proper size nozzles. Use sufficient pressure to fill all voids and joints solid. In sealing around openings, include entire perimeter of each opening, unless indicated or specified otherwise. Where the use of the gun is impracticable, use suitable hand tools.

3.5.7 Neatly point sealed joints on flush surfaces with beading tool, and internal corners with eaving tool. Remove excess material. Sealant, where exposed, shall be free of wrinkles and uniformly smooth. Complete sealing before final coats of paint are applied.

3.6 MISCELLANEOUS JOINT SEALING WORK:

The entire extent of sealing work is not necessarily fully or individually described herein. Provide sealing wherever required to prevent light leakage as well as moisture leakage. Refer to drawings for conditions and related parts of the work.

3.7 CLEANING:

Clean all types of surfaces materials adjoining sealed joints of smears of sealant or other soiling due to sealant application.

END OF SECTION

34-003 – 01/09/2014

SECTION 08110

STEEL DOORS AND FRAMES

PART 1 - GENERAL

1.1 SUMMARY:

1.1.1 Section Includes: Steel doors and pressed steel frames for steel doors, and exterior windows.

1.1.2 Related Documents: The Conditions of the Contract and Division 1 apply to this section as fully as if repeated herein.

1.2 REFERENCE STANDARDS:

The editions of the specifications and standards referenced herein, published by the following organizations, apply to the work only to the extent specified by the references. Refer to Section 01422 for information concerning availability and use of references.

American National Standards Institute (ANSI)
American Society for Testing and Materials (ASTM)
National Fire Protection Association (NFPA)
National Association of Architectural Metal Manufacturers (NAAMM)
Steel Door Institute (SDI)

1.3 SUBMITTALS:

1.3.1 Shop Drawings: Submit shop drawings showing fabrication and installation of steel doors and frames. Include details of each frame type, elevations of door design types, conditions at each wall opening condition, details of construction, location and installation requirements of door and frame hardware and reinforcements, details of joints and connections, coordination of glazing frames and doors. Show anchorage and accessory items.

.1 Provide schedule of doors and frames using same reference numbers for details and openings as those indicated on drawings.

.2 Indicate coordination of glazing frames and stops with glass and glazing requirements.

1.3.2 Product Data: For each type of door and frame indicated, include door designation, type, material description, core description, construction details, label compliance, sound and fire-resistance ratings, and finishes.

1.3.3 Templates: Secure templates from finish hardware supplier for specified hardware and mounting locations.

1.3.4 Oversize Construction Certificates: Submit for door assemblies required to be fire-protection rated and exceeding size limitations of labeled assemblies.

1.3.5 Submittal procedures and quantities are specified in Section 01334.

1.4 QUALITY ASSURANCE:

1.4.1 Provide doors and frames meeting the requirements of either ANSI/SDI-100-91 or NAAMM HMMA 861 for stock sizes and designs; and NAAMM HMMA 861 for nonstock sizes or designs.

1.4.2 Fire-Rated Door Assemblies: Meet the requirements of the 2010 California Building Code (CBC) Title 24 Part 2, Chapter 7 - Fire-Resistant Materials and Construction for the fire resistive ratings indicated, and which are labeled by Underwriters' Laboratories, Factory Mutual, or other testing agency acceptable to the local Building Official.

.1 Temperature Rise Rating: At exit stairwell enclosures, exit passageways, and horizontal exits, provide doors which are labeled for a maximum transmitted temperature end point not to exceed 450 degrees above ambient at the end of 30 minutes of fire exposure.

.2 Oversize Fire-Rated Door Assemblies: For units exceeding sizes of tested assemblies, provide certification by a testing agency acceptable to the local Building Official that doors comply with standard construction requirements for tested and labeled fire-rated door assemblies except for size.

1.5 DELIVERY, STORAGE, AND HANDLING:

1.5.1 Delivery: Provide packaging such as cardboard or other containers to protect surfaces of hollow metal doors. Strap welded frames together in pairs with head of one unit inverted or provide temporary spreaders fastened to the bottom of each frame.

1.5.2 Storage: Store doors and frames on platforms under cover. Store doors and frames in dry storage spaces, with adequate ventilation, free from dust, and which permits easy access for inspection and handling. Avoid using nonvented plastic or canvas shelters that create a humidity chamber. If the wrapper on the door becomes wet, remove the wrapper immediately. To promote air circulation, provide a 1/4 inch space between doors. Mark or tag each door and frame with the appropriate opening identification symbol.

PART 2 - PRODUCTS

2.1 MANUFACTURERS:

2.1.1 Manufacturers: Subject to compliance with requirements, provide products by one of the following:

Ceco Corp.
Door Components, Inc.
Steelcraft Manufacturing Co.

2.2 MATERIALS:

2.2.1 Cold Rolled Steel Sheets: ASTM A 366, stretcher leveled.

2.2.2 Hot Rolled Steel Sheets: ASTM A 569, pickled and oiled.

2.2.3 Hot-dip Galvanized Steel Sheets: ASTM A 653, coating designation A60 or G60, mill phosphatized. Thicknesses specified include galvanizing.

2.2.4 Polystyrene Core Material: SDI-100-91, para. 2.2.3.2.

2.2.5 Mineral Fiberboard Core Material: SDI-100-91, para. 2.2.3.2.

2.3 FLUSH DOOR CONSTRUCTION:

2.3.1 General: Fabricate doors of stock sizes and designs in accordance with either SDI-100-91 or NAAMM HMMA 861. Fabricate doors of nonstock sizes or designs in accordance with NAAMM HMMA 861.

2.3.2 Door Faces:

.1 Fabricate exterior doors with 0.064 inch (16 gage) A60 galvanized cold-rolled steel faces, seamless design with no seams in faces and all edge seams continuously welded, filled and ground smooth.

.2 Fabricate interior doors with 0.0478 inch (18 gage) A60 Galvanized steel faces, seamless design with no seams in faces and all edge seams continuously welded, filled and ground smooth.

2.3.3 Internal Construction: Fabricate doors with any of the internal construction methods specified herein and in accordance with SDI-100-91 or NAAMM HMMA 861 except as specified below:

.1 Fire Rated Doors: Fabricate to the requirements of NFPA 252-95 for the hourly rates indicated. Fabricate labeled fire resistive doors at rated wall assembly

locations as indicated on Drawings with mineral fiberboard composite core that will provide the specified maximum transmitted temperature end point.

.2 Acoustical Doors: Fabricate with core material selected by the manufacturer to obtain a STC rating of not less than 42 when provided with sound seals and drop bottom specified in Section 08710 and tested in accordance with ASTM E 90 and E 413.

.3 Insulated Exterior Doors: Fabricate with or polystyrene core material to provide an apparent U-value of not more than 0.09 when tested in accordance with SDI 113-79.

.4 Oversized Labeled Fire Doors: Fabricate doors up to maximum size of 5'-0" x 12'-0" singles and 10'-0" x 12'-0" pairs. Fabricate to the requirements of NFPA 252-95 for the hourly rates indicated. Fabricate labeled fire resistive doors at rated wall assembly locations as indicated on Drawings with mineral fiberboard composite core that will provide the specified maximum transmitted temperature end point. Fabricate with vertical steel stiffeners.

2.4 FRAME FABRICATION:

2.4.1 Fabricate frames in accordance with SDI-100-91 or NAAMM HMMA 861 except as modified herein. Provide metal frames for doors, transoms, and other openings, of types and styles indicated and scheduled. Conceal fastenings, unless otherwise indicated.

.1 Fabricate frames for exterior doors of 0.0747 inch (14 gage) hot-rolled or cold-rolled sheet steel. Face weld corners and grind welds smooth. Provide stops a minimum of 5/8 inch deep.

.3 Fabricate frames for all other doors of 0.0598 inch (16 gage) hot-rolled or cold-rolled steel sheet. Provide with corners of face welded type.

2.4.2 Anchors: Provide one floor anchor and the number of wall anchors listed below, welded into each jamb member. Wall anchors shall comply with SDI 111, of type indicated for the specific wall condition and of same material specified for frames. Provide head anchors welded into head member as recommended by the frame manufacturer. All anchors shall be 0.064 inch (16 gage) minimum for galvanized frames and 0.0589 (16 gage) minimum for cold or hot rolled steel frames. Provide "Z" spacer type anchors for all wood studs.

Wall Material	Door Height	No. of Anchors
Concrete, Masonry and wood studs	Up to 7'-0"	3
	7'-2" to 9'-6"	4
Steel Studs	Up to 7'-0"	4
	7'-2" to 9'-6"	5

2.4.3 Mullions and Transom Bars: Provide closed or tubular mullions and transom bars where indicated. Fasten mullions and transom bars at crossings and to jambs by butt welding. Reinforce joints between frame members with concealed clip angles or sleeves of same metal and thickness as frame.

2.5 HARDWARE PREPARATION:

Reinforce doors and frames for hardware in accordance with SDI-100-91 or NAAMM HMMA 861 as applicable, except provide 8 gage minimum hinge reinforcement for exterior doors.

2.6 CLEARANCES:

Provide doors and frames with clearances in accordance with SDI-100-91 or NAAMM HMMA 861.

2.7 FINISH:

2.7.1 Factory Primer: After fabrication, clean, phosphate treat, and dip or spray coat all exposed surfaces of doors and frames with a rust-inhibitive primer complying with ANSI A 224.1-1987.

2.7.2 Field Finish: Field finish painting is specified in Section 09960 High-Performance Coatings.

PART 3 - EXECUTION

3.1 INSTALLATION:

3.1.1 Set frames accurately in position and plumb, align, and brace them securely until permanent anchors are set. Anchor the bottom of frames securely to floors with expansion bolts or with powder-driven fasteners. Build in or secure wall anchors to adjoining construction as indicated or required by adjoining construction. Where frames require ceiling struts or other structural overhead bracing, anchor such struts securely to structure above, as required. Fill frames solid with portland cement grout where indicated or required by fire rating of opening.

3.1.2 Hang doors to fit snug against stops, free from hinge bind, and with uniform clearance of 3/32 inch at heads and jambs. After hanging, make all adjustments and then remove lockset hardware for finish painting. Reinstall hardware after finish painting.

3.1.3 Install fire rated doors and frames, including hardware and operational characteristics, in accordance with the requirements of the listing agency.

END OF SECTION

34-003 – 01/27/2014

SECTION 08312

ACCESS PANELS

PART 1 - GENERAL

1.1 SUMMARY:

1.1.1 Section Includes: Wall and ceiling access panels.

1.1.2 Related Documents: The Conditions of the Contract and Division 1 apply to this section as fully as if repeated herein.

1.2 SUBMITTALS:

1.2.1 Shop Drawings: Submit shop drawings showing location of all access panels.

1.2.2 Product Data: Submit catalog cuts or other data indicating details of construction of panels, gages of metal, hardware, label compliance, and specifications for shop priming.

1.2.3 Submittal procedures and quantities are specified in Division 1.

1.3 REGULATORY REQUIREMENTS:

1.3.1 Labeled fire resistive access panels shall conform to the California Code of Regulations (CCR) Title 24 Part 2, California Building Code, Chapter 7, Fire-Resistant Materials and Construction, for the fire resistive ratings indicated. Fire resistive access panels shall bear the label of Underwriters' Laboratories, Warnock Hersey, or other testing agency acceptable to the local building official.

1.4 DELIVERY, STORAGE, AND HANDLING:

Provide packaging such as cardboard or other containers to protect access panels during delivery and storage. Store access panels elevated off the floor in a dry weather tight enclosure. Provide adequate ventilation to avoid condensation. If the container becomes wet remove the panel from the container immediately.

PART 2 - PRODUCTS

2.1 FIRE RESISTANT WALL AND CEILING ACCESS PANELS:

2.1.1 Fire Rated Wall and Ceiling Access Panels: Acceptable products or equal:

Cesco Products; Style FB
Larsen's Manufacturing Company; L-FRAP
Milcor, Inc.; 3208 Series

Nystrom, Inc.; FR Series

.1 Frame and Panel Assembly: Bear the Underwriters' Laboratories, Inc. label for 1-1/2 hour B label, 250 degrees maximum 30 minute temperature rise.

.2 Frames: 16 gage steel.

.3 Panels: 20 gage steel sandwich type equipped with an automatic closing mechanism.

.4 Lock Assembly: Self-latching type with key operated cylinder lock and a mechanism to release the latch bolt from the inside. Furnish 2 keys per lock and key all locks alike.

.5 Hinges: Continuous type, steel with stainless steel pins.

.6 Finish: Factory applied baked enamel over a protective phosphate coating.

2.2 NON-RATED WALL AND CEILING ACCESS PANELS:

2.2.1 Panels Mounted in Gypsum Board: Acceptable products or equal:

Cesco Products; Style SR-III
Larsen's Manufacturing Company; L-DWC
Milcor, Inc.; Style DW
Nystrom, Inc.; WB Series

.1 Frames: 16 gage steel with 26 gage galvanized steel casing bead surrounding the frame or 0.060 inch extruded aluminum.

.2 Panel: 14 gage steel.

.3 Hinges: Concealed spring hinges or concealed piano hinges, opening to 175 degrees.

.4 Locks: Flush, key operated cylinder lock. Furnish 2 keys per lock and key all locks alike.

.5 Finish: Factory applied baked enamel prime coat over a protective phosphate coating on steel.

2.2.2 Panels Mounted in Plaster: Acceptable products or equal:

Cesco Products; Style PX
Larsen's Manufacturing Company; L-PSW
Milcor, Inc.; Style K
Nystrom, Inc.; PW Series

.1 Frames: 16 gage steel with 22 gage galvanized steel casing bead or 0.060 inch extruded aluminum with expanded metal flange surrounding the frame.

.2 Panel: 14 gage steel.

.3 Hinges: Concealed spring hinges or concealed piano hinges, opening to 175 degrees.

.4 Locks: Flush, key operated cylinder lock. Furnish 2 keys per lock and key all locks alike.

.5 Finish: Factory applied baked enamel prime coat over a protective phosphate coating on steel.

PART 3 - EXECUTION

3.1 INSTALLATION:

3.1.1 Provide access panels where indicated and where required to provide access to valves, flow indicators, dampers and equipment concealed with walls or chases or above ceilings.

3.1.2 Install access panels in accordance with the drawings and the manufacturer's directions.

3.1.3 Set frames accurately in position and attach securely to supports with plane of face panels aligned with adjacent finished surfaces.

3.1.4 Install concealed-frame access panels flush with adjacent finish surfaces.

END OF SECTION

34-003 – 01/27/2014

SECTION 08710

DOOR HARDWARE

PART 1 - GENERAL

1.1 SUMMARY

A. Section Includes**:**

1. Door hardware
2. Cylinders for doors fabricated with locking hardware.

B. Related Divisions**:**

1. Division 07900 – Joint Sealers
2. Division 08100 - Metal Doors & Frames

1.2 REFERENCES**:**

A. Use date of standard in effect as of Bid date.

1. American National Standards Institute – ANSI 156.18 – Materials and Finishes.
   a) ANSI A156.18 Materials and Finishes
2. BHMA – Builders Hardware Manufacturers Association
3. DHI – Door and Hardware Institute
4. NFPA – National Fire Protection Association
   a) NFPA 80 – Fire Doors and Windows
   b) NFPA 105 – Smoke and Draft Control Door Assemblies
   c) NFPA 252 – Fire Tests of Door Assemblies
5. UL – Underwriters Laboratories
   a) UL10C – Positive Pressure Fire Tests of Door Assemblies.
   b) UL 305 – Panic Hardware
6. WHI – Warnock Hersey Incorporated State of California Building Code
7. Local applicable codes
8. SDI – Steel Door Institute
9. WI – Woodwork Institute
10. AWI – Architectural Woodwork Institute
11. NAAMM – National Association of Architectural Metal Manufacturers

B. Abbreviations

1. Manufacturers**:** see table at 2.1.A of this section
2. Finishes**:** see 2.7 of this section.

1.3 SUBMITTALS & SUBSTITUTIONS

A. Substitutions per Division 1. Include product data and indicate benefit to the Project. Furnish operating samples on request.

1.4 QUALITY ASSURANCE**:**

A. Qualifications**:**

1. Hardware supplier**:** direct factory contract supplier who employs a certified architectural hardware consultant (AHC), available at reasonable times during course of work for project hardware consultation to Owner, Architect and Contractor.

a) Responsible for detailing, scheduling and ordering of finish hardware. Detailing implies that the submitted schedule of hardware is correct and complete for the intended function and performance of the openings.

B. Hardware**:** Free of defects, blemishes and excessive play. Obtain each kind of hardware (latch and locksets, exit devices, hinges and closers) from one manufacturer.

C. Exit Doors**:** Operable from inside with single motion without the use of a key or special knowledge or effort.

D. Fire-Rated Openings**:** NFPA 80 compliant. Hardware UL10C / UBC Standard 7-2 (positive pressure) compliant for given type/size opening and degree of label. Provide proper latching hardware, non-flaming door closers, approved-bearing hinges, and resilient seals. Coordinate with wood door section for required intumescent seals. Furnish openings complete.

E. Furnish hardware items required to complete the work in accordance with specified performance level and design intent, complying with manufacturers' instructions and code requirements.

1.5 DELIVERY, STORAGE AND HANDLING**:**

A. Delivery**:** coordinate delivery to appropriate locations (shop or field).

1. Permanent keys and cores**:** secured delivery direct to Owner's representative.

B. Acceptance at Site**:** Items individually packaged in manufacturers' original containers, complete with proper fasteners and related pieces. Clearly mark packages to indicate contents, locations in hardware schedule and door numbers.

C. Storage**:** Provide securely locked storage area for hardware, protect from moisture, sunlight, paint, chemicals, dust, excessive heat and cold, etc.

1.6 PROJECT CONDITIONS AND COORDINATION**:**

A. Where exact types of hardware specified are not adaptable to finished shape or size of members requiring hardware, provide suitable types having as nearly as practical the same operation and quality as type specified, subject to Architect's approval.

B. Coordination**:** Coordinate hardware with other work. Furnish hardware items of proper design for use on doors and frames of the thickness, profile, swing, security and similar requirements indicated, as necessary for proper installation and function, regardless of omissions or conflicts in the information on the Contract Documents. Furnish related trades with the following information**:**

1. Location of embedded and attached items to concrete.
2. Location of wall-mounted hardware, including wall stops.
3. Location of finish floor materials and floor-mounted hardware.
4. At masonry construction, coordinate with the anchoring and hollow metal supplier prior to frame installation by placing a strip of insulation, wood, or foam, on the back of the hollow metal frame behind the rabbet section for continuous hinges, as well as at rim panic hardware strike locations, silencers, coordinators, and door closer arm locations. When the frame is grouted in place, the backing will allow drilling and tapping without dulling or breaking the installer's bits.
5. Locations for conduit and raceways as needed for electrical, electronic and electro-pneumatic hardware items. Fire/life-safety system interfacing. Point-to-point wiring diagrams plus riser diagrams to related trades.
6. Coordinate: flush top rails of doors at outswinging exteriors, and throughout where adhesive-mounted seals occur.
7. Manufacturers' templates to door and frame fabricators.

C. Check Shop Drawings for doors and entrances to confirm that adequate provisions will be made for proper hardware installation.

D. Environmental considerations**:** segregate unused recyclable paper and paper product packaging, uninstalled metals, and plastics, and have these sent to a recycling center.

1.7 WARRANTY**:**

A. Part of respective manufacturers' regular terms of sale. Provide manufacturers' written warranties**:**

1.	Locksets**:**	Three years
2.	Exit Devices**:**	Three years mechanical One year electrical
3.	Closers**:**	Ten years mechanical Two years electrical
4.	Hinges**:**	One year
5.	Other Hardware	Two years

1.8 REGULATORY REQUIREMENTS Locate latching hardware between 34 inches to 44 inches above the finished floor, per California Building Code, Section 1008.1.9.2Locate panic hardware between 36 inches to 44 inches above the finished floor.

B. Handles, pull, latches, locks, other operating devices**:** readily openable from egress side without tight grasping, tight pinching, or twisting of the wrist to operate.

C. Adjust doors to open with not more than 5.0-pounds pressure to open at exterior doors and 5.0-pounds at interior doors. As allowed per California Building Code, local authority may increase the allowable pressure for fire doors to achieve positive latching, but not to exceed 15-pounds.

1. Door latch shall release when subjected to a 15-pound force.
2. Door shall be set in motion when subjected to a 30-pound force.
3. Once set in motion, door shall swing to a full-open position when subjected to a 5-pound force.

D. Adjust door closer sweep periods so that from an open position of 70 degrees, the door will take at least 3 seconds to move to a point 3 inches from the latch, measured to the landing side of the door.

E. Smooth surfaces at bottom 10 inches of push sides of doors, facilitating push-open with wheelchair footrests.

F. Door opening clear width no less than 32 inches, measured from face of frame stop, or edge of inactive leaf of pair of doors, to door face with door opened to 90 degrees. Hardware projection not a factor in clear width if located above 30 inches and the hardware projects no more than 4 inches.

G. Door opening clear height no less than 80 inches measured from top of sill to bottom of frame header stop. Projections into clear opening height not to exceed 4 inches.

H. Thresholds**:** floor or landing no more than 0.50 inches below the top of the threshold of the doorway. Change in level between 0.25 inches and 0.50 inches**:** beveled to slope no greater than 1**:**2 (50 percent slope).

I. Floor stops**:** Do not locate in path of travel. Locate no more than 4 inches from walls.

J. Pairs of doors**:** limit swing of inactive leaf to 90 degrees to protect persons reading wall-mounted tactile signage unless otherwise indicated on Drawings.

K. Door and door hardware encroachment**:** when door is swung fully-open into means-of-egress path, the door, including the hardware, may not encroach/project more than 7 inches into the required exit width. California Building Code 1005.2 and 1005.3.

PART 2 PRODUCTS

2.1 MANUFACTURERS:

A.

ITEM:	MANUFACTURER:
Hinges	(IVE) Ives
Continuous Hinges	(IVE) Ives
Key System	(FAL) Falcon
Mechanical Locks	(SCH) Schlage
Closers	(LCN) LCN
Silencers	(IVE) Ives
Push & Pull Plates	(IVE) Ives
Kickplates	(IVE) Ives
Thresholds	(NGP) NGP
Seals & Bottoms	(NGP) NGP & (DHS) Door Hardware Systems, Inc.

A. Manufacturers and their abbreviations used in this schedule:

ADA	Adams Rite
DHS	Door Hardware Systems, Inc.
FAL	Falcon
LCN	LCN Closers
NGP	National Guard Products
SCH	Schlage Lock
TRI	Trimco
VON	Von Duprin

2.2 HINGING METHODS:

A. Drawings typically depict doors at 90 degrees, doors will actually swing to maximum allowable. Use wide-throw conventional or continuous hinges as needed up to 8 inches in width to allow door to stand parallel to wall for true 180-degree opening. Advise architect if 8-inch width is insufficient.

B. Conform to manufacturer's published hinge selection standard for door dimensions, weight and frequency, and to hinge selection as scheduled. Where manufacturer's standard exceeds the scheduled product, furnish the heavier of the two choices, notify Architect of deviation from scheduled hardware.

C. Continuous Hinges:

1. Geared-type aluminum.

   a) Use wide-throw units where needed for maximum degree of swing, advise architect if commonly available hinges are insufficient.

2.3 CLOSERS

A. Surface Closers: LCN 4000 series

1. Full rack-and-pinion type cylinder with removable non-ferrous cover and cast iron body. Double heat-treated pinion shaft, single piece forged piston, chrome-silicon steel spring.
1. ISO 2000 certified. Units stamped with date-of-manufacture code.
2. Independent lab-tested 10,000,000 cycles.
3. Non-sized, non-handed, and adjustable. Place closer inside building, stairs, and rooms.
4. Plates, brackets and special templating when needed for interface with particular header, door and wall conditions and neighboring hardware.
5. Adjustable to open with not more than 5.0-pounds pressure to open at exterior doors and 5.0-pounds at interior doors. As allowed per California Building Code, Section 1133B.2.5 and 1008.1.3, local authority may increase the allowable pressure for fire doors to achieve positive latching, but not to exceed 15-pounds.
6. Separate adjusting valves for closing speed, latching speed and backcheck, fourth valve for delayed action where scheduled.
7. Extra-duty arms (EDA) at exterior doors scheduled with parallel arm units.
8. Exterior door closers**:** tested to 100 hours of ASTM B117 salt spray test, furnish data on request.
9. Exterior doors**:** seasonal adjustments not required for temperatures from 120 degrees F to -30 degrees F, furnish checking fluid data on request.
10. Non-flaming fluid, will not fuel door or floor covering fires.
11. Pressure Relief Valves (PRV) not permitted.

2.4 EXIT DEVICES/PANIC HARDWARE

A. General features:

1. Independent lab-tested.
2. Full style push pad design. No exposed cross bar fasteners, no exposed cavities when operated.

B. Specific features:

1. Non-Fire Rated Devices: Keyed cylinder dogging
2. Lever Trim and Pull Trim: Satin stainless escutcheon min .130” thickness Von Duprin 16 Lever and Ives VR900 Pull.

2.5 OTHER HARDWARE

A. Automatic Flush Bolts**:** Low operating force design.

B. Overhead Stops**:** Non-plastic mechanisms and finished metal end caps. Field-changeable hold-open, friction and stop-only functions.

C. Kick Plates**:** Four beveled edges, .050 inches minimum thickness, height and width as scheduled. Sheet-metal screws of satin stainless steel or to match other hardware.

D. Door Stops**:** Provide stops to protect walls, casework or other hardware.

E. Sound-reducing adjustable seals: coordinate lockset backsets, rim exit device strikes, and parallel arm closers.

F. Automatic door bottoms**:** low operating force units. Doors with automatic door bottoms plus head and jamb seals cannot require more than two pounds operating force to open when closer is disconnected.

G. Thresholds**:** As scheduled and per details. Comply with CBC Section 1133B.2.4.1. Substitute products**:** certify that the products equal or exceed specified material's thickness. Proposed substitutions**:** submit for approval.

1. Saddle thresholds**:** 0.125 inches minimum thickness.
2. Exteriors**:** Seal perimeter to exclude water and vermin. Use sealant complying with requirements in Division 7 "Thermal and Moisture Protection". Minimum 0.25 inch diameter fasteners and lead expansion shield anchors, or Red-Head #SFS-1420 (or approved equivalent) Flat Head Sleeve Anchors (SS/FHSL).
3. Fire-rated openings, 90-minutes or less duration**:** use thresholds to interrupt floor covering material under the door where that material has a critical radiant flux value less than 0.22 watts per square centimeter, per NFPA 253. Use threshold unit as scheduled. If none scheduled, request direction from Architect.
4. Plastic plugs with wood or sheet metal screws are not an acceptable substitute for specified fastening methods.
5. Fasteners**:** Generally, exposed screws to be Phillips or Robertson drive. Pinned TORX drive at high security areas. Flat head sleeve anchors (FHSL) may be slotted drive. Sheet metal and wood screws**:** full-thread. Sleeve nuts**:** full length to prevent door compression.

H. Through-bolts**:** Do not use. Coordinate with metal doors and frames; ensure provision of proper reinforcement to support machine screws for mounting panic hardware and door closers.

1. Exception**:** surface-mounted overhead stops, holders, and friction stays.

I. Silencers**:** Interior hollow metal frames, 3 for single doors, 4 for pairs of doors. Leave no unfilled/uncovered pre-punched silencer holes. Intent**:** door bears against silencers, seals make minimal contact with minimal compression – only enough to effect a seal.

2.6 FINISH**:**

A. Generally**:** BHMA 630 Satin Stainless Steel.

1. Areas using BHMA 626: furnish push-plates, pulls and protection plates of BHMA 630, Satin Stainless Steel, unless otherwise scheduled.

B. Door closers**:** factory powder coated to match other hardware, unless otherwise noted.

C. Finish designators used in appended hardware schedule**:**

2.7 KEYING REQUIREMENTS**:**

Key System**:** Falcon G keyway, interchangeable core throughout. Key blanks available only from factory-direct sources, not available from after-market keyblank manufacturers. For estimate use factory GMK charge. Initiate and conduct meeting(s) with Owner and hardware representatives to determine system keyway(s), keybow styles, structure, stamping, degree of physical security and degree of geographic exclusivity. Furnish Owner's written approval of the system. Existing factory-registered master key system.

2. Construction keying**:** furnish temporary keyed-alike cores. Remove at substantial completion and install permanent cylinders/cores in Owner's presence. Demonstrate that construction key no longer operates.
3. Temporary cylinders/cores remain supplier's property.
4. Key Cylinders**:** furnish 6-pin solid brass construction.

D. Cylinders/cores**:** keyed at factory of lock manufacturer where permanent records are maintained. Locksets and cylinders same manufacturer.

E. Permanent keys**:** use secured shipment direct from point of origination to Owner.

1. For estimate**:** 4 keys per change combination, 2 master keys per group, 2 grand-master keys, 2 control keys. Determine actual requirement in keying meeting.

F. Bitting List**:** use secured shipment direct from point of origination to Owner at completion.

PART 3 - EXECUTION

3.1 ACCEPTABLE INSTALLERS**:**

A. Can read and understand manufacturers' templates, suppliers' hardware schedule and printed installation instructions. Can readily distinguish drywall screws from manufacturers' furnished fasteners. Available to meet with manufacturers' representatives and related trades to discuss installation of hardware.

3.2 PREPARATION**:**

A. Ensure that walls and frames are square and plumb before hardware installation. Make corrections before commencing hardware installation. Installation denotes acceptance of wall/frame condition.

B. Locate hardware per SDI-100 and applicable building, fire, life-safety, accessibility, and security codes.

1. Notify Architect of code conflicts before ordering material.
1. Locate latching hardware between 34 inches to 44 inches above the finished floor, per California Building Code, Section 1008.1.9.2 and 1133B.2.5.2.

2. Locate panic hardware between 36 inches to 44 inches above the finished floor.
3. Where new hardware is to be installed near existing doors/hardware scheduled to remain, match locations of existing hardware.

C. Overhead stops**:** before installing, determine proposed locations of furniture items, fixtures, and other items to be protected by the overhead stop's action.

3.3 INSTALLATION

A. Install hardware per manufacturer's instructions and recommendations. Do not install surface-mounted items until finishes have been completed on substrate. Set units level, plumb and true to line and location. Adjust and reinforce attachment substrate for proper installation and operation. Remove and reinstall or replace work deemed defective by Architect.

1. Gaskets**:** install jamb-applied gaskets before closers, overhead stops, rim strikes, etc; fasten hardware over and through these seals. Install sweeps across bottoms of doors before astragals, cope sweeps around bottom pivots, trim astragals to tops of sweeps.
2. When hardware is to be attached to existing metal surface and insufficient reinforcement exists, use RivNuts, NutSerts or similar anchoring device for screws.
3. Use manufacturers' fasteners furnished with hardware items, or submit Request for Substitution with Architect.
4. Replace fasteners damaged by power-driven tools.

B. Locate floor stops no more that 4 inches from walls and not within paths of travel. See paragraph 2.2 regarding hinge widths, door should be well clear of point of wall reveal. Point of door contact no closer to the hinge edge than half the door width. Where situation is questionable or difficult, contact Architect for direction.

C. Core concrete for exterior door stop anchors. Set anchors in approved non-shrink grout.

D. Locate overhead stops for minimum 90 degrees at rest and for maximum allowable degree of swing. Exception: center-pivoted stage wing panels.

E. Field-verify existing conditions and measurements prior to ordering hardware. Fill existing hardware cut outs not being used by the new hardware.

F. Where wall conditions will not allow door to swing using the scheduled hinges, provide wide-throw hinges and if needed, extended arms on closers.

G. Provide manufacturer's recommended brackets to accommodate the mounting of closers on doors with flush transoms.

3.4. ADJUSTING

A. Adjust and check for proper operation and function. Replace units, which cannot be adjusted to operate freely and smoothly.

1. Hardware damaged by improper installation or adjustment methods**:** repair or replace to Owner's satisfaction.
2. Adjust doors to fully latch with no more than 1 pound of pressure.

3. Adjust delayed-action closers on fire-rated doors to fully close from fully-opened position in no more than 10 seconds.
4. Adjust door closers per 1.9 this section.

B. Inspection of fire door assemblies and means-of-egress panic-hardware doors**:** Hire an independent third-party inspection service to prepare a report listing these doors, and include a statement that there are zero deficiencies with the fire-rated assemblies and the openings with panic hardware. Fire-rated doors**:**

5. Steel doors**:** adjust to 0.063 inches minimum to 0.188 inches maximum clearance at heads, jambs, and meeting stiles.
6. Adjust steel doors to 0.75 inches maximum clearance (undercut) above threshold or finish floor material under door.

C. Final inspection**:** Installer to provide letter to Owner that upon completion installer has visited the Project and has accomplished the following**:**

1. Has re-adjusted hardware.
2. Has evaluated maintenance procedures and recommend changes or additions, and instructed Owner's personnel.
3. Has identified items that have deteriorated or failed.
4. Has submitted written report identifying problems.

3.5 DEMONSTRATION**:**

A. Demonstrate mechanical hardware and electrical, electronic and pneumatic hardware systems, including adjustment and maintenance procedures.

3.6 PROTECTION/CLEANING**:**

A. Cover installed hardware, protect from paint, cleaning agents, weathering, carts/barrows, etc. Remove covering materials and clean hardware just prior to substantial completion.

B. Clean adjacent wall, frame and door surfaces soiled from installation / reinstallation process.

3.7 SCHEDULE OF FINISH HARDWARE

A. See door schedule in drawings for hardware set assignments.

SpeXtra: 94248-2

HwSet 01 - Chorus dressing rm

Qty		Description	Catalog Number	Finish	Mfr
1	EA	CONT. HINGE	224HD	628	IVE
1	EA	CLASSROOM LOCK	L9070HD OMEA	626	SCH
1	EA	SFIC PERMANENT CORE	C607 G keyway	626	FAL
1	EA	ARMOR COLLAR	A008794 SERIES	630	FAL
1	EA	SURFACE CLOSER	4041 DEL	689	LCN
1	EA	KICK PLATE	8400 10" X 1 1/2" LDW B4E	630	IVE
1	EA	MOP PLATE	8400 4" X 1" LDW B4E	630	IVE
1	EA	WALL STOP	WS406CVX	630	IVE
1	EA	DRIP CAP	16 4"MDW	628	NGP
1	SET	HEAD/JAMB SEAL	105-B + 105-3HJ-B	BLK	DHS
2	EA	CORNER SEAL	DP	BLK	DHS
1	EA	CNCLD BTM SWEEP	AMDB3-3 + CC (HM)		DHS
1	EA	SADDLE THRESHOLD	613 1/4-20-2	719	NGP

HwSet 02 - Principal's dressing rm

Qty		Description	Catalog Number	Finish	Mfr
1	EA	CONT. HINGE	224HD	628	IVE
1	EA	ENTRYLOCK+DEADBOLT	LV9456HD OMEA L583-363	626	SCH
1	EA	SFIC PERMANENT CORE	C607 G keyway	626	FAL
1	EA	ARMOR COLLAR	A008794 SERIES	630	FAL
1	EA	SURFACE CLOSER	4041 DEL	689	LCN
1	EA	KICK PLATE	8400 10" X 1 1/2" LDW B4E	630	IVE
1	EA	MOP PLATE	8400 4" X 1" LDW B4E	630	IVE
1	EA	WALL STOP	WS406CVX	630	IVE
1	EA	DRIP CAP	16 4"MDW	628	NGP
1	SET	HEAD/JAMB SEAL	105-B + 105-3HJ-B	BLK	DHS
2	EA	CORNER SEAL	DP	BLK	DHS
1	EA	CNCLD BTM SWEEP	AMDB3-3 + CC (HM)		DHS
1	EA	SADDLE THRESHOLD	427 1/4-20-2	719	NGP
2	EA	COAT AND HAT HOOK	582 48" & 60" AFF	626	IVE

For privacy, user projects deadbolt from inside using the lockset's turnpiece. Operating inside lever retracts deadbolt and latchbolt simultaneously for single-motion egress, door remains unlocked.

HwSet 03 - Multi-occupant restroom

Qty		Description	Catalog Number	Finish	Mfr
1	EA	CONT. HINGE	224HD	628	IVE
1	EA	R.R.LOCK+DEADBOLT	LV9456HD OMEA L/TURNPIECE	626	SCH
1	EA	SFIC PERMANENT CORE	C607 G keyway	626	FAL
1	EA	ARMOR COLLAR	A008794 SERIES	630	FAL
1	EA	SURFACE CLOSER	4041 DEL	689	LCN
1	EA	KICK PLATE	8400 10" X 1 1/2" LDW B4E	630	IVE
1	EA	MOP PLATE	8400 4" X 1" LDW B4E	630	IVE
1	EA	WALL STOP	WS406CVX	630	IVE
1	EA	DRIP CAP	16 4"MDW	628	NGP
1	SET	HEAD/JAMB SEAL	105-B + 105-3HJ-B	BLK	DHS
2	EA	CORNER SEAL	DP	BLK	DHS
1	EA	CNCLD BTM SWEEP	AMDB3-3 + CC (HM)		DHS
1	EA	SADDLE THRESHOLD	427 1/4-20-2	719	NGP

Turnpiece omitted, deadbolt cannot be projected from inside by the user. Door is secured only by key outside. Operating inside lever retracts deadbolt and latchbolt simultaneously for single-motion egress, door remains unlocked.

HwSet 04 - Exterior from Audience restroom Vest

Qty		Description	Catalog Number	Finish	Mfr
1	EA	CONT. HINGE	224HD	628	IVE
1	EA	CLASSROOM DEAD LOCK	L9463HD XB11-720	626	SCH
1	EA	SFIC PERMANENT CORE	C607 G keyway	626	FAL
1	EA	PUSH PLATE	8200 6" X 16" CFC	630AM	IVE
1	EA	DOOR PULL	VR900	630	IVE
1	EA	H-SEC SURFACE CLOSER	4211 AVB EDA SRI	689	LCN
1	EA	KICK PLATE	8400 10" X 1 1/2" LDW B4E	630	IVE
1	EA	STOP/HOLDER/ANCHOR	1260 SERIES + 1268CK	626	TRI
1	EA	DRIP CAP	16 4"MDW	628	NGP
1	SET	HEAD/JAMB SEAL	105-B + 105-3HJ-B	BLK	DHS
2	EA	CORNER SEAL	DP	BLK	DHS
1	EA	CNCLD BTM SWEEP	AMDB3-3 + CC (HM)		DHS
1	EA	HVY-DUTY THRSHLD	513HD SIA COMBO	GRY	NGP

Push/pull operation, deadbolt projected by key only, inside turnpiece only retracts the deadbolt. City staff locks/unlocks as needed, checking for occupants before locking afterhours.

HwSet 05 - Exterior to Utility room

Qty		Description	Catalog Number	Finish	Mfr
1	EA	CONT. HINGE	224HD	628	IVE
1	EA	STOREROOM W/DEADBOLT	L9480HD OMEA L583-363	626	SCH
1	EA	SFIC PERMANENT CORE	C607 G keyway	626	FAL
1	EA	PUSH PLATE	8200 6" X 16" CFC	630AM	IVE
1	EA	DOOR PULL	VR900 LLP	630	IVE
1	EA	SURFACE CLOSER	4040XP H	689	LCN
1	EA	KICK PLATE	8400 10" X 1 1/2" LDW B4E	630	IVE
1	EA	WALL STOP	WS406CVX	630	IVE
1	EA	DRIP CAP	16 4"MDW	628	NGP
1	SET	HEAD/JAMB SEAL	105-B + 105-3HJ-B	BLK	DHS
2	EA	CORNER SEAL	DP	BLK	DHS
1	EA	CNCLD BTM SWEEP	AMDB3-3 + CC (HM)		DHS
1	EA	HVY-DUTY THRSHLD	513HD SIA COMBO	GRY	NGP

HwSet 06 - Stage door

Qty		Description	Catalog Number	Finish	Mfr
1	EA	CONT. HINGE	224HD	628	IVE
1	EA	PANIC HARDWARE	CD-98-NL-OP-110MD	626	VON
1	EA	SFIC MORTISE CYL.	80-133 cam as req'd	626	SCH
1	EA	SFIC RIM CYLINDER	80-159	626	SCH
1	EA	SFIC PERMANENT CORE	C607 G keyway	626	FAL
1	EA	DOOR PULL	VR910 NL	630	IVE
1	EA	SURFACE CLOSER	4111 AVB EDA	689	LCN
1	EA	KICK PLATE	8400 10" X 1 1/2" LDW B4E	630	IVE
1	EA	STOP/HOLDER/ANCHOR	1260 SERIES + 1268CK	626	TRI
1	SET	HEAD/JAMB SEAL	105-B + 105-3HJ-B	BLK	DHS
2	EA	CORNER SEAL	DP	BLK	DHS
1	EA	CNCLD BTM SWEEP	AMDB3-3 + CC (HM)		DHS
1	EA	HVY-DUTY THRSHLD	513HD SIA COMBO	GRY	NGP

HwSet 07 - Exterior from Fire Riser rm

Qty		Description	Catalog Number	Finish	Mfr
1	EA	CONT. HINGE	224HD	628	IVE
1	EA	STOREROOM W/DEADBOLT	L9480HD OMEA L583-363	626	SCH
1	EA	SFIC PERMANENT CORE	C607 G keyway	626	FAL
1	EA	DOOR PULL	VR900	630	IVE
1	EA	SURFACE CLOSER	4040XP HEDA	689	LCN
1	EA	KICK PLATE	8400 10" X 1 1/2" LDW B4E	630	IVE
1	EA	FLR STOP+ANCHOR	1214CK + 1268CK	613	TRI
1	EA	DRIP CAP	16 4"MDW	628	NGP
1	SET	HEAD/JAMB SEAL	105-B + 105-3HJ-B	BLK	DHS
2	EA	CORNER SEAL	DP	BLK	DHS
1	EA	CNCLD BTM SWEEP	AMDB3-3 + CC (HM)		DHS
1	EA	SADDLE THRESHOLD	427 1/4-20-2	719	NGP

HwSet 08 - electrical closets at stage door entryway

Qty		Description	Catalog Number	Finish	Mfr
2	EA	CONT. HINGE	224HD	628	IVE
1	EA	MANUAL FLUSH BOLT	FB458 18"	626	IVE
1	EA	CONST LATCHING BOLT	FB51T	630	IVE
1	EA	DUST PROOF STRIKE	DP1	626	IVE
1	EA	DEADLOCK	L9460HD L583-363	626	SCH
1	EA	SFIC PERMANENT CORE	C607 G keyway	626	FAL
1	EA	DOOR PULL	VR900 LLP	630	IVE
2	EA	HYDRAULIC CHECK	4111 AVB HCUSH ST2687	693	LCN
1	SET	HEAD/JAMB SEAL	105-B + 105-3HJ-B	BLK	DHS
2	EA	CORNER SEAL	DP	BLK	DHS
1	EA	MTG STILE SEAL	SA-B	BLK	DHS
1	EA	ASTRAGAL	139SP 84" SNB	600	NGP
2	EA	SURFACE BTM SWEEP	SSDB3-3	628	DHS
1	EA	SADDLE THRESHOLD	427 1/4-20-2	719	NGP

HwSet 09 - Wing, stage left. Fire exit hardware, electrically retracted during performances for silent push/pull operation, released automatically in a fire-alarm event. Door can also be swung fully-open and held-open electromagnetically

Qty		Description	Catalog Number	Finish	Mfr
1	EA	CONT. HINGE	224HD	628	IVE
1	EA	POWER TRANSFER	EPT10	689	VON
1	EA	ELEC FIRE EXIT HARDWARE	QEL+-98-L-F-996-16	626	VON
1	EA	SFIC RIM CYLINDER	80-159	626	SCH
1	EA	SFIC PERMANENT CORE	C607 G keyway	626	FAL
1	EA	SURFACE CLOSER	4111 AVB EDA	689	LCN
1	EA	KICK PLATE	8400 10" X 1 1/2" LDW B4E	630	IVE
1	EA	FIRE/LIFE WALL MAG	SEM7800 SERIES	689	LCN
1	SET	HEAD/JAMB SEAL	105-B + 105-3HJ-B	BLK	DHS
2	EA	CORNER SEAL	DP	BLK	DHS
1	EA	CNCLD BTM SWEEP	AMDB3-3 + CC (HM)		DHS
1	EA	HVY-DUTY THRSHLD	513HD SIA COMBO	GRY	NGP
1	EA	POWER SUPPLY	PS914 900-BBK FA900 KL900	LGR	VON

COORDINATE: power / wiring / conduit / fire&life-safety system. Fire door must release in an alarm event to self-close and positively latch.

HwSet 10 - Crossover from platform/stage, not a path of egress. Fire-labeled doors, must be positive latching. Door leafs operate independently of each other, allowing performance flexibility. Electromagnetic hold-open.

Qty		Description	Catalog Number	Finish	Mfr
2	EA	CONT. HINGE	224HD EPT	628	IVE
2	EA	TWO POINT LATCH	237-L-NL-17	626	VON
4	EA	SFIC MORTISE CYL.	80-133 cam as req'd	626	SCH
4	EA	SFIC PERMANENT CORE	C607 G keyway	626	FAL
2	EA	SURFACE CLOSER	4011T SRI ST:AVB	689	LCN
1	EA	MOUNTING PLATE	4020-18 SRI	689	LCN
2	EA	FLR STOP+ANCHOR	1214CK + 1268CK	613	TRI
2	EA	FIRE/LIFE WALL MAG	SEM7800 SERIES	689	LCN
1	EA	DRIP CAP	16 4"MDW	628	NGP
1	SET	HEAD/JAMB SEAL	105-B + 105-3HJ-B	BLK	DHS
1	EA	MTG STILE SEAL	SA-B	BLK	DHS
1	EA	HVY-DUTY THRSHLD	513HD SIA COMBO	GRY	NGP

COORDINATE: power / wiring / conduit / fire&life-safety system. Fire door leafs must release in an alarm event to self-close and positively latch.

HwSet 11 - Wing, stage right. Fire exit hardware, electrically retracted during performances for silent push/pull operation, released automatically in a fire-alarm event. Door can also be swung fully-open and held-open electromagnetically

Qty		Description	Catalog Number	Finish	Mfr
2	EA	CONT. HINGE	224HD EPT	628	IVE
2	EA	POWER TRANSFER	EPT10	689	VON
2	EA	FIRE EXIT HARDWARE	9849-L-F-996-16	626	VON
2	EA	SFIC RIM CYLINDER	80-159	626	SCH
2	EA	SFIC PERMANENT CORE	C607 G keyway	626	FAL
2	EA	SURFACE CLOSER	4111 AVB EDA	689	LCN
2	EA	KICK PLATE	8400 10" X 1" LDW B4E	630	IVE
2	EA	FIRE/LIFE WALL MAG	SEM7800 SERIES	689	LCN
1	EA	DRIP CAP	16 4"MDW	628	NGP
1	SET	HEAD/JAMB SEAL	105-B + 105-3HJ-B	BLK	DHS
2	EA	CORNER SEAL	DP	BLK	DHS
1	EA	MTG STILE SEAL	SA-B	BLK	DHS
2	EA	SURFACE BTM SWEEP	SSDB3-3	628	DHS
1	EA	HVY-DUTY THRSHLD	513HD SIA COMBO	GRY	NGP

COORDINATE: power / wiring / conduit / fire&life-safety system. Fire door leafs must release in an alarm event to self-close and positively latch.

HwSet 12 - Green Room Patio access. Fire exit hardware, electrically retracted during performances for silent push/pull operation, released automatically in a fire-alarm event. Door can also be swung fully-open and held-open electromagnetically.

Qty		Description	Catalog Number	Finish	Mfr
2	EA	CONT. HINGE	224HD EPT	628	IVE
2	EA	POWER TRANSFER	EPT10	689	VON
1	EA	ELEC FIRE EXIT HARDWARE	QEL+-9849-EO-F	626	VON
1	EA	ELEC FIRE EXIT HARDWARE	QEL+-9849-L-F-996-16	626	VON
1	EA	SFIC RIM CYLINDER	80-159	626	SCH
1	EA	SFIC PERMANENT CORE	C607 G keyway	626	FAL
2	EA	SURFACE CLOSER	4111 AVB EDA	689	LCN
2	EA	KICK PLATE	8400 10" X 1" LDW B4E	630	IVE
2	EA	FIRE/LIFE WALL MAG	SEM7800 SERIES	689	LCN
1	EA	DRIP CAP	16 4"MDW	628	NGP
1	SET	HEAD/JAMB SEAL	105-B + 105-3HJ-B	BLK	DHS
2	EA	CORNER SEAL	DP	BLK	DHS
1	EA	MTG STILE SEAL	SA-B	BLK	DHS
2	EA	SURFACE BTM SWEEP	SSDB3-3	628	DHS
1	EA	HVY-DUTY THRSHLD	513HD SIA COMBO	GRY	NGP

COORDINATE: power / wiring / conduit / fire&life-safety system. Fire door leafs must release in an alarm event to self-close and positively latch.

HwSet 13 - Audience restroom: interior vestibule door -- push/pull, non-locking

Qty		Description	Catalog Number	Finish	Mfr
1	EA	CONT. HINGE	224HD	628	IVE
1	EA	PUSH PLATE	8200 6" X 16"	630AM	IVE

1	EA	DOOR PULL	VR910 DT	630	IVE
1	EA	H-SEC SURFACE CLOSER	4511 AVB EDA	689	LCN
1	EA	KICK PLATE	8400 10" X 1 1/2" LDW B4E	630	IVE
1	EA	KICK PLATE	8400 10" X 1" LDW B4E	630	IVE
1	EA	STOP/HOLDER/ANCHOR	1260 SERIES + 1268CK	626	TRI
1	SET	HEAD/JAMB SEAL	105-B + 105-3HJ-B	BLK	DHS

HwSet 14 - private restroom

Qty		Description	Catalog Number	Finish	Mfr
1	EA	CONT. HINGE	224HD	628	IVE
1	EA	PRIVACY W/DEADBOLT	L9440 OMEA L583-363	626	SCH
1	EA	SURFACE CLOSER	4040XP HEDA	689	LCN
1	EA	KICK PLATE	8400 10" X 1 1/2" LDW B4E	630	IVE
1	SET	HEAD/JAMB SEAL	105-B + 105-3HJ-B	BLK	DHS
1	EA	CNCLD BTM SWEEP	AMDB3-3 + CC, AMU (HM)		DHS

stone threshold: part of another section

HwSet 15 - Audio/visual equip stg

Qty		Description	Catalog Number	Finish	Mfr
1	EA	CONT. HINGE	224HD	628	IVE
1	EA	CLASSROOM LOCK	L9070HD OMEA	626	SCH
1	EA	SFIC PERMANENT CORE	C607 G keyway	626	FAL
1	EA	SURFACE CLOSER	4041 DEL	689	LCN
1	EA	KICK PLATE	8400 10" X 1 1/2" LDW B4E	630	IVE
1	EA	FLOOR STOP	FS439	682	IVE
1	SET	HEAD/JAMB SEAL	105-B + 105-3HJ-B	BLK	DHS
1	EA	CNCLD BTM SWEEP	AMDB3-3 + CC (HM)		DHS
1	EA	SADDLE THRESHOLD	427 1/4-20-2	719	NGP

HwSet 16 - City's storage room

Qty		Description	Catalog Number	Finish	Mfr
2	EA	CONT. HINGE	224HD	628	IVE
2	EA	MANUAL FLUSH BOLT	FB458 18"	626	IVE
1	EA	CONST LATCHING BOLT	FB51T	630	IVE
1	EA	DUST PROOF STRIKE	DP1	626	IVE
1	EA	CLASSROOM LOCK	L9070HD OMEA	626	SCH
1	EA	SFIC PERMANENT CORE	C607 G keyway	626	FAL
2	EA	SURFACE CLOSER	4040XPT	689	LCN
2	EA	FLOOR STOP	FS439	682	IVE
1	SET	HEAD/JAMB SEAL	105-B + 105-3HJ-B	BLK	DHS
1	EA	MTG STILE SEAL	SA-B	BLK	DHS
1	EA	ASTRAGAL	139SP 84" SNB	600	NGP
2	EA	SURFACE BTM SWEEP	SSDB3-3	628	DHS
1	EA	SADDLE THRESHOLD	427 1/4-20-2	719	NGP

HwSet 17 - Special: center-pivoting stage wing door panels, 360deg pivoting, electromagnetic locking plus

Qty		Description	Catalog Number	Finish	Mfr
1	EA	PIVOT SET	7253 SET	626	IVE
1	EA	FLUSH BOLT	454		HEN
1	EA	SHEAR LOCK	GF3000 DSM/MBS	335	SCE
1	EA	FLUSH PULL	1060	630	TRI
2	EA	MTG STILE SEAL	SA-B	BLK	DHS

Design intent: stage-side flush/clean of hardware. Locate pull and flush bolt on wing side of pivoting leaf. Applied acoustic applique devices on one side of the panel, panel can be rotated w/ applique on stage-side or wing-side to suit performance requirements.
Flush bolt: use to secure panel at varying degrees of rotation, to be determined at a later time. For bid, include four in-floor sleeves/floor-strikes per panel.
One PS906 power supply to support all six panels, see "WING PANEL CNTRL" set; key switch controls power for the locks.

HwSet G.1 - Man-gate, panic hardware, outside key access

Qty		Description	Catalog Number	Finish	Mfr
1	SET	GATE PIVOT	BHSQ6 / BHSQ8		
1	EA	PANIC HARDWARE	CD-98-NL-OP-110MD	626	VON
1	EA	SFIC MORTISE CYL.	80-133 cam as req'd	626	SCH
1	EA	SFIC RIM CYLINDER	80-159	626	SCH
1	EA	SFIC PERMANENT CORE	C607 G keyway	626	FAL
1	EA	ARMOR COLLAR	A008794 SERIES	630	FAL
1	EA	DOOR PULL	VR910 NL	630	IVE
1	EA	GATE CLOSER	1351	600	RIX
1	EA	HVY-DUTY FLR STOP	1258M + 1257R	626	TRI

gate pivot source: Jansensupply.com

HwSet G.2 - vehicle gate @ loading area

Qty		Description	Catalog Number	Finish	Mfr
1	EA	PADLOCK L/CYL-SFIC	KS41F1200	606	SCH
1	EA	SFIC PERMANENT CORE	C607 G keyway	626	FAL

remaining hardware: hinges/pivots, bolt-works, stopping devices -- part of gate fabrication pkg.

HwSet G.3 - pair of walk-thru gates @ loading

Qty		Description	Catalog Number	Finish	Mfr
2	SET	GATE PIVOT	BHSQ6 / BHSQ8		
1	EA	CANE BOLT, 3/4"D	524.00023, PADLOCKABLE	603	RIC
2	EA	CANE BOLT KEEPER	-FOR BOLTING OPEN-		RIC
1	EA	DEADLOCK	L9460HD LLL 06N EE L583-363 XL11-886	630	SCH
1	EA	PADLOCK L/CYL-SFIC	KS41F1200	606	SCH
2	EA	SFIC PERMANENT CORE	C607 G keyway	626	FAL
1	EA	WELD-IN LOCK BX	K-BX-MOR	600	KEE
1	EA	DOOR PULL	VR900 LLP	630	IVE
2	EA	HVY-DUTY FLR STOP	1258M + 1257R	626	TRI

HwSet HOLDBACK CNTRL - keyswitch, controls fire-exit devices' latch hold-back and and doors' electromagnetic hold-open capability.

Qty		Description	Catalog Number	Finish	Mfr
1	EA	INTERFACE BOX	JB7	GRAY	VON
1	EA	SFIC MORTISE CYL.	80-133 cam as req'd	626	SCH
1	EA	SFIC PERMANENT CORE	C607 G keyway	626	FAL
1	EA	SIGN (DIV. 10)	"DOOR HOLD-OPEN"		
1	EA	KEYSWITCH	653-04 HDP L2	626	SCE
1	EA	WIRING DIAGRAM	09.1/11.1/11.2/12.1/21.1/21.2		VON

COORDINATE: power / wiring / conduit / fire&life-safety system. Fire door must release in an alarm event to self-close and positively latch.

Operation: when needed, doors 09.1, 12.1, 21.1, & 21.2 will have their latches held electrically retracted, and also when needed those doors, plus 11.1 and 11.2, can be swung fully-open and left in a held-open condition. Turn of key in keyswitch controls the power, putting all six openings into push/pull operation with hold-open capability. Fire-alarm event cuts off hardware power, causing doors to release and the latches to project. RED/GREEN LED indicator lamps indicate holdback engaged/released. Coordinate with Division 10 for local sign at keyswitch.

HwSet WING PANEL CNTRL - Support items for center-pivoting wing panels.

Qty		Description	Catalog Number	Finish	Mfr
1	EA	INTERFACE BOX	JB7	GRAY	VON
1	EA	SFIC MORTISE CYL.	80-133 cam as req'd	626	SCH
1	EA	SFIC PERMANENT CORE	C607 G keyway	626	FAL
1	EA	SIGN (DIV. 10)	"WING PANEL LOCKS"		
1	EA	KEYSWITCH	653-04 HDP L2	626	SCE
1	EA	POWER SUPPLY	PS906	LGR	SCE
1	EA	WIRING DIAGRAM	10.1 thru 10.6		VON

Proposed location for keyswitch: A/V Equip Rm 14
Coordinate with Division 10 for local sign at keyswitch.

Miscellaneous Items

Qty		Description	Catalog Number	Finish	Mfr	Handing
1	EA	CONST LATCHING BOLT	FB51T	630	IVE	
1	EA	SFIC MORTISE CYL.	80-133 cam as req'd	626	SCH	
1	EA	SFIC RIM CYLINDER	80-159	626	SCH	
6	EA	SFIC PERMANENT CORE	C607 G keyway	626	FAL	
2	EA	SURFACE CLOSER	4040XP H	689	LCN	
1	EA	POWER SUPPLY	PS906	LGR	SCE	
1	EA	POWER SUPPLY	PS914 900-BBK FA900 KL900	LGR	VON	

End of Section

SECTION 08800

GLAZING

PART 1 - GENERAL

1.1 SUMMARY:

1.1.1 Section Includes: The furnishing and installing of glass work complete, as indicated and specified.

1.1.2 Related Documents: The Conditions of the Contract and Division 1 apply to this section as fully as if repeated herein.

1.2 REFERENCES:

The editions of standards and specifications published by the following organizations, and referenced herein, apply to the work only to the extent specified by the reference. Refer to Section 01422 for information concerning availability and use of references.

American National Standards Institute (ANSI)
American Society for Testing and Materials (ASTM)
Architectural Aluminum Manufacturers Association (AAMA)
Glass Association of North America (GANA)
National Fenestration Rating Council (NFRC)
Underwriter's Laboratories, Inc. (UL)

1.3 DESIGN REQUIREMENTS:

Where glass thicknesses are not indicated, provide thickness based on the wind pressures required by California Code of Regulations (CCR) Title 24 Part 2, California Building Code, Sec. 1613. Wind pressure shall be assumed to have a one minute duration. Upon first application of design wind load for the specified durations, probability of breakage shall not exceed 8/1000 for vertical glass and 1/1000 for sloped glass. Probability of breakage relative to glass thermal stress shall not exceed 8/1000 for vertical glass and 1/1000 for sloped glass.

1.4 SUBMITTALS:

1.4.1 Certificates of Compliance from glass and glazing materials manufacturers attesting that glass and glazing materials furnished for project comply with requirements. Separate certification will not be required for glazing materials bearing manufacturer’s permanent label designating type and thickness of glass, provided labels represent a quality control program involving a recognized certification agency, or independent testing laboratory acceptable to authority having jurisdiction.

1.4.2 Submittal procedures and quantities are specified in Division 1.

1.5 QUALITY ASSURANCE:

1.5.1 Regulatory Requirements:

.1 Glass and glazing shall conform with the CCR Title 24 Part 2 California Building Code Chapter 24 - Glass and Glazing, and to Consumer Product Safety Commission regulation (CPSC) 16 CFR, Part 1201.

.2 Where safety glass is indicated or required by local building official, provide glazing materials that conform to ANSI Z97.1-1984 and CPSC16CFR, Part 1201 and are so identified in accordance with CCR Title 24 Part 2 Sec. 2406.2.

.3 Certification by NFRC with label; include SHGC calculation method.

1.6 DELIVERY, STORAGE AND HANDLING:

1.6.1 Delivery: Do not deliver glass to the site until the areas to be glazed are ready to receive the glass. Deliver glass in manufacturers storage cases with interleaving between lights. Deliver glazing compound in manufacturer's original cartons with labels intact.

1.6.2 Storage: Store glass in original storage cases. Store cases in a dry, well ventilated area with temperatures maintained above the dew point. Do not store glass where it will be exposed to direct sunlight.

1.6.3 Handling: Do not unpack glass until needed for installation. Handle and install materials in a manner to prevent breakage, scratching or other damage. Keep vacuum cups free from foreign material that would scratch glass.

1.6.4 Take special care to prevent damage to factory clean cut edges of reflective glass, and tinted glass during delivery, storage, and handling.

1.7 PROJECT CONDITIONS:

Do not perform glazing work when ambient temperature is below 40 degrees F. Provide sufficient ventilation to prevent condensation from forming on surfaces to be glazed. Do not perform glazing during damp or rainy weather.

1.8 GUARANTEE:

1.8.1 Guarantees specified herein are in addition to the general warrantee and correction of work requirements of the General Conditions. Submit guarantees signed by the glass manufacturer, the glazier and the Contractor and submit in accordance with Division 1.

PART 2 - PRODUCTS

2.1 GLASS MATERIALS:

2.1.1 Heat Treated and Tempered Glass: Meet the requirements of ASTM C 1048, kinds, conditions, types, classes, styles, and forms specified below. Where indicated and where required in hazardous locations as defined in CCR Title 24 Part 2 Sec. 2406.4, glass shall be tempered.

.1 Tempered Clear Float Glass: Kind FT (fully tempered), Condition A (uncoated surfaces), Type I (transparent glass, flat), Class 1 (clear), Quality q^3 (glazing select).

2.2 GLAZING MATERIALS:

2.2.1 Setting Blocks: EPDM, neoprene or silicone, 70-90 Durometer (Shore A) hardness. Setting blocks for use in structural silicone glazing shall be compatible with the silicone sealant.

2.2.2 Spacers: EPDM, neoprene or silicone, 50-60 Durometer (Shore A) hardness. Spacers for use in structural silicone glazing shall be compatible with the silicone sealant.

2.2.3 Clips for Metal Surrounds: Respective surround manufacturer's standard, (steel to steel, aluminum to aluminum, etc.).

2.2.4 Sealants for Glazing: ASTM C 920, type S, grade NS, class 25, use G. The sealants shall be compatible with the sealant used in the insulated glass assembly and with the interlayer used in the laminated glass.

2.2.5 Primers: Provide primers as recommended by the sealant manufacturer or required by preconstruction sealant adhesion testing for the substrates encountered.

2.2.6 Preformed Sealant Tape: Preshimmed butyl polyisobutylene tape conforming to AMAA 804.1-1969. Acceptable products or equal:

Pecora Corp.; Extru-Seal Preshimmed Tape
Protective Treatments Inc.; PTI 303 Spacer Rod Tape
Tremco; Preshimmed 440 Tape

2.2.7 Preformed Gaskets: Closed cell sponge neoprene conforming to ASTM C 509 and dense neoprene wedge gaskets conforming to ASTM C 864. Gaskets shall be preformed to shapes and sizes to suit the glazing stops furnished with the doors, windows, storefront, and curtain wall system and to compress the sponge neoprene gasket 25 percent to 40 percent.

2.3 GLAZING COMPOUNDS FOR FIRE-RATED GLAZING MATERIALS:

2.4.1 Glazing Tape: Closed cell polyvinyl chloride (PVC) foam, coiled on release paper over adhesive on two sides, maximum water absorption by volume of 2 percent. Glass panels that exceed 1,393 sq. inches for 90 minute ratings must be glazed with fire-rated glazing tape supplied my manufacturer.

2.4.2 Glazing Compound: DAP 33 putty.

2.4.3 Setting Blocks: Neoprene, EPDM, or silicone, tested for compatibility with glazing compound; of 70 to 90 Shore A hardness.

2.4.4 Cleaners, Primers, and Sealers: Type recommended by manufacturer of glass and gaskets.

2.4 SOURCE QUALITY CONTROL:

2.4.1 Preconstruction Sealant Adhesion Testing: Submit glass and glazing substrate materials to which structural sealant will be adhered to the sealant manufacturer to determine the following:

.1 If primers are required to ensure adhesion with the substrate.

.2 If sealant will withstand the effects of ultra violet radiation exposure for 21 days, when in contact with glass and glazing substrates, without developing adhesive failure or sealant discoloration.

PART 3 - EXECUTION

3.1 EXAMINATION:

3.1.1 Examine framing that is to receive glazing to ensure compliance with manufacturing and installation tolerances, including those for size, squareness, offsets at corners; for presence and functioning of weep system, for minimum face and edge clearances and for effective sealing of joinery.

3.1.2 Do not start work until deficiencies have been corrected. Start of work of this section constitutes acceptance of the surfaces.

3.2 PREPARATION:

3.2.1 Immediately before glazing, clean glazing channels and framing members indicated to receive glass. Remove coatings that are not firmly bonded to substrates. Remove lacquer and protective coatings from metal surfaces to which sealants will be applied.

3.2.2 Priming: Apply primers to joint surfaces where recommended by the sealant manufacturer and where required by preconstruction sealant adhesion testing for adhesion of sealants.

3.3 GLAZING:

3.3.1 General Glazing Requirements: Conform to the guidelines for glazing contained in the GANA "Glazing Manual" supplemented by the glass and sealant manufacturer's recommendations. Shop cut glass; cut clean, straight edges, free from chips and fissures.

.1 Manufacturer's labels, showing strength, grade, thickness, type and quality shall be required on each piece of factory cut glass. Labels shall remain on glass until it has been set, inspected, and reviewed.

.2 Sizes indicated are approximate. Actual sizes shall be determined by measuring in the field.

.3 Stops or beads for glazed openings are specified in other sections of these specifications.

3.3.2 Tempered Glass: Tong marks of tempered plate glass, when glazing, shall occur on the side of the narrow dimension only. When the long dimension of glass panes are vertical the tong marks shall occur at the bottom of the pane.

3.4 REGLAZING:

Broken windows and other glass areas to be reglazed shall have all broken glass cleanly removed from rabbets and glass stops. All old glazing compound shall be removed from rabbets and stops, and all surfaces to receive new glazing compound shall be washed clean with solvent. Reglazing shall conform to the requirements specified under "Glazing" after preparing rabbets and stops as specified above.

3.5 CLEANING AND PROTECTION:

3.5.1 Upon completion of the glazing work and after review by the Architect of the glass installation, glass surfaces shall be thoroughly cleaned, and labels, paint spots, and other defacements shall be removed. Cleaning solution shall not etch or stain frames, painted or finished surfaces, or affect the glazing compound.

3.5.2 Cracked, broken, and imperfect glass shall be replaced at no additional cost to the Owner. Protect all glass against damage from weld spatter, stains from alkaline or fluorine materials, abrasive materials or other damage until final acceptance of the Project. Where it is necessary to alert workmen that openings have been glazed, use tape or banners attached to framing. Do not apply paint or other foreign matter directly on the glass.

END OF SECTION

34-003 – 01/27/2014

Door Schedule

Door #	HW Set	Mode	Width	Height	Thick	Door	Frame	Rating	Outside Location	Inside Location
01.1	06	SGL	3' 0"	7' 0"	1 3/4"	HMD	HMF	NONRTD	EXTERIOR	STAGE DOOR / ENTRYWAY
02.1	08	PR	6' 4"	7' 8"	1 3/4"	HMD	HMF	NONRTD	EXTERIOR	STAGE DOOR / ENTRYWAY
02.2	08	PR	6' 4"	7' 8"	1 3/4"	HMD	HMF	NONRTD	EXTERIOR	STAGE DOOR / ENTRYWAY
03.1	05	SGL	3' 0"	7' 0"	1 3/4"	HMD	HMF	NONRTD	EXTERIOR	UTILITY
03.2	05	SGL	3' 0"	7' 0"	1 3/4"	HMD	HMF	NONRTD	EXTERIOR	UTILITY
04.1	07	SGL	3' 0"	7' 0"	1 3/4"	HMD	HMF	NONRTD	EXTERIOR	FIRE RISER
05.1	04	SGL	3' 0"	7' 0"	1 3/4"	HMD	HMF	NONRTD	EXTERIOR	MEN'S RR VEST (AUDIENCE)
06.1	04	SGL	3' 0"	7' 0"	1 3/4"	HMD	HMF	NONRTD	EXTERIOR	WOMEN'S RR VEST (AUDIENCE)
07.1	13	SGL	3' 0"	7' 0"	1 3/4"	HMD	HMF	NONRTD	WOMEN'S RR VEST (AUDIENCE)	WOMEN'S RR (AUDIENCE)
08.1	13	SGL	3' 0"	7' 0"	1 3/4"	HMD	HMF	NONRTD	MEN'S RR VEST (AUDIENCE)	MEN'S RR (AUDIENCE)
09.1	09	SGL	4' 0"	8' 0"	1 3/4"	HMD	HMF	45PPS	CROSSOVER	WING, STAGE LEFT
10.1	17	SGL	7' 0"	12' 0"	3"	HMD	HMF	NONRTD	PLATFORM / STAGE	WING, STAGE RIGHT
10.2	17	SGL	7' 0"	12' 0"	3"	HMD	HMF	NONRTD	PLATFORM / STAGE	WING, STAGE RIGHT
10.3	17	SGL	7' 0"	12' 0"	3"	HMD	HMF	NONRTD	PLATFORM / STAGE	WING, STAGE RIGHT
10.4	17	SGL	7' 0"	12' 0"	3"	HMD	HMF	NONRTD	PLATFORM / STAGE	WING, STAGE RIGHT
10.5	17	SGL	7' 0"	12' 0"	3"	HMD	HMF	NONRTD	PLATFORM / STAGE	WING, STAGE RIGHT
10.6	17	SGL	7' 0"	12' 0"	3"	HMD	HMF	NONRTD	PLATFORM / STAGE	WING, STAGE RIGHT
11.1	11	SGL	4' 0"	8' 0"	1 3/4"	HMD	HMF	45PPS	CROSSOVER	PLATFORM / STAGE
11.2	10	PR	6' 0"	10' 0"	1 3/4"	HMD	HMF	45PPS	CROSSOVER	PLATFORM / STAGE
12.1	12.1	PR	6' 0"	10' 0"	1 3/4"	HMD	HMF	45PPS	CROSSOVER	WING, STAGE RIGHT
13.1	16	PR	6' 0"	7' 0"	1 3/4"	HMD	HMF	45PPS	WING, STAGE RIGHT	CITY STORAGE
14.1	15	SGL	3' 0"	7' 0"	1 3/4"	HMD	HMF	45PPS	WING, STAGE RIGHT	A/V STORAGE
16.1	02	SGL	3' 0"	7' 0"	1 3/4"	HMD	HMF	45PPS	EXTERIOR (GREEN RM PATIO)	PRINCIPAL DRESSING RM
16.2	14	SGL	3' 0"	7' 0"	1 3/4"	HMD	HMF	NONRTD	PRINCIPAL DRESSING RM	PRINCIPAL RESTROOM
17.1	03	SGL	3' 0"	7' 0"	1 3/4"	HMD	HMF	45PPS	EXTERIOR (GREEN RM PATIO)	WOMEN'S RR
18.1	03	SGL	3' 0"	7' 0"	1 3/4"	HMD	HMF	45PPS	EXTERIOR (GREEN RM PATIO)	MEN'S RR
19.1	02	SGL	3' 0"	7' 0"	1 3/4"	HMD	HMF	45PPS	EXTERIOR (GREEN RM PATIO)	PRINCIPAL DRESSING RM
19.2	14	SGL	3' 0"	7' 0"	1 3/4"	HMD	HMF	NONRTD	PRINCIPAL DRESSING RM	PRINCIPAL RESTROOM
21.1	12.2	PR	6' 0"	8' 0"	1 3/4"	HMD	HMF	45PPS	CROSSOVER	GREEN ROOM PATION
21.2	12.2	PR	6' 0"	8' 0"	1 3/4"	HMD	HMF	45PPS	CROSSOVER	GREEN ROOM PATION
22.1	01	SGL	3' 0"	7' 0"	1 3/4"	HMD	HMF	45PPS	EXTERIOR (GREEN RM PATIO)	CHORUS DRESSING
23.1	01	SGL	3' 0"	7' 0"	1 3/4"	HMD	HMF	45PPS	EXTERIOR (GREEN RM PATIO)	CHORUS DRESSING

SECTION 09208

METAL LATH

PART 1 - GENERAL

1.1 SUMMARY:

1.1.1 Section Includes: Metal lath for interior and exterior plaster work, and for backing for ceramic tile.

1.1.2 Related Documents: The Conditions of the Contract and Division 1 apply to this section as fully as if repeated herein.

1.2 REFERENCES:

The editions of standards and specifications published by the following organizations, and referenced herein, apply to the work only to the extent specified by the reference. Refer to Section 01422 for information concerning availability and use of references.

Aluminum Association (AA)
American Society for Testing and Materials (ASTM)
Western Lath/Plaster/Drywall Industries Association (WLPDIA)
General Services Administration Federal Specifications (Fed. Spec.)

1.3 SUBMITTALS:

1.3.1 Product Data: Submit manufacturer's certificates or other data indicating that lath and paper backing materials conform to the standards referenced. Submit descriptive data showing materials, finishes and sizes of accessories.

1.3.2 Samples: Submit 12 inch lengths of each type of aluminum screed and molding required showing finish and color.

1.3.3 Submittal procedures and quantities are specified in Division 1.

1.4 REGULATORY REQUIREMENTS:

1.4.1 Lathing work shall meet the requirements of the 2010 California Building Code (CBC) Title 24 Part 2, Chapter 25 - Gypsum Board and Plaster. Fire resistive walls, partitions and ceilings shall also conform to CBC Title 24 Part 2 Chapter 7 - Fire-Resistant Materials and Construction.

1.5 DELIVERY, STORAGE, AND HANDLING:

Deliver materials in the original packages, containers or bundles bearing the name of the manufacturer, brand, type and weight. Store lathing materials at the site in a dry location, raised above the ground, and protected from weather, surface contamination, corrosion, or

physical damage from construction traffic and other causes. Protect metal accessories from being bent or otherwise damaged.

PART 2 - PRODUCTS

2.1 METAL LATH:

2.1.1 General: Use hot-dip galvanized lath, ASTM A 653, designation G60, at exterior areas. Where type of lath is not specified or indicated for a specific application, select lath to comply with the support spacing limitations of CBC Title 24 Part 2 Table 25-B. Where solid backing occurs, use self-furring lath designed to hold the lath a minimum of 1/4 inch away from the backing.

2.1.2 Expanded Metal Lath: ASTM C 847, types as follows:

.1 Exterior Vertical Areas: Self-furring diamond mesh expanded metal lath weighing not less than 3.4 pounds per square yard.

.2 Interior Vertical Areas: Flat diamond mesh expanded metal lath weighing not less than 3.4 pounds per square yard.

.3 Horizontal Areas: 3/8 inch ribbed expanded metal lath weighing not less than 3.4 pounds per square yard where supports are spaced 24 inches on center and diamond mesh expanded metal lath weighing not less than 3.4 pounds per square yard where supports are spaced 16 inches on center.

2.1.3 Woven Wire Lath: ASTM C 1032. At the Contractor's option, 1-1/2 inch mesh, 17 gage woven wire lath may be used for exterior vertical plaster surfaces. Woven wire lath will not be permitted for plaster backing for adhered brick veneer or ceramic tile.

2.1.4 Welded Wire Lath: ASTM C 933. At the Contractor's option, 2"by 2", 16 gage welded wire lath may be used for exterior vertical plaster surfaces. Welded wire lath will not be permitted for plaster backing for adhered brick veneer or ceramic tile.

2.2 WEATHER RESISTIVE BARRIER:

2.2.1 Provide backing of waterproof vegetable fiber (kraft) building paper at vertical surfaces of exterior walls and of interior partitions around showers. Paper shall comply with Fed. Spec. UU-B-790A (1), Type I, Grade B where single layer is specified and Grade D where double layer is specified. Where the paper is exposed above suspended ceilings or in attics or where wall is required to have a fire resistive rating provide flame resistant paper Sisalkraft "Pyro-Kure 604" or equal. Apply backing for ceramic tile as a separate layer. Backing for all other plaster applications may be factory attached to the back of the lath or applied as a separate layer at the Contractor's option.

2.3 ACCESSORIES:

2.3.1 Metal Accessories: Types specified below conforming to WLPDIA "Plaster and Drywall Systems Manual" Third Edition, Chapter Two. Where galvanized accessories are specified, use hot-dip galvanized steel, ASTM A 653, designation G60. Provide metal shapes used as grounds of such size and dimension as to provide for required plaster thickness.

.1 Corner Beads: WLPDIA detail 13-A Small Nose Corner Bead, with nose not exceeding 3/16 inch and expanded flanges at least 2-1/2 inches wide. Corner beads shall be fabricated of 26 gage hot-dip galvanized steel.

.2 Corner Reinforcement: WLPDIA detail 15-A or 15-B fabricated from expanded metal with large openings, from welded or woven copper bearing steel wire of minimum 18 gage, hot-dip galvanized.

.3 Casing Beads: WLPDIA detail 14-A-Square Casing Beads, fabricated of 26 gage hot-dip galvanized steel for interior locations and 0.017 inch thick zinc alloy for exterior locations. Provide beads with expanded metal flange and inverted vee at plaster edge of face flange.

.4 Cornerite: WLPDIA detail 20-A-Expanded Metal Cornerite, weighing 2.5 pounds per square yard, bent in center to form 100 degree angle, 6 inches wide. Use hot-dip galvanized at all locations where galvanized metal lath occurs.

.5 Strip Lath: WLPDIA detail 21-A-Strip Reinforcement (Expanded Metal), weighing 2.5 pounds per square yard, 6 inches wide. Use hot-dip galvanized at all locations where galvanized metal lath occurs.

.6 Base Screeds: WLPDIA detail 12-Base or Parting Screeds, fabricated of 26 gage hot-dip galvanized sheet steel.

.7 Stress Relief Joints (Expansion and Control Joints): WLPDIA detail 22-Stress Relief Control Joints, fabricated of 29 gage hot-dip galvanized steel for interior locations and 0.017 inch thick zinc alloy for exterior locations. Recesses on control joints shall be covered with removable tape or filled with rope to prevent plaster from filling the recess.

.8 Foundation Weep Screeds: WLPDIA detail 24-A, perforated type, fabricated of 0.017 inch thick zinc alloy.

2.3.2 Aluminum Screeds and Moldings: Fabricate moldings of extruded aluminum alloy 6063-T5, 0.050 inch thick with a clear anodized finish conforming to AA designation C12C22A21. Moldings shall be of size and configuration indicated on the drawings.

.1 Manufacturers: Subject to compliance with requirements, provide products by one of the following:

Fry Reglet Corp.
Gordon, Inc.
MM Systems Corp.

2.3.3 Fasteners for Metal Lath and Accessories: Nails, staples, or screws of types and sizes required by CBC Title 24 Part 2 Table 25-C. Use manufacturer's standard clips and other attachment items for positioning and securing lath.

PART 3 - EXECUTION

3.1 EXAMINATION:

Examine wall construction to ensure that insulation, pipes, conduits, ducts, vents, supports and other items that will be concealed by the lath and plaster have been installed, inspected, tested and approved by the authorities having jurisdiction and unsatisfactory conditions have been corrected.

3.2 APPLICATION OF WEATHER RESISTIVE BARRIER:

3.2.1 Apply weather resistive barrier of building paper at vertical surfaces of all exterior walls and of interior partitions where indicated. Over wood base sheathing, apply double layer of building paper except a single layer of building paper may be applied if paper backed metal lath is used. Over gypsum sheathing or open studding, apply single layer of building paper except where paper backed metal lath is used.

3.2.2 Apply building paper with the long dimension running horizontally. Lap horizontal joints at least 2 inches for single layer application and 19 inches for double layer application. Lap upper courses over lower courses. Locate vertical joints over supports and lap not less than 6 inches. Secure paper to framing members at intervals not exceeding 6 inches on center vertically along each framing member.

3.3 APPLICATION OF METAL LATH:

3.3.1 General: Conform to the recommendations of the WLPDIA "Plaster and Drywall Systems Manual" Third Edition, Chapter Two. Install metal lath with true even surfaces without sags or buckles.

3.3.2 Apply metal lath with long dimension at right angles to the supports, shingle fashion. Stagger ends of lath to avoid continuous joint on same support. Lap diamond mesh lath at sides not less than 1/2 inch and not less than 1 inch at ends. Lap edges of rib lath by nesting outside ribs or salvage and lap 1 inch at ends. Lap welded and woven wire lath one full mesh at sides and ends. Lap all ends at supports. Butt lath into internal angles and reinforce angle with cornerite, or extend lath around corners to nearest stud.

3.3.3 Furr out from the supports not less than 1/4 inch except where flange width of metal supports is less than one inch.

3.3.4 Secure lath to supports at intervals not exceeding 6 inches on center using nails or staples for wood framing or furring and self-drilling, self-tapping sheet metal screws or wire tying for metal studs. Tie long edges between supports with wire at intervals not exceeding 9 inches on center. Twist ends of tie wire and bend up in plane of lath.

3.3.5 Apply metal lath to concrete and masonry surfaces using powder driven fasteners of type and size recommended by the fastener manufacturer for the type and thickness of concrete or masonry.

3.3.6 Where lath is attached to horizontal wood supports, apply lath using one of the attachments set forth in CBC Title 24 Part 2 Sec. 2505.3 for interior applications and Sec. 2506.5 for exterior applications, in addition to the methods of attachment set forth in CBC Title 24 Part 2 Table No. 25-C.

3.3.7 Do not install lath continuous behind expansion or control joints.

3.3.8 When paper backed metal lath is used, separate paper and lath at lap joints and lap in such a manner that paper laps paper and lath laps lath. Cut lath at expansion and control joints but extend paper continuously behind expansion and control joints.

3.4 INSTALLATION OF LATHING ACCESSORIES:

3.4.1 General: Set plumb, level and true to line. Shim where necessary. Miter at corners. Accurately and tightly fit exposed joints. Install sections in as long a length as practicable. Fasten by wiring, at not more than 12 inches on center. Secure cornerites at 6 inch intervals at edges only, not in corner.

.1 Corner Beads: On interior plaster work, install for full length of outside corners.

.2 Corner Reinforcement: On exterior plaster work, install for full length of outside corners.

.3 Casing Beads: Install for all free edges, wherever plaster abuts against other finish material, and elsewhere as indicated.

.4 Cornerite Reinforcements: Install at inside corners, except where lath is carried around corners.

.5 Base Screeds: Install at top of base of wainscot and elsewhere as indicated.

.6 Strip Lath: Reinforce corners of openings with 9" by 24" strips of metal lath, tied to reinforcement.

.7 Stress Relief Joints: Lath shall not run continuous behind stress relief joints. If lath has been installed continuous where joints occur, cut and separate reinforcement behind expansion and control joints, however, extend paper backing continuous behind expansion joints. Space joints as indicated, or if not indicated, as approved by the Architect.

.8 Foundation Weep Screeds: Install at bottom of all exterior portland cement plaster and elsewhere as indicated. Install screeds so that the water resistive barrier and lath cover and terminate on the attachment flange of the screed.

3.4.2 Aluminum Moldings: Attach moldings securely to framing with sheet metal screws. Install moldings with tight hairline joints and mitered corners. Install drip screeds so

that the water resistive barrier and lath cover and terminate on the attachment flange of the screed. Remove excess wet plaster from moldings immediately.

END OF SECTION

34-003 – 01/27/2014

SECTION 09220

PORTLAND CEMENT PLASTER

PART 1 - GENERAL

1.1 SUMMARY:

1.1.1 Section Includes: Interior and exterior portland cement plaster work.

1.1.2 Related Documents: The Conditions of the Contract and Division 1 apply to this section as fully as if repeated herein.

1.2 REFERENCES:

The editions of the specifications and standards referenced herein, published by the following organizations, apply to the work only to the extent specified by the reference: Refer to Section 01422 for information concerning availability and use of references.

American Society for Testing and Materials (ASTM)
Portland Cement Association (PCA)
Stucco Manufacturers Association (SMA)

1.3 SUBMITTALS:

1.3.1 Product Data: Submit manufacturer's certificates or other data indicating that materials conform to the standards referenced.

1.3.2 Samples: Submit 12" by 12" samples of each type of finish for review. Reviewed samples shall become the standard of comparison for cement plaster finishes.

1.3.3 Submittal procedures and quantities are specified in Division 1.

1.4 QUALITY ASSURANCE:

1.4.1 Regulatory Requirements: Plaster construction shall meet the requirements of the California Code of Regulations (CCR) Title 24 Part 2, California Building Code, Chapter 25 - Gypsum Board and Plaster. Fire resistive walls, partitions and ceilings shall also conform to CCR Title 24 Part 2 Chapter 7 - Fire-Resistant Materials and Construction.

1.4.2 Mock-Ups: After color and texture samples have been approved and returned, construct a mock-up not less than 16 square feet in size. Use workmen, equipment and techniques proposed for use on the project. The panel may be constructed as a portion of the finished work, provided the approved panel is clearly identified for future reference. The approved panel shall become the standard of comparison for cement plaster finish work for the project.

1.5 DELIVERY, STORAGE, AND HANDLING:

1.5.1 Deliver manufactured materials in the original packages or containers bearing the name of the manufacturer and brand.

1.5.2 Keep cementitious materials dry until used. Keep materials off the ground, under cover, and clear of damp walls or other damp surfaces. Store bulk sand in a well drained area on a solid surface to prevent mixing of foreign matter.

1.6 PROJECT CONDITIONS:

1.6.1 Do not apply plaster when the ambient temperature is below 40 degrees F or when conditions indicate that the ambient temperature may fall below 40 degrees F before plaster is cured. Do not apply plaster during rainy, damp or foggy weather. Protect plaster from uneven and excessive evaporation during hot, dry weather.

1.6.2 Protect adjacent surfaces not indicated to receive plaster, with drop cloths, waterproof paper or other means to maintain them free of plaster splashes, overspray, water or debris.

1.6.3 Cooperate with various other trades in coordinating their work required in conjunction with work under this section.

PART 2 - PRODUCTS

2.1 MATERIALS:

2.1.1 Portland Cement: ASTM C 150, Type I or II.

2.1.2 Plastic Portland Cement: ASTM C 150, Type I or II, except that plasticizing agents may be added in manufacturing process not to exceed 12 percent of the total volume.

2.1.3 Additives and Admixtures:

.1 Lime: ASTM C 206.

.2 Plasticizing or air-entraining agents, when used, shall not reduce the compressive strength of the plaster more than 15 percent below the strength of the plaster without plasticizing or air-entraining.

.3 Other additives and admixtures, when used and when approved by the Architect, shall not reduce the compressive strength, tensile strength, flexural strength, impact strength or resistance to abrasion of the plaster below the strength of the plaster without the additive or admixture.

2.1.4 Sand Aggregate for Basecoats: ASTM C 897.

2.1.5 Plaster for Exterior Finish Coat: Meet the requirements of SMA"Specifications and Standards for Manufactured Stucco Finishes". Acceptable products or equal:

Expo Stucco Products; Exterior Stucco
La Habra Products Inc.; Exterior Color Coat
Omega Products Corp.; Exterior Stucco

.1 Sand contained in premixed stucco shall be silica sand of sieve size necessary to achieve the specified finish texture.

.2 Plaster shall be color selected from manufacturer's standard colors. Each separate color shall be from the same production run. All bags shall be marked to show that materials were bagged from the same production run.

2.1.6 Reinforcing Fibers: Chopped, 1/2 inch long, alkali resistant fiberglass strands specially manufactured for reinforcing portland cement plaster.

2.1.7 Water: Clean, fresh and potable.

2.1.8 Bonding Agents:

.1 Interior Work: ASTM C 631.

.2 Exterior Work: ASTM C 932.

2.2 PROPORTIONS AND MIXING:

2.2.1 Thoroughly mix materials with batch type mechanical mixer for a minimum of 2 minutes, using minimum amount of water to produce proper consistency for application. Proportion materials so that all batches are identical.

2.2.2 Use only clean tools and equipment, free from hardened or partially hardened materials. Do not retemper or use material that has partially set or is caked or lumpy.

2.2.3 Proportions for Scratch and Brown Coats: Scratch and brown coats shall be regular portland cement or portland cement/lime plaster proportioned in accordance with CCR Title 24 Part 2 Table 25-F.

.1 Add minimum 1-1/2 pounds of reinforcing fibers per sack of cement to both scratch and brown coats.

2.2.4 Thoroughly mix portland cement plaster for basecoats in the proportions specified above, with only sufficient water to attain proper consistency for application. When plastic portland cement is used, no lime or other plasticizing agents shall be added at the job site. Proper consistency for machine applied portland cement plaster may be determined by slump test. Material for slump test shall be taken from nozzle of plastering machine hose. Maximum allowable slump shall be 2-1/2 inches using a 2" by 4" by 6" slump cone.

2.2.5 Finish Coat: Factory sacked plaster shall be thoroughly mixed at project site with water to the proper consistency to achieve the approved finish texture.

PART 3 - EXECUTION

3.1 EXAMINATION:

Examine base surfaces and accessories to insure that the finished plaster surfaces will be true, level and plumb without requiring additional thickness of plaster. Verify that concrete and masonry are free of dust, loose particles, oil and other foreign matter which would adversely affect the bond of plaster coats.

3.2 SURFACE PREPARATION:

Apply a bonding agent to concrete and masonry before application of plaster. Apply the bonding agent in accordance with the manufacturer's instructions.

3.3 APPLICATION OF PLASTER:

3.3.1 General: Over metal lath apply plaster in 3 coats to a thickness of not less than 7/8 inch. Over exterior concrete and masonry apply plaster in 2 coats to a thickness of 1/2 inch except where skim coat is indicated apply plaster in one coat to a thickness of 1/8 inch. Finish interior and exterior plaster plumb, true and even within a 1/4 inch tolerance in 5 feet.

3.3.2 Application of Base Coats:

.1 Scratch coat shall be applied in a full 3/8 inch coat with sufficient material to form good keys on metal lath. Embed and fill all spaces of lath and score horizontally. Keep moist for 48 hours before second coat is applied.

.2 Brown coat shall be applied over the dampened scratch coat in a full 3/8 inch coat. Brown coat shall be brought out to grounds, straightened to a true surface and left sufficiently rough to assure adequate bond for finish. Keep moist for 48 hours and then let dry.

.3 On vertical surfaces, cold joints in brown coat shall not occur over cold joints in scratch coat. Surface shall be free from imperfections which may reflect in the finish coat.

.4 Provide scratch coats behind all wall mounted ceramic tile indicated or specified to be installed in a conventional portland cement setting bed. Refer to Section 09310. Finish brown coat shall level to within a tolerance of 1/8 inch in 10 feet.

3.3.3 Finish Application:

.1 Finish coat shall be applied not sooner than 7 days after application of brown coat. Dampen surface of brown coat to obtain uniform suction immediately before applying finish coat.

.2 Scraped Texture Finish: Apply finish coat approximately ¼ inch thick and allow to take up until surface moisture leaves. Scrape vertically with a steel joint rod or trowel held at right angles to the plane of the wall. Remove sufficient material to leave a torn surface free from smooth spots and joinings.

.3 Textures shall be in accordance with the WLPDIA "Plaster Textures."

.4 When practical and weather conditions are favorable, complete both coats on the same day, the second following the first when the first is sufficiently firm to receive the second coat.

3.4 PATCHING AND CLEANUP:

3.4.1 Remove plaster droppings immediately after each coat has been applied.

3.4.2 Before painting operations, patch defective work. Cut out broken or damaged plaster to straight lines with clean, sharp edges. Cut out cracks to width of not less than 1 inch. Fill areas to be patched with base material. Apply a finish coat of same material as adjoining plaster. Patched areas shall match adjoining work in finish and texture; joinings flush and smooth, so that joints between existing and new plaster will be invisible.

3.4.3 Remove plaster from beads, screeds, base and trim.

END OF SECTION

34-003 – 01/27/2014

SECTION 09250

GYPSUM BOARD

PART 1 - GENERAL

1.1 SUMMARY:

1.1.1 Section Includes: Gypsum board construction complete with accessories.

1.1.2 Related Documents: The Conditions of the Contract and Division 1 apply to this section as fully as if repeated herein.

1.1.3 Related Work:

.1 Non-load-bearing steel framing is specified in Section 09100.

1.2 REFERENCES:

The editions referenced herein of specifications and standards published by the following organizations, apply to the work only to the extent specified by the reference. Refer to Section 01422 for information concerning availability and use of references.

American Society of Testing and Materials (ASTM)
Gypsum Association (GA)
Western Lath/Plaster/Drywall Industries Association (WLPDIA)

1.3 SUBMITTALS:

1.3.1 Product Data: Submit product data for each type of product specified.

1.3.2 Certificates: Submit manufacturer's certification that products meet or exceed requirements of the referenced specifications.

1.3.3 Submittal procedures and quantities are specified in Division 1.

1.4 QUALITY ASSURANCE:

1.4.1 Gypsum Board Construction: Meet the requirements of the California Code of Regulations (CCR) Title 24 Part 2, California Building Code, Chapter 25 - Gypsum Board and Plaster.

1.4.2 Fire-Resistive Construction: Meet the requirements of CCR Title 24 Part 2 Chapter 7 - Fire-Resistant Materials and Construction. Provide fire-resistance rated assemblies identical to those in Chapter 7 of the CCR Title 24 Part 2 or in listing of other testing agencies acceptable to the local building official.

1.4.3 Fire Resistive Gypsum Board: Bear the Underwriter's Laboratories Inc. (UL) label or label of another organization acceptable to the local building official. .

1.4.4 Sound Transmission Characteristics: For gypsum board assemblies with STC ratings, provide materials and construction identical to those of assemblies whose STC ratings were determined according to ASTM E 90 and classified according to ASTM E 413 by a qualified independent testing agency.

1.4.5 Field Samples: On actual gypsum board surfaces, prepare field samples of at least 100 square feet in surface area for the applications listed below. Simulate finished lighting conditions for review of in-place unit of work.

.1 Wall surfaces indicated or specified for non-textured finish.

.2 Ceiling surfaces indicated or specified for non-textured finish.

.3 Surfaces indicated or specified to receive textured finish.

1.5 DELIVERY, STORAGE, AND HANDLING:

1.5.1 Deliver gypsum board and accessories in the manufacturer's original unopened containers, bundles or rolls bearing the manufacturer's name and brand designation.

1.5.2 Store materials inside the building or in other dry weather tight enclosure. Stack gypsum board flat and off the floor. Do not stack long lengths over shorter lengths.

1.5.3 Store flammable adhesives away from fire, sparks and smoking areas.

1.5.4 Handle gypsum board to prevent damage to edges, ends, and surfaces.

1.6 PROJECT CONDITIONS:

1.6.1 Maintain temperature range between 55 degrees F and 70 degrees F for a period extending from 24 hours before installation until the permanent heating system is in operation. Provide ventilation during and following adhesive and joint treatment application. Use temporary air circulators in enclosed areas lacking natural ventilation.

1.6.2 Do not apply gypsum board until insulation, pipes, conduits, ducts, vents, supports and other items that will be concealed by the gypsum board have been inspected, tested and approved by the governing authorities and unsatisfactory conditions have been corrected.

PART 2 - PRODUCTS

2.1 MANUFACTURERS:

Acceptable manufacturers, or equal:

Domtar Gypsum.
Georgia-Pacific Corp.
National Gypsum Co.; Gold Bond Building Products Division.
United States Gypsum Co.

2.2 MATERIALS:

2.2.1 Gypsum Board: Conform to the following standards.

.1 Regular Gypsum Board: ASTM C 36, Type X with tapered edges, 5/8 inch thick.

.2 Fire Retardant Gypsum Board: ASTM C 36, Type X, with tapered edges, 5/8 inch thick unless otherwise indicated.

.3 Foil Backed Gypsum Board: ASTM C 36 with tapered edges, 5/8 inch thick unless otherwise indicated.

.4 Water Resistant Gypsum Board: ASTM C 630 with tapered edges, 5/8 inch thick unless otherwise indicated.

.5 Fire Retardant, Water Resistant Gypsum Board: ASTM C 630, Type X, with tapered edges, 5/8 inch thick unless otherwise indicated.

.6 Backing Board: ASTM C 442, with square edges, 5/8 inch thick unless otherwise indicated.

.7 Fire Retardant Backing Board: ASTM C 442, Type X, with square edges, 5/8 inch thick unless otherwise indicated.

.8 High Impact Gypsum Board: ASTM C 1629 with tapered edges, 5/8 inch thick unless otherwise indicated.

2.2.2 Wood Fiber Sound Board: Cellulosic cellulose fiber insulating board meeting the requirements of ASTM C 208, 1/2 inch thick, 0.82 pounds per square foot density, Sound Deadening Grade. Acceptable product or equal:

Celotex Corp.; Soundstop

2.2.3 Screws: Conform to the standards specified below for attaching gypsum board to the various substrates listed.

.1 Metal Framing, 20 Gage and Heavier: ASTM C 954.

.2 Metal Framing and Furring, 25 Gage: ASTM C 1002, Type S.

.3 Wood Framing: ASTM C 1002, Type W.

.4 Gypsum Backing Board: ASTM C 1002, Type G.

2.2.4 Nails for Attaching Gypsum Board to Wood Framing: ASTM C 514.

2.2.5 Resilient Channels: Fabricate resilient furring members in accordance with ASTM C 645, from hot dip zinc coated steel minimum 0.0179 inch thick. Provide manufacturer's special type designed to reduce sound transmission. Acceptable products or equal:

Gold Bond Building Products; Resilient Furring Channels
U.S. Gypsum Co.; RC-1 Resilient Channels

2.2.6 Metal Trim: ASTM C 1047, fabricated from hot-dip zinc-coated sheet steel.

2.2.7 Taping and Finishing Materials: ASTM C 475, all purpose type.

.1 Joint Tape: Paper reinforcing tape.

.2 Joint Compound: Factory-packaged vinyl-based, ready-mixed formulation, all-purpose type formulated for both taping and topping compounds.

2.2.8 Acoustical Sealant: Specified in Section 07900.

2.2.9 Laminating Adhesive: Special adhesive or joint compound recommended for laminating gypsum panels.

PART 3 - EXECUTION

3.1 EXAMINATION:

Before applying gypsum board ensure that corners and framing are plumb, true and solid and that framing members are properly spaced. Edges and ends of board shall have solid bearing. Do not start work until deficiencies have been corrected. Start of work of this section constitutes acceptance of the surfaces.

3.2 INSTALLATION OF GYPSUM BOARD:

3.2.1 Applications:

.1 Use water resistant gypsum board within toilets, and elsewhere as indicated.

.2 Use backing board or regular gypsum board for base layer for 2 layer applications. Use Type X backing board or Type X gypsum board where required for fire rating.

.3 Use fire retardant gypsum board where indicated or required to achieve fire rated partitions and ceilings.

.4 Use foil backed gypsum board for metal framed or furred exterior walls insulated with unfaced batt insulation.

.5 Use Type X or regular gypsum board in all locations not otherwise indicated or specified.

3.2.2 General: Install and finish gypsum boards to comply with ASTM C 840 and GA-216.

.1 Use gypsum board of maximum practicable lengths to minimize end joints. Stagger end joints when they occur. Locate end joints as far as possible from the center of walls and ceilings.

.2 Install gypsum boards in moderate contact, without forcing them in place. Do not place square or cut ends or cut edges against tapered edges.

.3 Except for face layer of double layer construction, support ends and edges of gypsum boards on framing or furring members. Joints on opposite sides of the same partition shall not occur on the same stud.

.4 Cover both faces of steel stud partition framing with gypsum board in concealed spaces above ceiling where required for sound, fire, air, or smoke ratings.

.5 Floating Construction: Where feasible, including where recommended by manufacturer, install gypsum board over wood framing with floating internal corner construction.

3.2.3 Fastening: Locate fasteners not less than 3/8 inch nor more than 1/2 inch from edges and ends of gypsum board. Drive fasteners perpendicular to the gypsum board surface with heads set slightly below the gypsum board surface for finish layers and even with the surface for base layers. Attach gypsum board starting from the center of each panel and proceeding toward the outer edges. Fasten gypsum board in place with screws over metal framing and with nails or screws over wood framing.

3.2.4 Sound Rated Partitions: Where sound rated partitions are indicated, seal construction at perimeters, behind control and expansion joints, openings, and penetrations with a continuous bead of acoustical sealant including a bead at both faces of partitions. Acoustical sealant specified in Section 07900. Comply with ASTM C 919 and manufacturer's recommendations for location of edge trim and closing off sound-flanking paths around or through gypsum board assemblies, including sealing partitions above acoustical ceilings.

3.2.5 Nonrated Single Layer Construction:

.1 Apply gypsum board with the long dimension at right angles to ceiling framing and [at right angles or] parallel to wall framing members. Use maximum-length panels to minimize end joints.

.2 Apply ceiling panels before wall/partition board application to the greatest extent possible.

.3 Attach gypsum board with screws spaced 12 inches on center for ceilings and 16 inches on center for walls. Use 1 inch long screws for metal framing and furring and 1-1/4 inch long screws for wood framing.

3.2.6 Rated Fire Resistive Partitions: Install and fasten gypsum board in accordance with CCR Title 24 Part 2 Table 7-B.

3.2.7 Resilient Channels: Install resilient channels at right angles to the framing members. Attach channels through alternate flanges at each framing member with nails or screws. Nails shall be 1-1/4 inch GWB-54 type. Screws shall be 1 inch long for metal framing and 1-1/4 inch long for wood framing. Splice channels by nesting directly over framing members and attaching through each resilient channel flanges with one fastener.

3.2.8 Metal Trim: Attach corner and edge trim and control joints with screws spaced not more than 9 inches on center.

.1 Install the gypsum board metal corner trim where indicated and at vertical and horizontal external corners and angles.

.2 Install metal edge trim where indicated and at junctions of gypsum board and walls of other materials and where there are exposed edges.

.3 Provide control joints where indicated on the drawings. If no control joints are indicated, provide joints to ensure that unbroken wall surfaces are limited to 30 feet in length and unbroken ceiling surfaces are limited to 2500 square feet or 50 feet in either direction.

3.2.9 Edge Sealing: Cut edges, utility holes, and joints of water resistant gypsum board shall be treated with the gypsum board manufacturer's recommended waterproof sealant before installation.

3.2.10 Tolerances: Gypsum board surfaces shall have a maximum variation of 1/8 inch in 10 feet when a straight edge is laid on the surface in any direction and no measurable variation in any 2 foot direction.

3.2.11 Wood Fiber Sound Board: Locate fasteners not less than 3/8 inch nor more than 1/2 inch from edges and ends of board. Drive fasteners perpendicular to the board

surface with heads set even with the surface. Attach board starting from the center of each panel and proceeding toward the outer edges. Fasten in place with screws.

3.3 TAPING AND FINISHING:

3.3.1 Tape and finish joints, corners, fastener heads, and other imperfections in accordance with the manufacturer's specifications and recommendations to provide a smooth finish.

3.3.2 Reinforce joints, wall and ceiling angles, and inside vertical corners with tape embedded in joint compound. Finish joints with not less than 2 applications of joint compound, allowing each application to dry thoroughly and sanding between coats as required.

3.3.3 Levels of Gypsum Board Finish: Provide the following levels of gypsum board finish in accordance with GA-214.

.1 Level 1: Provide for concealed areas, unless a higher level of finish is required for fire-resistive-rated assemblies and sound-rated assemblies. Where Level 1 gypsum board finish is indicated or specified, apply joint compound for embedding coat. Remove excess joint compound.

.2 Level 2: Provide for gypsum board substrates for ceramic tile, acoustical tile or other panel application. Where Level 2 gypsum board finish is indicated or specified, apply joint compound for first coat in addition to embedding coat. Remove excess joint compound.

.3 Level 3: Not Used.

.4 Level 4: Provide for gypsum board surfaces indicated to receive light orange peel or light-textured finishes before painting, or to receive wall coverings. Where Level 4 gypsum board finish is indicated or specified, embed tape in finishing compound plus 2 separate coats applied over joints, inside angles, fastener heads, and accessories using ready-mixed, drying type, all-purpose taping compound. Feather out third coat approximately 6 inches from center of joint. After drying, sand or otherwise treat each coat and after last coat of the compound to provide a smooth even surface.

.5 Level 5: Not Used.

3.3.4 Treat external corners, edges, and ends with metal beads and edge trim. Finish with 3 coats of joint compound and feather out between 8 inches and 10 inches from the nose.

3.3.5 The final application of compound and sanding shall leave all gypsum board surfaces uniformly smooth and in condition to receive specified finish.

3.4 REPAIR, CLEAN-UP AND PROTECTION:

3.4.1 Repair fastener pops by driving a new fastener approximately 1-1/2 inches from the fastener pop and reset the popped fastener. When face paper is punctured, drive a new fastener approximately 1-1/2 inches from the defective fastener. Fill damaged surfaces with compound.

3.4.2 Upon completion of the work, remove from adjacent surfaces, overspray, splatter and daubs of taping and finish compound and textured finishes. Remove tools, equipment, unused material and cuttings and leave the work in a clean orderly manner.

END OF SECTION

34-003 – 01/27/2014

SECTION 09310

CERAMIC TILE

PART 1 - GENERAL

1.1 SUMMARY:

1.1.1 Section Includes: Ceramic floor, and wall tile work, including related accessories, marble thresholds, cementitious backer board, waterproofing, mortar and grout.

1.1.2 Related Documents: The Conditions of the Contract and Division 1 apply to this section as fully as if repeated herein.

1.2 REFERENCES:

The editions of the specifications and standards referenced herein, published by the following organizations, apply to the work only to the extent specified by the reference. Refer to Section 01422 for information concerning availability and use of references.

American National Standards Institute (ANSI)
American Society for Testing and Materials (ASTM)
Tile Council of America (TCA)

1.3 SUBMITTALS:

1.3.1 Product Data: Submit manufacturer's data on manufactured mortars and grouts including instructions for mixing and applying.

1.3.2 Samples: Where colors and patterns are not specified, submit one set of samples of each type of tile specified showing the manufacturer's full range of standard colors and patterns for final selection. Where colors and patterns are specified submit 4 samples of each color type and shape of tile and trim.

1.3.3 Submittal procedures and quantities are specified in Division 1.

1.4 QUALITY ASSURANCE:

Requirements for Physically Disabled: Provide ceramic tile flooring meeting the slip resistant requirements of California Code of Regulations (CCR) Title 24 Part 2; and ADA Accessibility Guidelines for Buildings and Facilities, dated June 26, 1991 as amended April 5, 1993 and January 18, 1994, and July 2004.

1.5 DELIVERY, STORAGE AND HANDLING:

1.5.1 Delivery:

.1 Deliver tile, cement, lime, mortar and grout to the project site in unopened containers, labeled with the manufacturer's name and brand designation.

.2 Grade seal tile cartons by the manufacturer in accordance with ANSI A137.1.

.3 Include hallmarks on labels for dry set and latex mortars certifying compliance with ANSI A118.1 and A118.4 respectively.

1.5.2 Storage: Store tile and cementitious materials in dry, weather tight enclosures. Store sand in a well drained area on a solid surface to prevent mixing with foreign matter.

1.6 PROJECT CONDITIONS:

Set and grout tile when the temperature is at least 50 degrees F and rising and temperature of the substrate does not exceed 100 degrees F.

PART 2 - PRODUCTS

2.1 MATERIALS:

2.1.1 Ceramic Tile: "Standard" grade units meeting the requirements of ANSI A137.1. Deliver tile in sealed cartons, identified with a Master Grade Certificate, on standard form of the Tile Council of America, certifying grades, type and qualities of tile furnished.

.1 Porcelain Wall Tile: Provide in sizes, patterns, and colors as indicated on Drawings.

.2 Glazed porcelain Floor Tile: Provide in sizes, patterns, and colors as indicated on Drawings. Floor tile shall have a coefficient of friction equal to, or greater than, 0.6.

.3 Accessories: Provide all trim necessary to produce bases. Provide trim matching wall tile in color and texture unless otherwise noted. Provide aluminum wainscot cap trip as indicated on Drawings, Schleuter or equal.

2.1.2 Mortar, Setting Bed, and Grouting Materials:

.1 Cement: ASTM C 150, Standard Type I or II portland cement, low alkali.

.2 Lime: ASTM C 207, Type S, hydrated.

.3 Sand: ASTM C 144, natural sand, clean and graded.

.4 Water: Fresh, clean and potable, and free from such amounts of mineral and organic substances as would adversely affect the hardening of cement mortar.

.5 Reinforcing Wire Fabric: ASTM A 185 or ASTM A 497, 2 by 2 inch fabric, 16/16 wire, 3 by 3 inch fabric, 13/13 wire or 1.5 by 2 inch fabric, 16/13 wire.

.6 Cleavage Membrane: One of the following:

a. Polyethylene Sheeting: ASTM C 171, 4 mils thick

b. Roofing Felt: ASTM D 226, 15 pound type.

c. Reinforced Asphalt Paper, Duplex Type: ASTM C 171.

.7 Dry Set Mortar: ANSI A118.1.

.8 Latex Portland Cement Mortar: ANSI A118.4. Provide acrylic type latex for exterior applications.

.9 Commercial Portland Cement Grout: ANSI A118.6, factory sanded, color as indicated.

.10 Dry Set Grout: ANSI A118.6, sanded or unsanded as specified, color as indicated.

.11 Latex Additive for Grout: ANSI A118.6. Provide acrylic type latex for exterior applications.

2.1.3 Thresholds: Provide marble thresholds having rounded corners and a sand rubbed finish.

2.1.4 Cementitious Backer Units: Concrete glass fiber reinforced, 7/16 to ½ inch thick prefabricated panel, consisting of aggregate and portland cement reinforced with vinyl-coated woven glass-fiber mesh embedded in both surfaces. Acceptable products or equal:

Glass Crete, Inc.; Wonder-Board
Modulars, Inc.; Wonder-Board
U.S.G. Industries, Inc.; Durock Tile Backer Board

.1 Glass Fiber Tape: Coated glass fiber tape 2 inches wide as recommended by glass mesh mortar units.

2.2 MIXES:

2.2.1 Portland Cement Mortar Setting Beds: Proportion and mix mortar for setting beds in accordance with ANSI A108.1.

2.2.2 Dry-Set and Latex Portland Cement Mortar Setting Beds: Mix mortar in accordance with ANSI A108.5 and the manufacturer's instructions.

2.2.3 Dry Set and Commercial Portland Cement Grouts: Mix grout in accordance with ANSI A108.10 and the manufacturer's instructions.

2.2.4 Sand-Portland Cement Grout: Proportion and mix grout in accordance with ANSI A108.10.

2.2.5 Latex-Portland Cement Grout: One of the grouts specified above mixed in accordance with ANSI A108.10 and the latex manufacturer's instructions.

PART 3 - EXECUTION

3.1 EXAMINATION:

3.1.1 Examine floor substrates to receive tile, setting beds and accessories before tile installation begins to assure that substrates are level or uniformly sloped to drain within 1/4 inch in 10 feet for portland cement mortar method and 1/8 inch in 10 feet for dry set or latex portland cement mortar methods.

3.1.2 Examine wall substrates to receive tile, setting beds and accessories before tile installation begins to assure that substrates are plumb and in a true plane within 1/4 inch in 8 feet for portland cement mortar method and 1/8 inch in 8 feet for dry set or latex portland cement mortar methods.

3.1.3 Make sure grounds, anchors, plugs, hangers, bucks, and floor drains to be built into the tile have been installed.

3.1.4 Check to assure that waterproof membranes and rough-ins for plumbing, mechanical and electrical work behind the tile have been installed and tested.

3.1.5 Do not proceed with installation of tile work until such deficiencies have been corrected.

3.2 WATERPROOF MEMBRANE INSTALLATION:

3.2.1 Apply one of the following types of thin set waterproofing membranes extended at least 6 inches up on side walls.

.1 Glass Fiber Fabric Reinforced Latex Membrane: Apply a liberal coat of latex mastic to concrete with a trowel, brush, or roller. While mastic is still wet, unroll glass fiber fabric onto the coated surface lapping seams at least 2 inches. Apply a second coat of mastic so as to completely cover and seal the fabric. Allow the membrane to cure overnight or until it is sufficiently hard to take foot traffic before installing tile in latex portland cement mortar.

.2 Polyurethane Membrane: At intersections with walls, trowel on a 30 mil flashing coat of polyurethane material extending 5 inches on each side of the intersection. Promptly embed woven glass fiber fabric and trowel on a second 30 mil thickness of polyurethane material. After 48 hours, trowel on a 30 mil thickness of polyurethane material over as much area as can be tiled promptly. Set tile firmly in the regular manner and beat it into the ribs of waterproofing material. Maintain a

continuous coating from one working area to the next to ensure continuity of the waterproof membrane.

.3 Chlorinated Polyethylene Membrane: Install sheet membrane in latex portland cement mortar mixed to the consistency recommended by the sheet membrane manufacturer. Roll the sheet into the mortar using a rubber covered roller or other means that will not damage the membrane and will achieve 100 percent coverage of the substrate and full penetration of the mortar into the fabric facing on the sheet membrane. Turn the membrane up the wall not less than 6 inches and cut and fold the corners as recommended by the sheet manufacturer. Extend sheet membrane into clamping of floor drains and seal with manufacturer's recommended sealant.

3.3 CEMENTITIOUS BACKER UNIT INSTALLATION:

3.3.1 Install horizontally, with end joints over framing members. Secure to each framing member with screws spaced not more than 8 inches on center and not closer than 3/8 inch from the edge. Install screw heads flush with the surface of the board.

3.3.2 Joint Treatment: Fill all horizontal and vertical joints and corners with dry-set portland cement, or latex-portland cement mortar. Apply glass fiber tape over joints and corners and embed with same mortar.

3.4 TILE INSTALLATION:

3.4.1 Lay out tile work so that, as far as possible, no tile less than half full size occurs. Lay floors out from center lines of rooms so that all major adjustments are made at walls. Lay out tiles on walls so that fields and patterns center on floor tile.

3.4.2 Cut and drill without marring the tile. Rub cuts smooth with a fine abrasive stone. Set no cut edge against fixtures, cabinets, or other tile without a joint at least 1/16 inch wide. Whenever possible, turn cut edges away from the adjoining wall. Fit tile around electric outlets, plumbing pipes, fixtures and fittings close enough to permit standard plates and collars to overlap the tile.

3.4.3 Keep tile dry while in packages. Take precautions to prevent staining of tiles before they are set. Do not install stained tile.

3.4.4 Floor Tile:

.1 Install tile over the waterproof membrane specified herein, using thin-set mortar method in accordance with ANSI A108.5 and TCA Handbook Detail F104.

3.4.5 Wall Tile:

.1 Install wall tile using the dry-set mortar or latex portland cement mortar methods in accordance with ANSI A108.10 and TCA Handbook Detail W244.

3.4.6 Apply grout in accordance with ANSI A108.10. Use latex modified commercial portland cement grout for interior floor applications. For interior wall applications, use dry-set grout unsanded for joint widths of 1/8 inch and narrower and sanded for joints greater than 1/8 inch. Force a maximum of grout into all joints. Grout joints full and integral with setting bed. Before grout sets, strike or tool the joints of cushion edge tile to depth of cushion, filling gaps; and with square-edged tile, fill joints flush with their surface.

3.5 EXPANSION JOINTS:

3.5.1 Expansion and Control Joints: Provide expansion and control joints in tile work where indicated. Where joint locations are not indicated, provide joints spacing in accordance with TCA Handbook Detail EJ171. Submit plan showing location of joints for approval. Construct joints in accordance with TCA Handbook Detail EJ171 and as follows:

.1 Before grouting, keep joints open and clean by stuffing with paper or other material to prevent filling with dirt, grout, or mortar.

.2 After tile is grouted and completely dry, remove paper or other temporary filler material; brush joints clean and fill with back-up material, or bond breaker tape, and sealant as specified in Section 07900.

3.6 CLEANING AND CURING:

3.6.1 Clean off excess grout before it has fully set using clean sponges and water. Sponge and wash tiles thoroughly and then polish with clean, dry cloths. Use no acids or abrasive soaps on tile, except as approved by tile manufacturer. If difficulty is encountered in removing grout or grout films use tile cleaner as recommended by the grout manufacturer with a nylon scrubbing pad. Replace ceramic tile having stains or discolorations that are not removable with clean water or tile cleaner.

3.6.2 Apply non-staining laminated and reinforced kraft paper having a bituminous or latex binder over floor tile as soon as grouting, pointing and cleaning is completed. Lap the sheets at least 4 inches and seal the laps against the escape of moisture. Leave curing paper in place until job is ready for final cleaning, at least 7 full days. Keep traffic off floors during the curing period, 3 days.

END OF SECTION

34-003 – 01/27/2014

SECTION 09546

LINEAR METAL CEILING SYSTEM

PART 1 GENERAL

1.1 RELATED DOCUMENTS

A. Drawings and general provisions of the Contract, including General and Supplementary Conditions and Division 1 Specification Sections, apply to this Section.

1.2 SUMMARY

A. Section Includes:

1. Perforated and un-perforated metal ceiling panels

2. Acoustical backing

3. Suspension assemblies

4. Accessories; provide other necessary items including devices for attachment overhead construction, secondary members, splines, splices, connecting clips, wall connectors, wall angles, and other devices required for a complete installation.

5. Supplemental support framing: Provide fully engineered secondary framing as required to meet code, conforming to layout shown in drawings, to support direct-hung metal ceilings suspension system.

6. Coordinate layout and installation of items penetrating or being installed in ceiling systems with responsible trades.

B. Related Sections / Work:

1. Sections 05400 – Cold-Formed metal Framing

2. Sections 09900 – Paintings and Coatings

6. Division 26 - Electrical

C. Alternates: No Substitutions

D. This Section covers the general requirements only for Acoustical Metal Ceilings as shown on the drawings. The supplying and installation of additional accessory feature and other items not specifically mentioned herein, but which are necessary to make a complete installation shall also be included or clarified accordingly.

E. Qualification Data**:**

1. Test Reports: Certified reports from independent agency substantiating structural compliance to windloads and other governing requirements.

2. Certificates:

   a. Data substantiating manufacturer and installer qualifications.

   b. Certified data attesting fire rated materials comply with specifications.

3. Manufacturer's Instructions: Detailed installation instructions and maintenance data.

1.3 REFERENCES

A. American Society for Testing and Materials (ASTM)

1. E 84 – "Standard Test Method for Surface Burning Characteristics of Building Materials"

2. E 488 – "Standard Test Methods for Strength of Anchors in Concrete and Masonry Elements"

3. B 209 – "Standard Specification for Aluminum and Aluminum Alloy Sheet and Plate"

4. C 423 – "Sound Absorption and Sound Absorption Coefficients by Reverberation Room Method"

5. E 580 – "Standard Practice for Application of Ceiling Suspension Systems for Acoustical Tile and Lay-in Panels in Areas Requiring Moderate Seismic Restraint"

6. C 635 – "Standard Specification for Metal Suspension Systems for Acoustical Tile and Lay-in Panel Ceilings"

7. C 636 – "Recommended Practice for Installation of Metal Ceiling Suspensions Systems for Acoustical and Lay-in Panels"

8. A 641 – "Standard Specification for Zinc-Coated (Galvanized) Carbon Steel Wire"

9. A 653 – "Standard Specification for Steel Sheet, Zinc-Coated (Galvanized) or Zinc-Iron Alloy Coated (Galvannealed) by the Hot-Dip process.

10. E 1264 – Classification for Acoustical Ceiling Products"

11. E 1477 – Standard Test Method for Luminous Reflectance factor of Acoustical Materials by use of Integrating-Sphere Reflectometers"

12. D 1044 – Practice for Abrasion Resistance

13. D 1002 – Practice for Adhesion Resistance

1.4 SUBMITTALS

A. Product Data: Manufacturer's published literature, including specifications.

B. Product Certification: Manufacturer's certifications that products comply with specified requirements and governing codes including product data, laboratory test reports and research reports showing compliance with specified standards.

D. Shop Drawings: Submit shop drawings for reflected ceiling plans (RCP's), drawn to scale, and indicating penetrations and ceiling mounted items. Show the following details:

1. Reflected Ceiling Plan(s): Indicating metal ceiling layout, ceiling mounted items and penetrations.

2. Suspension System, Carrier and Component Layout.

3. Details of system assembly and connections to building components.

E. Samples for Verification: Full-size units (or as specified below) of each type of ceiling assembly indicated; in sets for each color, texture, and pattern specified, showing the full range of variations expected in these characteristics. Submit samples for each type specified.

1. 11-inch square metal panel units.

2. 11-inch long samples of each exposed molding or trim.

3. 11-inch long samples of each suspension component.

1.5 QUALITY ASSURANCE

A. Manufacturer/Installer Qualifications:

1. Provide metal ceiling system components produced by a single manufacturer with a minimum 5 years experience in actual production of specified products and with resources to provide consistent quality in appearance and physical properties, without delaying the work.

2. Provide suspension system components produced by a single manufacturer to provide compatible components for a complete metal ceiling system installation.

3. Perform installations using a firm with installers having no less than 3 years of successful experience on projects of similar size and requirements.

B. Regulatory Requirements:

1. Fire Rating Performance Characteristics: Install system to provide a flame spread of 0 - 25, complying with certified testing to ASTM E 84.

2. Structural Criteria: Install and certify system to comply with structural and wind load requirements of governing codes.

3. Installation Standard for Suspension System: Comply with ASTM C 636.

C. Mock-Up: Prior to beginning installation erect a mock-up section, where directed, using all system components.

D. Pre-installation Conference: Conduct a conference, prior to start of installation, to review system requirements, shop drawings, and all coordination needs.

1.6 DELIVERY, STORAGE AND HANDLING

A. Deliver system components in manufacturer's original unopened packages, clearly labeled.

B. Store components in fully enclosed dry space. Carefully place on skids, to damage from moisture and other construction activities.

C. Handle components to prevent damage to surfaces and edges, and to prevent distortion and other physical damage.

1.7 PROJECT CONDITIONS

A. Begin system installations only after all wet work and overhead work have been completed.

B. Follow manufacturer's printed instructions for exterior installation.

1.8 WARRANTY

A. Provide specified manufacturer's warranty against defects in workmanship, discoloration, or other defect considered undesirable by the Architect or Employer.

B. This warranty shall remain in effect for a minimum period of one (1) year from date of initial acceptance.

1.9 MAINTENANCE & EXTRA MATERIALS

A. Maintenance Instructions: Provide manufacturers standard maintenance and cleaning instructions for finishes provided.

B. Extra Materials: Furnish extra materials described below that match products installed, are packaged with protective covering for storage, and are identified with labels describing contents. Only typical system components are included with attic stock.

1. Acoustical Metal Ceiling Pan Units: Full-size units equal to 2 percent (2%) of amount installed of each Pan Unit profile.

2. Ceiling Suspension System Components: Quantity of each grid and exposed component equal to 2 percent (2%) of amount installed.

PART 2 PRODUCTS

2.1 MANUFACTURER

A. Provide "Luxalon" MULTI-BOX Linear metal ceiling system manufactured by Hunter Douglas Architectural Products, Inc., 5015 Oakbrook Parkway, Suite 100, Norcross, GA 30093, USA. Ph. (800) 366-4327.

2.2 MATERIALS

A. Linear panels for exterior installations:

B. Panel Profile Type: An array selected from the Box Series profiles, utilizing Universal Carrier. Panels roll formed**, .**025" inch thick aluminum with square edges.

1. Panel length: 3' minimum – 16' maximum.

2. Closure: Flat Recessed Closure: 5/8 inch wide roll-formed aluminum hat-shaped closure panel to snap-fit between ceiling panels; black finish

3. Panel Profile Types: Perforated and Non-perforated

C. Panel Finish

1. Paint: Decorated Wood Finish no. 8451 'Warm Maple'.

a. Applied Polyester

b. Powder coat (.032" exterior)

2.3 METAL SUSPENSION SYSTEMS, GENERAL

A. Carrier: Universal hat shaped, .038 inch roll-formed aluminum section with hook shaped tabs spaced to receive ceiling panels at 2 inch on center and 27/32 inch apart. Support holes spaced 4 inch on center. Finish: Factory applied black enamel. Provide custom radius carriers in profiles as required for canopy ceiling install as shown in the Drawings.

B. Hanger Wire: 12 gage galvanized carbon steel hanger wire where applicable.

C. Seismic / Wind resistant Ceiling Framing: Attach carriers to rigid ceiling framing as detailed in the Drawings and as required to resist seismic and wind loads.

2.4 ACCESSORY MATERIALS

A. Panel Splice: Formed aluminum insert designed to snap-fit between ends of two ceiling panels.

1. Finish: Black

B. Access Door: 2 feet x 2 feet aluminum access frame with hinges and retainer clip for downward acting access panel to plenum space. See Drawings for locations.

C. Acoustical Blankets: 1 inch thick, 1 1/2 pcf fiberglass, encapsulated in black polybag.

1. NRC Rating: .70

E. Lighting Fixtures: Provide fixtures capable of being fully integrated with ceiling system and requiring no interruption of ceiling components, that are independently suspended, and as selected to conform to lighting criteria specified in Division 26.

PART 3- EXECUTION

3.1 EXAMINATION

A. Examine substrates and structural framing to which acoustical metal panels attach or abut, with Installer present, for compliance with requirements specified in this and other Sections that affect installation and anchorage, and other conditions affecting performance of metal panel ceilings.

B. Proceed with installation only after unsatisfactory conditions have been corrected.

3.2 PREPARATION

A. Coordination: Furnish layouts for cast-in-place anchors, clips, and other ceiling anchors whose installation is specified in other Sections.

B. Measure each ceiling area and establish layout of acoustical metal pan units to balance border widths at opposite edges of each ceiling. Avoid using less-than-half-width units at borders, and comply with layout shown on reflected ceiling plans.

C. Survey substrate for wall attachment to assure squareness and proper elevation for wall panel installation.

3.3 INSTALLATION

A. General: Install acoustical metal pan ceilings, per manufacturers shop drawings provided, per manufacturer's written instructions and to comply with publications referenced below.

1. CISCA "Ceiling Systems Handbook.

2. Standard for Ceiling Suspension System Installations - ASTM C 636.

3. Standard for Ceiling Suspension Systems Requiring Seismic Restraint - ASTM E 580

4. IBC (International Building Code) standard for Seismic Zone for local area.

B. Suspend ceiling hangers from building's approved structural substrates and as follows:

1. Install hangers plumb and free from contact with insulation or other objects within ceiling plenum that are not part of supporting structure or of ceiling suspension system.

2. Splay hangers only where required to miss obstructions; offset resulting horizontal forces by bracing, counter-splaying, or other equally effective means.

3. Where width of ducts and other construction within ceiling plenum produce hanger spacings that interfere with location of hangers at spacing required to support standard suspension system members, install supplemental suspension members and hangers in form of trapezes or equivalent devices. Size supplemental suspension members and hangers to support ceiling loads within performance limits established by referenced standards and publications.

4. Where used secure wire hangers to ceiling suspension members and to supports above with a minimum of three tight turns. Connect hangers directly either to structures or to inserts, eye screws, or other devices that are secure; that are appropriate for substrate; and that will not deteriorate or otherwise fail due to age, corrosion, or elevated temperatures.

5. Space hangers not more than 48 inches on center, along each member supported directly from hangers, unless otherwise indicated; and provide hangers not more than 8 inches from ends of each member. Supply supporting calculations from licensed Structural Engineer verifying hanger spacing meets all requirements, when spacing exceed those recommended.

6. Fine level grid to 1/8 inch in 10 feet from specified elevation(s), square and true.

7. Adjust suspension system runners so they are square (within .5 degree from 90 degrees) and securely interlocked with one another. Remove and replace dented, bent, or kinked members.

C. Attach the custom radiused ceiling system carriers to the rigid ceiling sub-framing at platform canopy. Fasten carriers per manufacturers printed instructions. Carriers to be installed at 24 inches on center. Rigid ceiling sub-framing to provide seismic and wind load resistance for linear metal ceiling system.

D. Secure bracing wires to ceiling suspension members and to supports acceptable to Architect / Engineer and or inspector. Suspend bracing from building's structural members and / or structural deck, as required for hangers, without attaching to permanent metal forms, steel deck, or steel deck tabs(unless directed otherwise).

E. Install edge moldings and trim of type indicated at perimeter of acoustical ceiling area and where necessary to conceal edges of acoustical metal pan. Method of edge trim attachment and design of edge trims to be approved by Architect.

1. Screw attach moldings to substrate at intervals not more than 18” O.C. and not more than 6” from ends, leveling with ceding suspension system to a tolerance of 1/8” in 10’. Miter corners accurately and connect securely.

2. Do not use exposed fasteners, including pop rivets, on moldings and trim without prior written approval. Or unless detailed otherwise.

F. Scribe and cut acoustical metal panel units for accurate fit at penetrations by, other work through ceilings. Stiffen edges of cut units as required to eliminate evidence of buckling or variations in flatness exceeding referenced standards for stretcher-leveled metal sheet.

G. Install acoustical metal panel units in coordination with suspension system.

1. Align joints in adjacent courses to form uniform, straight joints parallel to room axis in both directions, unless otherwise indicated. Install directionally patterned or textured panels in directions indicated on approved shop drawings. Panel-joints shall flow smoothly and in a straight line within 1/8” in 10’. Intersections shall be continuous.

2. Fit adjoining units to form flush, tight joints. Scribe and cut units for accurate fit at borders and around construction penetrating ceiling.

3. Remove protective film from panels only when space is completely clean and free of airborne particles. Use white cotton gloves for final installation of panels into grid system.

3.4 ADJUST AND CLEAN

A. Adjust components to provide uniform tolerances.

B. Replace all ceiling panels that are scratched, dented or otherwise damaged.

C. Clean exposed surfaces with non-solvent, non-abrasive commercial type cleaner.

END OF SECTION

34-003 – 01/27/2014

SECTION 09680

CARPET

PART 1 - GENERAL

1.1 SUMMARY:

1.1.1 Section Includes: Carpet and accessories.

1.1.2 Related Documents: The Conditions of the Contract and Division 1 apply to this section as fully as if repeated herein.

1.2 REFERENCES:

The editions of the specifications and standards referenced herein, published by the following organizations, apply to the work only to the extent specified by the reference. Refer to Section 01422 for information concerning availability and use of references.

American Association of Textile Chemists and Colorists (AATCC)
American Society for Testing and Materials (ASTM)

1.3 SUBMITTALS:

1.3.1 Shop Drawings: Submit shop drawings showing layout and seaming diagrams. Indicate pile or pattern direction and locations and types of moldings and edge strips.

1.3.2 Product Data: Submit for each type of carpet material and installation accessory required. Submit written data on physical characteristics, durability, resistance to fading, and flame resistance characteristics.

1.3.3 Samples:

.1 Carpet: Submit minimum 12 by 18 inch samples of each type of carpet showing full range of color, texture, and pattern variations expected. Prepare samples from same materials to be used for the project.

.2 Accessories: Submit 12 inch long samples of each type of exposed edge stripping and accessory item.

1.3.4 Certificates of Compliance: Submit certified test report or other evidence that carpets meet the tuft bind, static control and flammability properties specified herein.

1.3.5 Maintenance Manual: Submit manual of carpet manufacturer's complete recommendations for the care, cleaning and maintenance of carpet.

1.3.6 Submittal procedures and quantities are specified in Division 1.

1.4 DELIVERY, STORAGE, AND HANDLING:

Deliver carpet materials in original mill protective wrapping with mill register numbers and tags attached. Store inside, in well ventilated area, protected from weather, moisture and soiling. Store rolls flat, not standing on end. Maintain minimum temperature of 68 degrees F at least 3 days before and during installation in area where materials are stored.

1.5 WARRANTY:

In addition to the guarantee requirements of the General Conditions, warrant carpet for a period of 5 years after "Notice of Completion" against edge raveling, delamination and wear exceeding 10 percent of face yarn weight.

PART 2 - PRODUCTS

2.1 CARPETS:

2.1.1 Manufacturers: Acceptable manufacturers or equal:

.1 Tufted Carpet Construction:

Patcraft.

.2 Carlo Ultraloc pattern; Dolce Collection # Z6510, Broadloom, pattern loop. Color – Limone #00103.

.3 Static Control: Incorporate a permanent static control system to limit static build-up to less than 3 kv when tested in accordance with AATCC 134 at 20 percent relative humidity and 70 degrees F.

.4 Flame Spread: Critical radiant flux of not less than 0.45 watts/cm^2 when tested in accordance with ASTM E 648.

2.2 CARPET ACCESSORIES:

2.2.1 Carpet Edge Guard: Extruded or molded heavy duty vinyl or rubber; minimum 2 inch wide anchorage flange; color as selected by the Architect from manufacturer's standard colors.

2.2.2 Seaming Cement: Hot-melt adhesive tape or similar product recommended by carpet manufacturer for taping seams and butting cut edges at backing to form secure seams and to prevent pile loss at seams.

2.2.3 Carpet Adhesive: Water-resistant, and non-staining, and nonflammable type as furnished or recommended by the carpet manufacturer to be compatible with adhesives used in backing.

PART 3 - EXECUTION

3.1 EXAMINATION:

3.1.1 Substrate: Inspect subfloor surfaces before start of work. Do not start work until deficiencies or other conditions that would adversely affect performance, installation or quality of the carpet installation have been corrected. Start of work of this section constitutes acceptance of floor surfaces.

3.1.2 Materials: Unroll all goods to verify uniformity, quality, color and texture against the approved samples before installation. Bring discrepancies to the attention of the Architect. The delivered goods shall match the approved sample unless a written order has been issued by the Architect.

3.1.3 Dimensions: Before start of carpet installation, check critical dimensions of spaces to be carpeted.

3.2 PREPARATION:

3.2.1 Do not install carpet over concrete with excessive moisture or dust producing surface which is not adequately sealed.

3.2.2 Remove debris, cementitious deposits and similar obstructions on substrates to receive carpet. Fill cracks and voids but do not obstruct expansion joints.

3.2.3 Immediately before installation of carpet, clean surfaces to be carpeted by vacuum cleaning.

3.3 INSTALLATION:

3.3.1 General: Comply with carpet manufacturer's instructions and recommendations. Place seams as indicated on shop drawings. Locate seams at doorways at centerline of doors in closed position. Maintain direction of pattern and texture.

.1 Extend carpet under open-bottomed and raised bottom obstructions and under removable flanges of obstructions. Extend carpet into closets and alcoves of rooms indicated to be carpeted, unless otherwise scheduled.

.2 Provide cutouts for removable access devices in substrate, bind edges neatly.

.3 Carpeting shall be tight, smooth, and perfect at completion of installation. The carpet manufacturer's representative shall inspect and approve all carpet installation and workmanship during the course of the work.

3.3.2 Direct Glue Down Installation:

.1 Install carpet in accordance with the manufacturer's recommendations for the use of hot melt tape seaming technique and for proper amount of stretch in width and length. No patching or small pieces will be permitted. Cut carpet and fit tightly to wall, obstructions, corners, pipes and fittings.

.2 Apply primer to entire substrate where necessary for adequate bond of carpet.

.3 Fit sections of carpet into each room or space before application of adhesive. Trim off mill edges unless carpet has been pre-trimmed. Maintain straight seams.

.4 Apply seaming cement on cut edges of carpet at seams, securing base of pile at cut.

.5 Apply adhesive uniformly to substrate in accordance with manufacturer's instructions. Butt carpet edges tightly together to form seams without gaps. Roll lightly to eliminate air pockets and ensure uniform total area bond of carpet to substrate.

3.4 CLEANING AND PROTECTION:

3.4.1 Cleaning: After installation, remove all debris, moldings, scraps, and other foreign matter. Remove soiled spots or adhesive from the face of the carpet with the appropriate spot remover. Clip protruding face yarn with sharp scissors. Vacuum the carpet clean.

3.4.2 Protection: Carefully protect installed carpet from soiling and damage with heavy, reinforced, non-staining kraft building paper or polyethylene film of an approved quality and thickness. Lap and secure edges of covering widths. Keep covering in repair and replace damaged portions.

3.4.3 Carpet Remnants: Package and identify usable scrap and overage of 3 square yards or larger in size. Deliver to the Owner to be stored for future patching.

END OF SECTION

34-003 – 01/27/2014

SECTION 09900

PAINTS AND COATINGS

PART 1 - GENERAL

1.1 SUMMARY:

1.1.1 Section Includes: Furnishing of materials and equipment and completion of painting and painter's finish on exposed exterior surfaces as required to complete the painting and finishing as indicated and specified.

1.1.2 Related Documents: The Conditions of the Contract and Division 1 apply to this section as fully as if repeated herein.

1.1.3 Related Sections: High-Performance Coatings is specified in Section 09960.

1.2 SUBMITTALS:

1.2.1 Samples: Prepare samples of colors and textures based upon the Architect's selections and submit them for review.

.1 Painted Wall Samples: Prepare on 8" by 10" matt board in a stair step manner so all required coats show.

1.2.2 Submittal procedures and quantities are specified in Division 1

1.3 QUALITY ASSURANCE:

1.3.1 The intent and requirements of this section, is that materials, items and surfaces which are normally painted and finished in construction of this type and quality, shall be so included, whether or not said materials, items or surfaces are specifically called out and included in the schedules and notes on the drawings, or is, or is not, specifically mentioned in these specifications.

1.3.2 The following general categories of construction and items are included under other sections, and shall not be a part of this section:

.1 Shop prime painting of structural and miscellaneous iron or steel.

.2 Shop prime painting of hollow metal.

.3 Shop finished construction and items.

1.3.3 Paint exposed mechanical, plumbing and electrical construction, which is not factory finished.

1.3.4 The Room Finish Schedules indicated, show the location of surfaces to be painted or finished. The schedule indications are general and do not necessarily define

the detail requirements. Include detailed refinements and further instructions as may be given for the required complete finishing of spaces and rooms.

1.3.5 Regulatory Requirements. The quantity of volatile organic compounds (VOC) used in paint products shall not exceed the limits permitted under the current regulations for architectural coatings of the South Coast Air Quality Management District.

1.4 DELIVERY, STORAGE AND HANDLING:

1.4.1 Delivery:

.1 Deliver paint in manufacturer's labeled and sealed containers. Labels shall include manufacturer's name, brand, type, batch number, color of paint and instructions for reducing. Thin only in accordance with printed directions of manufacturer. Thinning shall comply with the regulations of the air pollution control district having jurisdiction.

.2 Do not deliver or use materials other than those specified, or approved.

1.4.2 Storage and Handling: Store paint materials and equipment, when not in actual use, in places specifically assigned for that purpose. Ventilate storage space and provide fire protection. Mix and handle paint in these assigned areas; use metal containers for mixing and handling and designed for safety. Remove paint materials, including rags, tarpaulins, mixers, empty containers and filled or partially filled containers from the building areas at the close of each working day.

1.5 PROJECT CONDITIONS:

1.5.1 Examine the drawings and the specifications of other trades and consult with the other trades to determine the full extent of surfaces and items which are specified to include shop priming and shop finish painting.

1.6 WARRANTY:

In addition to the warranty and correction of work requirements of the General Conditions, warrant painting and finishing against peeling, fading, cracking, blistering, or crazing for a period of 2 years from the date of "Notice of Completion". The written warranty shall include materials and labor. The warranty shall be signed by the paint manufacturer, the painter and the Contractor and shall be submitted in accordance with Division 1.

PART 2 - PRODUCTS

2.1 MATERIALS:

2.1.1 Substitutions: Materials will be considered for substitution subject to requirements specified in Division 1. Submit chemical formulations of materials proposed for substitution to demonstrate that formulation of substitution is similar to

formulation of specified product; or results of test showing that performance of substitution is equivalent to performance of specified product.

2.1.2 Acceptable Manufacturers: All paint colors are as manufactured by Dunn Edwards Corporation. Acceptable manufacturers include the following:

Dunn Edwards Corporation
ICI Paint
Sherwin-Williams Co.
Vista Paint

2.1.3 Primer and sealer coats may be thinned no more than 10 percent, with paint manufacturer's thinner. Use other materials as they come from the can, except as otherwise approved.

2.1.4 Secure the Color Schedule before undercoating. Unless otherwise specified, tint undercoats slightly to approximate the color of the finish coat. Obtain approval of colors before proceeding with the finishing operations.

2.1.5 Where a specific name is not given for a product or ingredient, provide item of the best quality of the approved manufacturer, which is normally used for the intended purpose.

2.2 COLOR SELECTION:

2.2.1 The Architect will select the finish colors and determine the basic hues of all surfaces to be painted or finished.

2.2.2 After the actual painting and finishing has started, the Architect retains the right to make minor modifications in tone and shade on the various surfaces to suit the actual lighting conditions encountered. Submit additional samples, as required, to assist the Architect in his final selection.

2.2.3 The number of colors to be used in any given room or space, and on the entire project, will be determined by the Architect.

2.3 PAINTING SCHEDULE:

2.3.1 Refer to Drawings.

2.3.2 Miscellaneous: Construction visible through screen vents and grilles shall have one heavy coat of flat black paint.

PART 3 - EXECUTION

3.1 EXAMINATION:

Examine surfaces to be painted before beginning painting operations. Construction of other trades that has been left or installed in a condition not suitable to receive paint, stain, other specified finish shall be repaired or corrected by the applicable trade before painting. Painting of defective or unsuitable surface implies acceptance of the surface.

3.2 PREPARATION:

3.2.1 Protection:

.1 Before painting remove hardware, accessories, plates, lighting fixtures and similar items or provide protection of such items. On completion of each space, replace above items. Use only skilled mechanics for removing and connecting above items. Protect adjacent surfaces as required or directed.

.2 Wherever painting and finishing is being performed, protect floors, surfaces and items from damage by the painting operations. Provide clean drop cloths wherever necessary. Orderly and carefully arrange and protect supplies, materials, paints, and containers.

3.2.2 Surface Preparation:

.1 General: Surfaces shall be clean and dry before painting and finishing. Remove dirt and dust by stiff bristle brush and wiping with cloths. Remove oil and grease by cleaning using a materials and methods recommended by the paint manufacturer. Thoroughly rinse surfaces with water which have been contaminated with chemicals. Apply the first coat of paint as soon as possible after cleaning and drying the surfaces.

.2 Shop Primed Ferrous Metal Surfaces: Wash free of grease, dirt, oil, and dust, using materials and methods recommended by the paint manufacturer. Repair shop primed surfaces and touch up wherever shop priming is damaged, and at all welds.

.3 Galvanized Metal Surfaces: Pretreat surfaces by cleaning with a vinyl wash coat or wash and etch with a phosphoric acid etching compound, as recommended by the paint manufacturer. If phosphoric acid etching is used, rinse with water and allow to dry. If vinyl wash coat is used, apply primer the same day as vinyl wash coat is applied.

.4 Concrete Surfaces: Thoroughly clean form oil and other deposits from form surfaces and remove laitance and powder. Do not start painting operations until surfaces are clean and sound and thoroughly cured and dried.

.5 Wood Surfaces: Sand smooth and clean before application of the first coat. Putty and spackle smooth, holes, splits and scratches after first coat application.

3.2.3 Preparation of Existing Surfaces:

.1 Metals: Remove all chalk, dirt and mildew thoroughly. If it is difficult to thoroughly remove all chalk, dirt and mildew by washing thoroughly and rinsing, apply one coat of exterior oil-based primer when the surface is completely dry. This will aid in

obtaining proper adhesion properties. Make certain to make the paint application as soon as possible after cleaning to prevent possible mildew spore growth from returning.

.2 Aluminum: Dull all glossy areas with sandpaper. Remove any loose dirt, paint or other material prior to painting, using a scraper or power brush if necessary. Wipe clean and dry thoroughly. Prime with a zinc chromate primer or acrylic primer prior to finish coating.

.3 Galvanized Steel: Wash all previously painted galvanized surfaces with a quality paint thinner to remove grease and deposits. If the galvanized surface is broken and rust is evident, remove the rust to bare metal by wire brushing, sanding or blasting. Clean thoroughly and spot prime the bare metal with acrylic primer.

.4 Fill holes and blemished wood surfaces with wood patching compound and spot prime.

3.3 APPLICATION:

3.3.1 Application: Apply paints by brush or roller except as otherwise specified. Use paint of proper consistency for each coat, well brushed out or flowed on to obtain a uniform finish free from holidays, brush marks, sags, crawls, or other defects.

3.3.2 Materials shall be applied in accordance with the approved manufacturer's directions and specifications. Accomplish thinning required in the manner and with the type of reducer recommended by manufacturer.

3.3.3 The proper number of coats of paints and other finishes specified, properly applied, will result in the desired effect. Should this effect not be attained, apply additional coats of the specified materials and methods.

3.3.4 Each coat of paint shall vary in shade from the proceeding coat in a manner that will make each coat readily distinguishable without affecting the finish color.

3.3.5 Sand enamel and varnish coats smooth before recoating. Repair defects and unevenness in previously applied coatings before applying the next coat.

3.3.6 Paint and finish surfaces indicated on Drawings and as specified herein. Where questions occur as to the indicated surfaces inform the Architect and receive clarification therefrom.

3.3.7 Millwork: Prime or back-paint (other than shop painted or prefinished surfaces) within 24 hours after delivery to Project site. Apply 2 coats paint (primer and filler or undercoat) on top and bottom edges of doors after being cut and fit but preferably before being hung. Prime or seal edges and cut surfaces of boarding or paneling.

3.3.8 Sheet Metal: Back-prime raw sheet metal before installation.

3.4 CLEANING, TOUCH-UP AND REFINISHING:

3.4.1 Touch-Up and Refinishing: Touch up, refinish, or repaint runs, sags, misses, holidays, stains and other defects in the painted surfaces, including inadequate coverage and mil thickness as necessary to produce a first-class workmanlike job.

3.4.2 Cleaning:

.1 Immediately remove accidental spatter and spillage and restore the damaged surfaces to perfect condition. Completely remove paint spots and spatter on glass, porcelain fixtures, other surfaces and clean the surfaces.

.2 At the completion of finishing operations in each space or room, remove materials, supplies, debris and rubbish from the areas and leave in a clean, orderly condition.

END OF SECTION

34-003 – 01/27/2014

PART 1 - **GENERAL**

1.1 RELATED DOCUMENTS

A. This Section includes shop and field surface preparation and shop and field painting of various steel substrates-interior and exterior exposed structural steel, miscellaneous support steel structures, Non-Passivated galvanized doors, door frames and Non-Passivated galvanized sheet metal flashing.

1. Surface preparation, including in the shop and applications of metal primer, and field applications of primers and finishes are specified in this Section.

B. Drawings and general provisions of the Contract, including General and Supplementary Conditions and Division 1 Specification Sections, apply to this Section.

1.2 SUMMARY

1. This Section includes surface preparation and application of high-performance coating systems on steel.

B. Related Sections include the following:

1. Division 5 Sections for shop priming of metal substrates with primers specified in this Section.
2. Division 9 Section "Painting" for general field painting.

1.3 REFERENCES

A. ASTM B 117—Standard Practice for Operating Salt Spray (Fog) Apparatus

B. ASTM D 3363—Standard Test Method for Film Hardness by Pencil Test

C. ASTM D 4060—Standard Test Method for Abrasion Resistance of Organic Coatings by the Taber Abraser

D. ASTM D 4141—Standard Practice for Conducting Black Box and Solar Concentrating Exposures of Coatings

E. ASTM D 4541—Standard Test Method for Pull-Off Strength of Coatings Using Portable Adhesion Testers

F. ASTM D 4585—Standard Practice for Testing Water Resistance of Coatings Using Controlled Condensation

G. ASTM D 4587—Standard Practice for Fluorescent UV-Condensation Exposures of Paint and Related Coatings

H. ASTM D 5590—Standard Test Method for Determining the Resistance of Paint Films and Related Coatings to Fungal Defacement by Accelerated Four-Week Agar Plate Assay

I. ASTM D 4213 –Standard test Method for Scrub Resistance of Paints by Abrasion Weight Loss

J. SSPC-SP-1 Solvent Cleaning

K. SSPC-SP-2 Hand Tool Cleaning

L. SSPC-SP-3 Power Tool Cleaning

M. SSPC-SP-11 Hand and Power Tool Clean to Bare Metal

N. SSPC-SP 6/NACE 3—Commercial Blast Cleaning.

O. ASTM D D6386---Surface Prepartion for Galvanized Surfaces

1.4 SUBMITTALS

A. Submit under provisions of Division 1.

B. Provide manufacturer's data sheets on each product to be used, including:

1. Preparation instructions and recommendations
2. Storage and handling requirements and recommendations
3. Installation methods
4. Operation and maintenance data
5. Provide material analysis, including vehicle type and percentage by weight and by volume of vehicle, resin and pigment.
6. Manufacturer’s certified test reports showing the substitute product(s) performance as outlined in Paragraph 2.3 shall be submitted.
7. Submit manufacturer’s Material Safety Data Sheets (MSDS) and other safety requirements.

C. Shop Drawings:

1. Submit a complete list of products proposed for use, including identifying product names and catalog numbers.

a. Arrange in same format as Schedule of Paint Finishes below.
b. Include applicable manufacturer’s data and recommendations.

D. Selection Samples: For finish products specified, one complete set of color chips representing manufacturer's full range of available colors.

E. Verification Samples: For each finish product specified, four samples, minimum size 3 X 4 inch square, and representing actual product color.

F. Manufacturer's Certificates: Certify products meet or exceed specified requirements.

1.5 QUALITY ASSURANCE

A. Regulatory Requirements: The quantity of volatile organic compounds (VOC) used in paint products shall not exceed the limits permitted under the current regulations for architectural coatings of the South Coast Air Quality Management District.

B. Manufacturer's Quality Assurance: Submit manufacturer's certification that coatings comply with specified requirements and are suitable for intended application.

C. Applicator's Quality Assurance: Submit list of a minimum of 5 completed projects of similar size and complexity to this Work. Include for each project:

1. Project name and location
2. Name of owner
3. Name of contractor
4. Name of architect
5. Name of coating manufacturer
6. Approximate area of coatings applied
7. Date of completion

D. Mock-Up: Provide a mock-up for evaluation of surface preparation techniques and application workmanship.

1. Prepare 10 foot by 10 foot (3.05 m by 3.05 m) mock-up for each coating system specified using same materials, tools, equipment, and procedures intended for actual surface preparation and application.
2. Do not proceed with remaining work until workmanship, color, and sheen are approved by Architect.
3. Refinish mock-up area as required to produce acceptable work.
4. Retain mock-ups to establish intended standards by which coating systems will be judged.

E. Pre-application Meeting: Convene a pre-application meeting before start of application of coating systems. Require attendance of parties directly affecting work of this section, including Contractor, Architect, applicator, and manufacturer's representative. Review the following:

1. Environmental requirements
2. Protection of surfaces not scheduled to be coated

3. Surface preparation
4. Application methods
5. Repair
6. Field quality control
7. Cleaning
8. Protection of coating systems
9. One-year inspection
10. Coordination with other work

1.6 DELIVERY, STORAGE, AND HANDLING

A. Delivery: Deliver materials to site in manufacturer's original, unopened containers and packaging, with labels clearly identifying:

1. Coating or material name
2. Manufacturer
3. Color name and number
4. Batch or lot number
5. Date of manufacture
6. Mixing and thinning instructions

B. Storage:

1. Store materials in a clean dry area and within temperature range in accordance with manufacturer's instructions.
2. Keep containers sealed until ready for use.
3. Do not use materials beyond manufacturer's shelf life limits.

C. Handling: Protect materials during handling and application to prevent damage or contamination.

D. Store and dispose of solvent-based materials, and materials used with solvent-based materials, in accordance with requirements of local authorities having jurisdiction.

1.7 PROJECT CONDITIONS

A. Maintain environmental conditions (temperature, humidity, and ventilation) within limits recommended by manufacturer for optimum results. Do not install products under environmental conditions outside manufacturer's absolute limits.

B. Weather:

1. Air and Surface Temperatures: Prepare surfaces and apply and cure coatings within air and surface temperature range in accordance with manufacturer's instructions.
2. Surface Temperature: Minimum of 5ºF (3 ºC) above dew point.

3. Relative Humidity: Prepare surfaces and apply and cure coatings within relative humidity range in accordance with manufacturer's instructions.
4. Precipitation: Do not prepare surfaces or apply coatings in rain, snow, fog, or mist.
5. Wind: Do not spray coatings if wind velocity is above manufacturer's recommended limit.

C. Ventilation: Provide ventilation during coating evaporation stage in confined or enclosed areas in accordance with manufacturer's instructions.

D. Dust and Contaminants:

1. Schedule coating work to avoid excessive dust and airborne contaminants.
2. Protect work areas from excessive dust and airborne contaminants during coating application and curing.

PART 2 - **PRODUCTS**

2.1 MANUFACTURERS

A. Products specified are manufactured by Tnemec Company Incorporated, 417 East Weber Avenue, Compton, CA 90222.Tel # 310-637-2363, local Contact: Dustin Kaatz (310-804-2325), http://www.tnemec.com/tpc , and are specified as a standard of quality.

2.2 HIGH PERFORMANCE COATINGS GENERAL

A. Materials Compatibility: Provide shop and field primers, and finish-coat materials that are compatible with one another and with the substrates indicated under conditions of service and application, as demonstrated by manufacturer based on testing and field experience.

2.3 COATING SYSTEMS FOR STEEL

A. System: Zinc-RichUrethane Primer/Epoxy/Fluoropolymer

1. Urethane *Shop* Primer, Zinc-Rich

a. Tnemec Series 90-97 Tneme-Zinc.

1) Generic Type: Aromatic Urethane, Zinc-Rich
2) Solids by Volume: 62%
3) Zinc Dust Content: 83% by weight in dried film
4) Volatile Organic Compounds, Unthinned: 2.68 lbs/gallon (321 grams/liter)

5) Curing Time at 75ºF (24ºC)

a) To Handle: 1 hour
b) To Recoat: 4 hours (For faster curing and low-temperature applications, add Series 44-710 Urethane Accelerator.)

2. *Field Touch-Up Primer* Urethane Primer, Zinc-Rich

a. Tnemec Series 94-H20 Hydro-Zinc

1) Generic Type: Aromatic Urethane, Zinc-Rich
2) Solids by Volume: 63%
3) Zinc Dust Content: 83% by weight in dried film
4) Volatile Organic Compounds, Unthinned: .8 lbs/gallon (96 grams/liter)
5) Curing Time at 75ºF (24ºC)

a) To Handle: 2 hour
b) To Recoat: 8 hours (For faster curing and low-temperature applications, add Series 44-710 Urethane Accelerator.)

3. Epoxy, Pigmented *Field Applied* Intermediate Coat

a. Tnemec Series L69 Hi-Build Epoxoline II.

1) Generic Type: Polyamidoamine Epoxy
2) Finish: Satin
3) Solids by Volume: 67%
4) Volatile Organic Compounds, Unthinned: 0.82 lbs/gallon (98 grams/liter)
5) Curing Time at 70ºF (21ºC)

a) To Handle: 7 hours
b) To Recoat: 10 hours (For faster curing and low-temperature applications, add Series 44-700 Epoxy Accelerator.)

4. Fluoropolymer, *Field Applied* Pigmented Topcoat

a. Tnemec Series V1070 Fluoronar

1) Generic Type: Advanced Thermoset Solution Fluoropolymer
2) Finish: Semi-Gloss
3) Solids by Volume:
4) Volatile Organic Compounds, Unthinned: 0.81 lbs/gallon (97 grams/liter)
5) Curing Time at 70ºF (21ºC)

a) To Handle: 30 minutes

b) To Recoat: 6–8 hours (For faster curing and low-temperature applications, add Series 44-710 Urethane Accelerator.)

2.4 PERFORMANCE CRITERIA

A. Fluoropolymer Performance Criteria

a. Abrasion
1) Method: ASTM D 4060, (CS-17 Wheel, 1,000 grams load)
2) System: One coat thermoset fluoropolymer cured 30 days at 75ºF (24ºC)
3) Requirement: No more than 103 mg loss after 1,000 cycles.

b. Exterior Exposure
1) Method: South Florida marine exposure
2) System: One coat polyamide epoxy and one coat thermoset fluoropolymer applied to SSPC-SP1 Solvent Cleaned aluminum and cured 30 days at 75°F (24°C).
3) Requirement: No blistering, cracking or delamination of film. No less than 82% gloss retention, no more than 15 units gloss loss and no more than 0.53 DE_{00} color change 36 months exposure, average of five colors.

c. Exterior Exposure
1) Method: ASTM D 4141, Method C (EMMAQUA)
2) System: One coat polyamide epoxy and one coat thermoset fluoropolymer (white) applied to SSPC-SP1 Solvent Cleaned aluminum and cured 30 days at 75°F (24°C).
3) Requirement: No blistering, cracking or chalking. No less than 84% gloss retention, no more than 13 units gloss loss and 0.41 DE_{Hunter} color change after 3,500 M/J m^2 EMMAQUA exposure.

d. Graffiti Resistance
1) Method: Following graffiti material applied to coating and allowed to dry for seven days.
2) System: One coat polyamide epoxy and one coat thermoset fluoropolymer applied to SSPC-SP7 Brush-Off Blast Cleaned steel and cured 30 days at 75°F (24°C).
3)

Reagent:	Xylene	MEK
Acrylic Spray Paint	Removal	Removal
Epoxy Spray Paint	Removal	Removal
Markette Marker	Removal	Removal
Ball Point Ink	Removal	Removal
Crayon	Removal	Removal
Lipstick	Removal	Removal

4) Note: Some slight loss of gloss and/or softening may occur depending on the amount of effort required for removal of the graffiti and length of exposure of the underlying coating to the cleaning solvent.

e. Hardness
1) Method: ASTM D3363
2) System: One coat polyamide epoxy and one coat thermoset fluoropolymer applied to SSPC-SP7 Brush-Off Blast Cleaned steel and cured 30 days at 75°F (24°C).
3) Requirement: No gouging with an 8H or less pencil.

f. Humidity
1) Method: ASTM D 4585
2) System: One coat polyamide epoxy and one coat thermoset fluoropolymer applied to SSPC-SP10 Near-White Metal Blast Cleaned steel and cured 7 days at 75ºF (24ºC).
3) Requirement: No blistering, cracking, rusting or delamination of film after 3,000 hours exposure.

g. QUV
1) Method: ASTM D 4587 (UVA-340 Bulbs, Cycle 4:8 hours UV/4 hours condensation)
2) System: One coat thermoset fluoropolymer (white) applied to SSPC-SP1 Solvent Cleaned aluminum and cured 30 days at 75ºF (24ºC).
3) Requirement: No blistering, cracking, or chalking. No less than 61% gloss retention (31.4 units gloss change) and 1.89 DE_{FMC2} color change after 25,000 hours exposure.

h. Salt Spray (Fog)
1) Method: ASTM B 117
2) System: One coat aromatic urethane zinc-rich, one coat polyamide epoxy and one coat thermoset solution fluoropolymer applied to SSPC-SP10/NACE 2 Near-White Metal Blast Cleaned steel and cured 7 days at 75ºF (24ºC).
3) Requirement: No blistering, cracking, rusting or delamination of film. No more than 1/32 inch rust creepage at scribe after 10,000 hours exposure.

2.4 SURFACE PREPARATION

A. Bare Steel Shop Surface Preparation:

1. Clean surfaces as follows immediately prior to priming.

a. SSPC-SP6 Commercial Blast Cleaning Surfaces to be coated shall be clean, dry, smooth and free from dust and foreign matter which will adversely affect adhesion or appearance. Provide a minimum surface profile of 1.5 mils angular anchor pattern.

b. Prior to application of primer, steel surfaces shall be prepared as stated above to receive coating system or in compliance with manufacturer's recommendations and specifications of Steel Structures Painting Council.

B. Spot repair of bare areas, welds, damaged zinc rich primer or galvanized steel surfaces

1. Spot prepare areas in accordancewith SSPC-SP-11 Power Tool Clean to Bare Metal.

2.5 ACCESSORIES

A. Coating Application Accessories:

1. Accessories required for application of specified coatings: Provide in accordance with coating manufacturer's instructions, including thinners.

PART 3 - **EXECUTION**

3.1 EXAMINATION

A. Do not begin installation until substrates have been properly prepared.

B. If substrate preparation is the responsibility of another installer, notify Architect of unsatisfactory preparation before proceeding.

3.2 PROTECTION OF SURFACES NOT SCHEDULED TO BE COATED

A. Protect surrounding areas and surfaces not scheduled to be coated from damage during surface preparation and application of coatings.

B. Immediately remove coatings that fall on surrounding areas and surfaces not scheduled to be coated.

3.3 SURFACE PREPARATION OF STEEL

A. Prepare steel surfaces in accordance with manufacturer's instructions.

B. Fabrication Defects:

1. Correct steel and fabrication defects revealed by surface preparation.
2. Remove weld spatter and slag.
3. Round sharp edges and corners of welds to a smooth contour.
4. Smooth weld undercuts and recesses.
5. Grind down porous welds to pinhole-free metal.
6. Remove weld flux from surface.

C. Ensure surfaces are dry.

D. Remove visible oil, grease, dirt, dust, mill scale, rust, paint, oxides, corrosion products, and other foreign matter in accordance with SSPC-SP 6/NACE 3, unless otherwise specified.

E. Abrasive Blast-Cleaned Surfaces: Coat abrasive blast-cleaned surfaces with primer before visible rust forms on surface. Do not leave blast-cleaned surfaces uncoated for more than 8 hours.

F. Shop Primer: Prepare shop primer to receive field coat in accordance with manufacturer's instructions.

3.4 APPLICATION

A. Apply coatings in accordance with manufacturer's instructions.

B. Mix and thin coatings, including multi-component materials, in accordance with manufacturer's instructions.

C. Keep containers closed when not in use to avoid contamination.

D. Uniformly apply coatings at spreading rate required to achieve specified DFT.

E. Apply coatings to be free of film characteristics or defects that would adversely affect performance or appearance of coating systems.

F. Stripe paint with brush critical locations on steel such as welds, corners, and edges using specified primer.

3.5 FIELD QUALITY CONTROL

A. Inspector's Services:

1. Verify coatings and other materials are as specified.
2. Verify surface preparation and application are as specified.
3. Verify DFT of each coat and total DFT of each coating system specified using wet film and dry film gauges.

4. Coating Defects: Check coatings for film characteristics or defects that would adversely affect performance or appearance of coating systems.
5. Report:

    a. Submit written reports describing inspections made and actions taken to correct nonconforming work.
    b. Report nonconforming work not corrected.
    c. Submit copies of report to Architect and Contractor.

B. Manufacturer's Technical Services: Coordinate with coating manufacturer's technical service department or independent sales representative for current technical data and instructions.

3.6 CLEANING

A. Remove temporary coverings and protection of surrounding areas and surfaces.

B. Remove overspray and splatter, if any.

3.7 PROTECTION OF COATING SYSTEMS

A. Protect surfaces of coating systems from damage during construction.

B. Touch-up, or repair damaged products before Substantial Completion.

3.8 ONE-YEAR INSPECTION

A. Owner will set date for one-year inspection of coating systems.

B. Inspection shall be attended by Owner, Contractor, Architect, and manufacturer's representative.

C. Repair deficiencies in coating systems as determined by Architect in accordance with manufacturer’s instructions.

3.9 SCHEDULES

A. Exterior and Interior Exposed Steel, Semi-Gloss Fluoropolymer Finish

1. Surface Preparation (Shop): SSPC-SP6/NACE 3 Commercial Blast Cleaning.
2. Shop Primer: Tnemec Series 90-97 Tneme-Zinc at 2.5 to 3.5 mils DFT.
3. Touch-up Surface preparation (Field): Tnemec Series 94-H2O Hydro-Zinc at 2.5 to 3.5 mils DFT.

4. Intermediate Coat (Field): Tnemec Series L69 Hi-Build Epoxoline II at 2.0 to 4.0 mils DFT.
5. Finish Coat (Field): Tnemec Series 1070V Fluoronar at 2.0 to 3.0 mils DFT.
6. Total Dry Film Thickness: 6.5 to 10.5 mils

NOTE: All shop and field touch up of the zinc rich primer or galvanized steel shall be prepared in accordance with SSPC-SP-11 Power Tool clean to bare Metal; followed by one coat of the Series 94 H2O Hydro-Zinc at 2.5-3.5 mils DFT. The coating systems designated in Section 3.9 Schedules to be completed as specified.

END OF SECTION

02/25/2014

SECTION 09965

GRAFFITI-RESISTANT COATINGS

PART 1 - GENERAL

1.1 SUMMARY:

1.1.1 Section Includes: Sacrificial anti-graffiti wall coating.

1.1.2 Related Documents: The Conditions of the Contract and Division 1 apply to this section as fully as if repeated herein.

1.1.3 Related Sections: Painting is specified in Section 09900.

1.2 SUBMITTALS:

1.2.1 Product Data: Submit the manufacturer's current literature showing compliance with these specifications. Manufacturer shall certify that materials meet specifications and that the applicator is a franchised applicator for the material specified.

1.2.2 Maintenance Instructions: Furnish printed instructions on care and maintenance procedure recommended for anti-graffiti coating.

1.2.3 Mock-Up: Prepare an approved test surface with anti-graffiti coating to represent the standard of workmanship. Coat the surface as specified herein and in accordance with the manufacturer's specifications. Allow the coating to cure, apply graffiti as directed by the Architect, and then remove the graffiti coating along with the graffiti. The cleaned surface shall remain undamaged and shall display no graffiti "shadows" or "ghosts". Do not reapply the anti-graffiti coating to surfaces before the sample surface has been approved by the Architect.

1.3 QUALITY ASSURANCE

1.3.1 Applicator's Qualifications: Applicator shall be licensed or approved by manufacturer of the coating materials.

1.3.2 Manufacturer's Qualifications: The anti-graffiti coating shall be manufactured and furnished by a single company who specializes in this particular field of coating and who has been so engaged, successfully, for a period of at least 2 years.

1.3.3 Regulatory Requirements. The quantity of volatile organic compounds (VOC) used in anti-graffiti coatings shall not exceed the limits permitted under the current regulations for architectural coatings of the South Coast Air Quality Management District.

1.4 DELIVERY, STORAGE AND HANDLING

1.4.1 Deliver to the site in original sealed containers bearing manufacturer's label, batch number and date of manufacture.

1.4.2 Store at the site in a location protected from the weather, and away from excessive heat and flames.

1.5 PROJECT CONDITIONS

1.5.1 Do not apply coating materials when ambient or surface temperature is below 40 degrees F, during rainy conditions, or within 3 days after surfaces have become wet from rainfall or other moisture.

1.5.2 Protect shrubbery and other plant life, asphaltic based materials, or any other materials which may be damaged from contact with the anti-graffiti coating materials.

1.5.3 Observe recommended safety precautions as directed by governing agencies and the manufacturer.

PART 2 - PRODUCTS

2.1 MATERIALS

2.1.1 Anti-Graffiti Coating: Non-toxic, biodegradable, wax based, sacrificial coating. Acceptable product or equal:

Monopole, Inc.; Monochem Permashield Premium

PART 3 - EXECUTION

3.1 EXAMINATION

Examine surfaces to be treated with anti-graffiti system. Correct all conditions which could impair results of application of system. Make sure that all jointing, tooling and masonry cleaning operations specified in Section 04821 have been completed. Commencement of work constitutes acceptance by applicator and manufacturer of surfaces for proper application of system.

3.2 PREPARATION

3.2.1 Surfaces shall be properly cured and dried before the application of the coating. Allow masonry to cure at least 10 days under normal weather conditions before application of coatings. Moisture content shall not exceed 16 percent.

3.2.2 Surfaces to be coated shall be clean, free of loose particles and laitance, efflorescence, scale or other foreign matter.

3.2.3 Hosing: Use water at a minimum pressure of 2000 psi.

3.2.4 Steam Cleaning: Use high, medium or low pressure depending upon the condition of the surface.

3.2.5 Sand or Water Blasting: As required for a clean surface, remove sand with a water rinse.

3.2.6 Cleaning Solution: Scrub with a low residue, easily rinsed solution to remove all grease and wax build-up.

3.2.7 Allow the surface to dry thoroughly for a minimum of 24 to 48 hours after rinsing.

3.3 APPLICATION

Apply materials with low pressure airless spray equipment using air pressures and nozzle sizes recommended by the manufacturer. Apply the number of coats at the application rates recommended by the manufacturer depending upon type of substrate. Smooth out runs and drips with a poly-foam brush.

END OF SECTION

34-003 – 02/21/2014

SECTION 10170

PLASTIC TOILET COMPARTMENTS

PART 1 - GENERAL

1.1 SUMMARY:

1.1.1 Section Includes: Floor supported solid plastic phenolic core toilet compartments and floor supported urinal screens.

1.1.2 Related Documents: The Conditions of the Contract and Division 1 apply to this section as fully as if repeated herein.

1.2 SUBMITTALS:

1.2.1 Shop Drawings: Submit shop drawings indicating elevations of partitions, thickness of plastic, fastenings, proposed method of anchoring, size and spacing of anchors, details of construction, hardware, fittings, mountings and other related items and installation details. Show locations of reinforcement and cutouts for compartment-mounted toilet accessories.

1.2.2 Product Data: Submit manufacturer's technical data for materials, fabrication, finishes, fastenings, hardware, and installation details.

1.2.3 Samples: Submit full range of color and pattern samples. After color and pattern selection has been made, submit samples of each color and pattern for verification.

1.2.4 Submittal procedures and quantities are specified in Division 1.

1.3 QUALITY ASSURANCE:

1.3.1 Field Measurements: Secure field measurements before preparation of shop drawings and fabrication where possible, for proper and adequate fabrication and installation of the work.

1.3.2 Coordination: Furnish inserts and anchorages which must be built into other construction for installation of toilet compartments and urinal screens.

1.3.3 Regulatory Requirements: Provide toilet compartments meeting the requirements for the physically disabled of the California Code of Regulations (CCR) Title 24 Part 2, and ADA Accessibility Guidelines for Buildings and Facilities, dated June 26, 1991 as amended April 5, 1993 and January 18, 1994, and July 2004.

.1 Toilet stalls for disabled persons shall have slide bolt door latch, U-shape or wire pulls both sides of the door and self-closing hinges. Door hardware shall be mounted at 30" to 44" above finished floor. Doors at front entry stalls shall have 32" minimum clear width when the door is open 90 degrees. Doors at side entry stalls shall have 34" minimum clear width when the door is open 90 degrees.

1.4 DELIVERY, STORAGE, AND HANDLING:

Deliver and store materials in the manufacturer's original protective packaging except that should packaging become wet, remove it immediately to avoid wet storage stains. Store materials in an enclosed shelter providing protection from damage and exposure to the elements.

PART 2 - PRODUCTS

2.1 GENERAL DESCRIPTION:

2.1.1 Toilet Compartments: Floor supported type units having flush pilasters, panels and doors with solid phenolic core and high pressure matte finish melamine faces, and including fittings, hardware, and fastenings necessary for a complete installation. Acceptable products or equal:

Bobrick Washroom Equipment, Inc.; 1181 DuraLine Series
Bradley Corp.; 500 Series

2.1.2 Urinal Screens: Floor supported type units having flush panels with solid phenolic core and high pressure matte finish melamine faces, and including all fittings and fastenings necessary for a complete installation. Acceptable products or equal:

Bobrick Washroom Equipment, Inc.; 1181 DuraLine Series
Bradley Corp.; Model 3

2.2 MATERIALS:

2.2.1 Melamine Faces: NEMA Standard LD3, 0.050 inch thick, with a satin finish. Colors and pattern: Color No. 006F – Graphite Grafix, as manufactured by Bradley Corp.

2.2.2 Core Material for Pilasters, Panels, Doors and Urinal Screens: Solid phenolic core with face laminate fused in fabrication to substrate with no glue line or seam visible, black edges, minimum 3/4 inch thick for doors and pilasters, minimum 1/2 inch thick for divider panels.

2.2.3 Hardware and Accessories: Stainless steel or chrome plated brass or bronze. Aluminum or die cast zinc alloy castings will not be acceptable.

2.2.4 Pilaster Shoes: ASTM A 666, Type 302 or 304 stainless steel not less than 3 inches high, 20 gage, with a polished finish to match hardware.

2.2.5 Stirrup Brackets: Stainless steel or chrome plated brass or bronze. Aluminum or die cast zinc alloy castings will not be acceptable.

2.2.6 Exposed Anchorages and Fasteners: Stainless steel or chrome plated brass with theft resistant type heads and nuts.

2.2.8 Concealed Fasteners: Zinc or cadmium coated steel.

2.3 FABRICATION:

2.3.1 Panels and Doors: Flush, formed of solid phenolic core with melamine laminate faces fused to core.

.1 Door Dimensions: Unless otherwise indicated, furnish 24 inch wide in-swinging doors for standard toilet compartments and 36 inch wide out-swinging doors for compartments equipped for use by physically disabled.

2.3.2 Pilasters: Flush, formed of solid phenolic core with melamine laminate faces fused to core.

.2 Anchorage Devices: Provide galvanized steel anchorage devices, complete with threaded rods, lock washers, and leveling adjustment nuts welded to steel reinforcement, to permit structural connection at floor. Furnish 3 inch high pilaster shoes held in place by concealed clips.

2.3.3 Floor Supported Urinal Screens: Same construction as doors and panels.

.1 Pilasters: Flush, formed of solid phenolic core with melamine faces fused to core.

.2 Anchorage Devices: Provide galvanized steel anchorage devices, complete with threaded rods, lock washers, and leveling adjustment nuts, to permit structural connection at floor. Furnish 3 inch high pilaster shoes held in place by concealed clips.

2.4 HARDWARE:

2.4.1 Hinges: Manufacturer's standard self-closing type that can be adjusted to hold door open at any angle up to 90 degrees. Provide gravity type, spring-action cam type, or concealed torsion rod type

2.4.2 Latch and Keeper for In-Swinging Doors: Recessed latch unit, designed for emergency access, with combination rubber-faced door strike and keeper.

2.4.3 Slide-Bolt Latch for Out-Swinging Doors: Surface mounted latch unit designed for physically disabled accessibility, with combination rubber-faced door strike and keeper.

2.4.4 Coat Hook: Combination hook and rubber-tipped bumper, sized to prevent door from hitting mounted accessories.

2.4.5 Door Bumper: Manufacturer's standard rubber-tipped bumpers at out-swinging doors.

2.4.6 Door Pull: Manufacturer's standard for out-swinging doors.

PART 3 - EXECUTION

3.1 EXAMINATION:

Before covering wall framing with finish materials, examine framing to ensure that backing plates have been installed behind wall mounting brackets in such position as to receive all attachment screws.

3.2 INSTALLATION:

3.2.1 General: Install toilet compartments and urinal screens as shown on the shop drawings and in accordance with the manufacturer's specifications and printed installation instructions. Install toilet compartments and doors in a rigid and substantial manner, straight and plumb, with horizontal lines level.

3.2.2 Pilasters: Set pilasters units with anchorages having not less than 2 inch penetration into the structural concrete floor. Extend pilaster anchors through finish floor materials and fills and secure to structure with adjustable anchors and shoes. Level, plumb and tighten with leveling nuts and lock washers.

3.2.3 Panels and Urinal Screens: Provide clearances of not more than 1/2 inch between pilasters and panels and 1 inch between panels and walls.

.1 Secure panels and urinal screens to walls with 2 stirrup brackets located near the top and bottom of each panel.

.2 At light gage steel framed walls fasten brackets with toggle or molly bolts into metal studs or backing plates fastened directly to the studs. At wood framed walls fasten brackets with wood screws into wood studs or blocking fastened directly to the studs. At concrete or masonry walls fasten brackets with screws and expansion anchors.

3.3 ADJUSTING AND CLEANING:

3.3.1 Hardware Adjustment: After installation, carefully adjust hardware for proper operation. Set hinges on in-swinging doors to hold open approximately 30 degrees from the closed position when unlatched. Set hinges on out swinging doors to return to the fully closed position. Adjust doors so that bottoms of doors are level with the bottoms of the pilasters when the doors are in the closed position.

3.3.2 Cleaning: Clean compartments and doors upon completion of work and leave free from imperfections.

END OF SECTION

34-003 – 01/27/2014

SECTION 10210

WALL LOUVERS

PART 1 - GENERAL

1.1 SUMMARY:

1.1.1 Section Includes: This section covers furnishing and installing of fixed metal wall louvers and related work as indicated and specified.

1.1.2 Related Documents: The Conditions of the Contract and Division 1 apply to this section as fully as if repeated herein.

1.2 REFERENCES:

The editions of specifications and standards referenced herein, published by the following organizations, apply to the work only to the extent specified by the reference thereto. Refer to Section 01422 for information concerning availability and use of references.

American Society for Testing and Materials (ASTM)
Air Movement and Control Association (AMCA)

1.3 SUBMITTALS:

1.3.1 Shop Drawings: Submit fully detailed shop drawings giving sizes, details of fabrication and construction, methods of assembly and locations of hardware, anchors and all accessories. Make all field measurements necessary for fabrication and correct fitting of metal louvers shown on drawings.

1.3.2 Submittal procedures and quantities are specified in Division 1.

1.4 DELIVERY, STORAGE AND HANDLING:

Store louvers in dry locations with adequate ventilation, free from dust or water. Stack louvers off the floor. Do not cover with tarpaulins, polyethylene film or other similar coverings.

PART 2 - PRODUCTS

2.1 MATERIALS:

2.1.1 Galvanized Steel Sheet: ASTM A 653, lock-forming quality, coating designation G90.

2.1.2 Zinc Coated Steel Bird Screen Fabric: RR-W-360, Type I, 1/4 inch square mesh, of 16 gage zinc coated steel wire.

2.1.3 Fiber Glass Insect Screen Fabric: Fed. Spec. L-S-125, Type II, Class 2, 16 by 18 mesh.

2.2 METAL WALL LOUVERS:

2.2.1 Design louvers to withstand a wind load of not less than 20 pounds per square foot.

2.2.2 Standard Blade Louvers: Provide louvers blades of manufacturer's standard profile, slope and spacing required to meet the air and water performance requirements specified. Form louvers of galvanized steel not thinner than 16 gage. Louvers shall be factory assembled completely by welding into sections not to exceed 6 feet in width. For louvers of widths greater than 6 feet, provide mullions of same material and finish as louvers. Louvers shall bear the AMCA certified ratings program seal for air performance (pressure drop and water penetration), in accordance with AMCA 500 and AMCA 511. Pressure drop shall not exceed 0.15 inches of water and water penetration shall not exceed 0.25 ounces per square foot at an air velocity of 800 FPM.

2.3 SCREENS AND FRAMES:

2.3.1 Bird Screens: Provide zinc coated steel bird screen fabric in a zinc coated steel removable, rewireable frame finished to match the louver.

2.3.2 Insect Screens: Provide fiber glass insect screen fabric in a zinc coated steel removable, rewireable frame finished to match the louver.

2.4 ACCESSORIES:

Provide stainless steel screws and fasteners for aluminum louvers and zinc coated steel or stainless steel screws and fasteners for steel louvers. Provide other accessories such as extra sill pieces, special flange or angle appurtenances as required for complete and proper installation.

2.5 FINISH:

2.5.1 Galvanized Louvers: After fabrication, provide galvanize treatment consisting of chemical cleaning meeting the requirements of SSPC-SP1 and pickling treatment meeting the requirements of SSPC-SP 8, followed by a hot-dip galvanizing meeting the requirements of ASTM A 123.

.1 After galvanizing provide a 1.0 mil dry film thickness shop-applied primer consisting of coating manufacturer's standard epoxy primer and oven baked at 325 degrees F for 35 minutes.

.2 Fluorocarbon Finish: Coating which contains not less than 70% Kynar 500 as manufactured by Atochem North America, Inc. or Hylar 5000 as manufactured by Ausimont USA, Inc., polyvinylidene fluoride (PVDF) resin meeting the requirements of AAMA 605.2-90. Acceptable products or equal, no known equal:

Akzo; Trinar
Glidden Coatings and Resins; Nubelar
Morton International; Fluoroceram
PPG Industries; Duranar
Valspar; Fluropon

.3 Application: Finish the primed surface using the coil coating process to achieve a dry film thickness of not less than 0.8 mils and oven bake at a temperature of not less than 475 degrees F in accordance with the coating formulators written procedures.

.4 Touch-Up Paint: Provide touch-up paint as recommended by the coating formulator for field application.

.5 Colors: As selected by the Architect from manufacturer's standards.

2.5.2 Finish exposed fasteners to match the color finish of the adjacent material.

PART 3 - EXECUTION

3.1 INSTALLATION:

Metal louvers shall be installed straight and plumb as indicated and in accordance with the manufacturer's recommendations. Seal around interior and exterior of frame using sealant as specified in Section 07900.

3.2 CLEANING AND REPAIR:

Restore finishes damaged during installation so that there is no evidence of corrective work. Return items which cannot be refinished in the field and refinish the entire unit or provide new units.

END OF SECTION

34-003 – 01/09/2014

SECTION 10350

FLAGPOLES

PART 1 - GENERAL

1.1 SUMMARY:

1.1.1 Section Includes: Flagpoles complete with flags, concrete foundations and anchors, fastenings and accessories.

1.1.2 Related Documents: The Conditions of the Contract and Division 1 apply to this section as fully as if repeated herein.

1.2 DESIGN REQUIREMENTS:

Design flagpole and foundation tube to withstand a 90 MPH wind velocity, while flying a 5 foot by 8 foot flag.

1.3 SUBMITTALS:

1.3.1 Shop Drawings: Submit fully detailed shop drawings of the flagpoles, including installation details, jointing, grounding method. Include pole foundations and complete structural calculations and design analyses of the pole and foundation.

1.3.2 Refer to Division 1 for number and manner of submittals.

1.4 DELIVERY, STORAGE, AND HANDLING:

1.4.1 Spiral wrap flagpoles with heavy kraft paper or other protective wrapping and ship in a hard fiber tube or other protective container.

1.4.2 If flagpoles are to be stored on site for extended period of time, remove protective wrapping and store pole bare in a dry place off the ground.

PART 2 - PRODUCTS

2.1 FLAGPOLES:

2.1.1 Description: Ground set, cone tapered seamless aluminum tubing, complete with accessories. Fabricate pole and ship to Project site in one piece if possible; if more than one piece is necessary, provide snug-fitting, precision joints with self-aligning, internal splicing sleeve arrangement for weather tight, hairline field joints. Acceptable manufacturer or equal:

Sunward Flag; Model 30X5156 – External Halyard – 30’-0” High
Sunward Flag; Model 25X5125 – External Halyard – 25’-0” High

2.1.2 Aluminum: Seamless extruded tubing, ASTM B 241, alloy 6063-T6, having a minimum wall thickness of 0.188 inch, tensile strength of not less than 30,000 psi and a yield point of not less than 25,000 psi. Heat treat and age harden after fabrication.

2.1.3 Foundation Tube: For ground-set flagpoles, provide 16 gage galvanized corrugated steel tube or 12 gage rolled steel tube sized to suit flagpole, with welded steel baseplate, lightning ground spike, and steel centering wedges. Provide loose hardwood wedges at top for plumbing pole after erection. Galvanize steel parts after assembly, including foundation tube.

2.1.4 Base Plate: For anchor-bolt mounting, furnish manufacturer's standard cast metal shoe base of same material as flagpole. Furnish and install anchor bolts and lightning ground spike as required.

2.2 FITTINGS:

2.2.1 Finial Ball: Manufacturer's standard flush seam spun aluminum ball, size to match pole butt diameter, gold anodized finish, unless otherwise indicated.

2.2.2 Truck: Ball-bearing, non-fouling, revolving, double sheave truck in cast aluminum housing. Sheaves shall be cast nylon equipped with stainless steel ball bearings, size as recommended by pole manufacturer for top diameter.

2.2.3 Cleats: Cast aluminum cleats attached to the pole with hardened aluminum or stainless steel fasteners, one cleat per halyard set.

2.2.4 Halyards: Continuous No. 10 braided multi-filament polypropylene rope with 2 chrome plated bronze swivel snaps. Provide 2 halyard sets per pole.

2.2.5 Base Flashing Collar: Spun or cast anodized aluminum of size to suit pole butt diameter, finished to match flagpole.

2.3 FINISH:

2.3.1 Finish exposed aluminum surfaces including flagpoles, flashing collar, truck, and cleats with satin finish.

2.3.2 Finish exposed fasteners to match the color and finish of the adjacent material. No paints or coatings will be accepted.

2.3.3 Plate exposed hardware to match as closely as possible the color and finish of the flagpoles, subject to review by the Architect.

2.3.4 Paint all parts of flagpole below ground, including the foundation tube assembly with a shop coat of black asphaltum paint.

2.4 FLAGS:

Provide one 5'-0" by 8'-0" American Flag and one 5'-0" by 8'-0" State of California Flag. Flags shall be 95 percent nylon, colorfast with corrosion resistant grommets. Flags shall meet U.S. Government Specifications CCC-C-439D, and California Specifications 62-J-0l.

PART 3 - EXECUTION

3.1 INSTALLATION:

3.1.1 Flagpole shall be installed by the manufacturer or his authorized representative in accordance with the manufacturer's detailed installation drawings, instructions and recommendations. Flagpole, at completion of installation, shall be completely plumb.

3.1.2 Excavate for pole foundations at least 4 times the pole butt diameter at the bottom and 5 times the pole butt diameter at the top and of minimum depth as required by length of pole.

3.1.3 Set foundation tube in the hole in accordance with the reviewed shop drawings and make certain that grounding spike is properly grounded, then fill the excavation with concrete to elevation indicated. Slope top away from pole and smooth trowel exposed surfaces. Provide concrete composed of portland cement, coarse and fine aggregate, and water mixed in proportions to attain 28 day compressive strength of not less than 3000 psi, complying with ASTM C 94. Concrete materials, placing, and curing shall conform to the applicable requirements of Section 03300.

3.1.4 After the concrete has cured at least 14 days, erect the pole. The pole shall be centered plumb and true in the tube with temporary wood wedges, and then fill the tube with screened dry sand and thoroughly tamp at 6 inch intervals. Moisture seal the tamped sand by application of waterproof calk approved by flagpole manufacturer approximately 2 inches deep around pole and between base and color. Remove temporary wood wedges when recommended by the pole manufacturer.

3.1.5 After the installation has been inspected and reviewed, lower the ornamental base into place.

END OF SECTION

34-003 – 02/25/2014

SECTION 10400

IDENTIFICATION DEVICES

PART 1 - GENERAL

1.1 SUMMARY:

1.1.1 Section Includes: Interior and exterior signs.

1.1.2 Related Documents: The Conditions of the Contract and Division 1 apply to this section as fully as if repeated herein.

1.2 REFERENCES:

The editions of standards and specifications published by the following organizations, and referenced herein, apply to the work only to the extent specified by the reference. Refer to Section 01422 for information concerning availability and use of references.

The Aluminum Association (AA)
American Society for Testing and Materials (ASTM)
American National Standards Institute (ANSI)
Architectural Aluminum Manufacturers Association (AAMA)
U.S. General Services Administration (Fed. Spec.)

1.3 SUBMITTALS:

1.3.1 Shop Drawings: Submit complete shop drawings, catalog cuts, and erection and installation details, as appropriate, for all identification devices. Indicate dimensions, construction details, reinforcement, anchorage, and installation with relation to the building construction.

1.3.2 Samples: Submit samples of all materials, finishes and coatings before fabrication. Samples shall also include all hardware and attachments required for mounting and/or assembly. All finishes and coatings shall show color and shall be submitted on the materials to which they are to be applied.

1.3.3 Submittal procedures and quantities are specified in Section 01334.

1.4 REGULATORY REQUIREMENTS:

1.4.1 Requirements for Physically Disabled: Provide identifying devices meeting the requirements for the physically disabled of the California Code of Regulations (CCR) Title 24 Part 2; Section 1117B.5.1 as indicated on Drawings and as follows:

.1 ADA Accessibility Guidelines for Buildings and Facilities, dated June 26, 1991 as amended April 5, 1993 and January 18, 1994, and July 2004.

.2 Design: Section 1117B.5.1.1 and Figure 11B-6.

.3 Color of Symbol: Section 1117B.5.1.2.

.4 Braille Symbols: Section 1117B.5.2. Contracted Grade 2 Braille shall be used as specifically required in other portions of these standards. Dots shall be 1/10 inch on centers in each cell with 2/10 inch space between cells. Dots shall be raised a minimum of 1/40 inch above the background.

.5 Portions of Letters and Numbers: Section 1117B.5.3.

.6 Character Height: Section 1117B.5.4.

.7 Contrast and Finish of Symbols: Section 1117B.5.5.

.8 Raised Characters and Pictorial Symbol Signs: Section 1117B.6.6.3.

a. Letter Type: Section 1117B.6.6.1.
b. Symbol Size: Section 1117B.6.6.2.
c. Pictorial Symbol Signs: (Pictograms non-geometric) Section 1117B.6.6.3.

.9 Information Posted: Section 1117B.5.8.

.10 Mounting Location and Height (where permanent identification is provided or where signage is required for rooms and spaces): 1117B.5.9.

.11 Doorways Leading to Men's and Women's Sanitary Facilities: Provide signs that comply with the applicable requirements of Sections 1115B.5, 1115B.5.2 and 1117B.5.9.

1.4.2 Electrical components of illuminated signs shall be labeled and listed by Underwriters' Laboratories or other testing agency acceptable to the local Building Official.

PART 2 - PRODUCTS

2.1 MATERIALS:

2.1.1 Aluminum Alloy Products:

.1 Sheet or Plate, ASTM B 209, alloy selected to meet the structural requirements of the specific application. Surface finish shall be smooth, free of extrusion marks or imperfections.

.2 Extrusions: ASTM B 221, alloy 6063-T5, or other alloy of equivalent durability and strength properties. Extrusions shall have a wall thickness of not less than 0.125 inch except 0.093 inch when reinforcing bosses are provided.

.3 Aluminum Castings: Alloy and temper recommended by aluminum producer or finisher for casting process used and for use and finish indicated.

.4 Aluminum for sign faces with routed thru copy shall be minimum 0.063 thick, Alloy 5005 H 34.

2.1.2 Plastic Laminate: FS L-P-387, Type NDP, 1/8 inch thick.

2.1.3 Foam Tape: Black, pressure sensitive adhesive both sides. Acceptable product or equal (no known equal):

3M; #4408 Series

2.2 INTERIOR ACRYLIC PLASTIC PLAQUE SIGNS:

2.2.1 Provide matte finish plaques in sizes shown on drawings. Fabricate of 1/8 inch thick clear acrylic laminated to 1/8 inch thick opaque acrylic. Provide 1/4 inch radius corners.

2.2.2 Graphics Application: Silk screen message to rear surface of clear plastic sheet before application of background color.

2.2.3 Messages: See Drawings for message content, type face and size. Colors shall be as selected by the Architect from the manufacturer's standard colors.

2.2.4 Mounting: Provide countersunk mounting holes in plaques and sufficient mounting screws.

2.3 PLASTIC SIGNS FOR DISABLED:

2.3.1 Materials: Matte finish plastic laminate plaques in sizes indicated. Provide 3/8 inch radius corners.

2.3.2 Graphics Application: Use engraving or graphic blasting through the face layer to expose the second layer to depress the background a minimum of 3/32 inch below the borders, graphic symbols, text, and braille.

2.3.3 Messages:

.1 Title 24 Signage: Provide restrooms with 12 inch diameter circular shaped signs with international graphic symbol for women and equilateral triangular shaped signs with 12 inch sides and the international graphic symbol for men.

.2 ADA Signage: Provide restrooms with square signs with the word "WOMEN" or "MEN" in both text and braille. Text shall have 1-1/2 inch high Helvetica medium type face.

.3 Entrance Signs: All building entrances that are accessible to and usable by physically disabled persons shall be identified with at least one standard sign and with

additional directional signs, as required, to be visible to persons along approaching pedestrian ways.

2.3.4 Mounting: Provide countersunk mounting holes in plaques and sufficient mounting screws. Sign to be 6" by 6" mounted on aluminum/glass doors.

PART 3 - EXECUTION

3.1 EXAMINATION:

3.1.1 Examine substrates to receive adhesively applied identification devices before start of work to ensure that they are free of grease, oil, paint, wax, dust, dirt, or other foreign matter that might inhibit bonding to the substrate.

3.1.2 Do not start work until deficiencies have been corrected. Start of work of this section constitutes acceptance of the surfaces.

3.2 INSTALLATION:

3.2.1 Interior Signs: Install signs at locations shown on drawings. Ensure that signs are installed plumb and true, at mounting heights indicated, and by method specified. Do not install signs on doors or other surfaces until finishes on such surfaces have been applied.

3.2.2 Interior and Exterior Plaque Signs: Install signs at locations indicated. Ensure that signs are installed plumb and true, at mounting heights indicated, and by method specified. Do not install signs on doors or other surfaces until finishes on such surfaces have been applied.

3.2.3 Anchorage: Provide anchorage where necessary for fastening signs securely in place. Anchorage not otherwise specified or indicated shall include expansion shields and powder-driven fasteners, when approved, for concrete and masonry; toggle or molly bolts to stud flanges or steel backing plates in light gage metal framed partitions; full threaded wood screws to wood doors and machine screws to metal doors.

3.3 ADJUST AND CLEAN:

Repair any damage to signs incurred during installation. Replace signs which cannot be repaired to new condition. Clean glass, frames, and other sign surfaces, adjust hardware for proper operation.

END OF SECTION

34-001 – 01/27/2014

SECTION 10523

FIRE EXTINGUISHERS AND CABINETS

PART 1 - GENERAL

1.1 SUMMARY:

1.1.1 Section Includes: Fire extinguishers, fire extinguisher cabinets, and mounting brackets.

1.1.2 Related Documents: The Conditions of the Contract and Division 1 apply to this section as fully as if repeated herein.

1.2 SUBMITTALS:

1.2.1 Product Data: Submit manufacturer's catalog data of extinguishers and extinguisher cabinets. For fire extinguisher cabinets include rough-in dimensions, details showing mounting methods, relationships of box and trim to surrounding construction, door hardware, cabinet type and materials, trim style, door construction and materials.

1.2.2 Submittal procedures and quantities are specified in Division 1.

1.3 REGULATORY REQUIREMENTS:

Fire extinguishers shall be labeled by Underwriters' Laboratories, Inc (UL) for the specified ratings and classifications, as acceptable to the local Building Official.

1.4 DELIVERY, STORAGE, AND HANDLING:

1.4.1 Deliver extinguishers and cabinets to the site in unopened containers, labeled plainly with the manufacturer's names and brands. Deliver cabinets and extinguisher to the site ready for installation.

1.4.2 Store cabinets and extinguisher in safe, dry locations and do not unpack until needed for installation. Handle and install materials in a manner that will protect them from damage.

PART 2 - PRODUCTS

2.1 FIRE EXTINGUISHERS:

2.1.1 Multi-Purpose Dry Chemical Type: UL rated 2A-10B:C in nominal 5 pound capacity. Acceptable products or equal:

Larsen's Manufacturing Co.; Model No. MP5
JL Industries; Cosmic 5E
Potter-Roemer Div.; No. 3005

2.1.2 Dry Chemical Type: UL rated 40B:C in nominal 6 pound capacity. Acceptable products or equal:

Larsen's Manufacturing Co.; Model No. DC5
Potter-Roemer Div.; No. 3306

2.2 FIRE EXTINGUISHER CABINETS:

2.2.1 General: Provide fire extinguisher cabinets where indicate, of suitable size for housing fire extinguishers of types and capacities indicated or specified.

2.2.2 Construction: Provide cabinets of surface mount and semi-recessed type. Acceptable products or equal:

Larsen's Manufacturing Co.; Architectural Series
JL Industries; Ambassador Series
Potter-Roemer Div.; 7000 Alta Series

.1 Box: Fabricate box of not lighter than 22 gage cold rolled steel with manufacturer’s standard prime coat.

.2 Trim: Fabricate trim of not lighter than 20 gage cold rolled steel with manufacturer’s standard prime coat.

.3 Doors: Tubular construction not less than 1/2 inch thick from not lighter than 20 gage cold rolled steel with manufacturer’s standard prime coat. Provide doors full glazed style with 1/8 inch thick, clear float glass. Furnish doors with full length stainless steel piano hinge with brass pin, satin finish aluminum pull handle and self-adjusting roller catch and cylinder lock.

2.3 MOUNTING BRACKETS:

Provide brackets designed to prevent accidental dislodgement of extinguisher, of sizes required for type and capacity of extinguisher specified, plated finish.

PART 3 - EXECUTION

3.1 INSTALLATION:

3.1.1 Mount items specified herein in locations and at mounting heights indicated, or if not indicated, at heights to comply with applicable regulations of local Building Official. Coordinate the cabinet manufacturer's mounting details with other trades as their work progresses.

3.1.2 Prepare recesses in walls for fire extinguisher cabinets as required by type and size of cabinet and style of trim and to comply with manufacturer's instructions.

3.1.3 Securely fasten mounting brackets and fire extinguisher cabinets to structure, square and plumb, to comply with manufacturer's instructions. Use oval head fasteners with exposed surfaces of same finish as cabinet. Fasten cabinets to metal studs or framing with sheet metal screws and to wood studs with full threaded wood screws or with sheet metal screws. Attach surface mounted cabinets to concrete or masonry with expansion anchors and machine screws.

END OF SECTION

34-003 – 01/27/2014

SECTION 10810

TOILET ACCESSORIES

PART 1 - GENERAL

1.1 SUMMARY:

1.1.1 Section Includes: Toilet room accessories, infant-care products.

1.1.2 Related Documents: The Conditions of the Contract and Division 1 apply to this section as fully as if repeated herein.

1.2 REFERENCES:

The editions of standards and specifications published by the following organizations, and referenced herein, apply to the work only to the extent specified by the reference. Refer to Section 01422 for information concerning availability and use of references.

American Society for Testing and Materials (ASTM)
General Services Administration Federal Specifications (Fed. Spec.)

1.3 SUBMITTALS:

1.3.1 Shop Drawings: Provide complete information, diagrams, templates, and installation instructions as required for the installation of all items specified herein, and in sufficient time so that all backing, blocking, framing, and formwork can be properly installed, and so that the work of other trades will not be delayed.

1.3.2 Product Data: Submit manufacturer's literature and brochures, and catalog cuts, showing complete details of all manufactured and fabricated items, including materials, dimensions, gages, profiles, method of mounting, and finishes.

1.3.3 Samples: Submit for each accessory item to verify design, operation, and finish requirements. Approved full-size samples will be returned and may be used in the Work.

1.3.4 Product Schedule: Indicating types, quantities, sizes, and installation locations by room of each accessory required.

1.3.5 Submittal procedures and quantities are specified in Division 1.

1.4 REGULATORY REQUIREMENTS:

Provide toilet accessories meeting the requirements for the physically disabled of the California Building Code (CBC), and ADA Accessibility Guidelines for Buildings and Facilities, dated June 26, 1991 as amended April 5, 1993 and January 18, 1994, and July 2004.

1.5 DELIVERY, STORAGE, AND HANDLING:

Deliver toilet accessories to the site in unopened containers labeled with the manufacturer's name and model numbers as they occur on the submittals. Store accessories in their containers in a dry location.

1.6 GUARANTEE:

In addition to the guarantee requirements of the General Condition, guarantee mirrors against silver spoilage for a period of 10 years from the date of "Notice to Proceed".

PART 2 - PRODUCTS

2.1 MATERIALS:

2.1.1 Stainless Steel: ASTM A 666, Type 304, with No. 4 finish (satin), minimum nominal thickness of 0.0312 inch unless otherwise specified.

2.1.2 Sheet Steel: ASTM A 366, cold rolled, commercial quality, 0.0359 inch minimum nominal thickness; surface preparation and metal pretreatment as required for applied finish.

2.1.3 Galvanized Steel Sheet: ASTM A 653, G60.

2.1.4 Chromium Plating: ASTM B 456, Service Condition Number SC 2 (moderate service), nickel plus chromium electro-deposited on base metal.

2.1.5 Baked-Enamel Finish: Factory-applied, gloss-white, baked-acrylic-enamel coating.

2.1.6 Mirror Glass: Mirror quality plate or float glass in accordance with ASTM C 1036 with silver coating, copper protective coating and nonmetallic paint coating complying with Fed. Spec. DD-M-411B.

2.1.7 Fasteners: Stainless steel except fully concealed fasteners may be galvanized steel.

2.2 FABRICATION:

2.2.1 Surface-Mounted Toilet Accessories: Unless otherwise indicated, fabricate units with tight seams and joints, and exposed edges rolled. Hang doors and access panels with continuous stainless-steel hinge. Provide concealed anchorage where possible.

2.2.2 Recessed Toilet Accessories: Unless otherwise indicated, fabricate units of all-welded construction, without mitered corners. Hang doors and access panels with full-length, stainless-steel hinge. Provide anchorage that is fully concealed when unit is closed.

2.2.3 Framed Glass-Mirror Units: Fabricate frames for glass-mirror units to accommodate glass edge protection material. Provide mirror backing and support system that permits rigid, tamper-resistant glass installation and prevents moisture accumulation.

.1 Provide galvanized steel backing sheet, not less than 0.034 inch and full mirror size, with nonabsorptive filler material. Corrugated cardboard is not an acceptable filler material.

2.2.4 Mirror-Unit Hangers: Provide one of the following mirror-unit mounting system that permits rigid, tamper- and theft-resistant installation, as follows:

.1 One-piece, galvanized steel, wall-hanger device with spring-action locking mechanism to hold mirror unit in position with no exposed screws or bolts.

.2 Heavy-duty wall brackets of galvanized steel, equipped with concealed locking devices requiring a special tool to remove.

2.2.5 Keys: Provide universal keys for internal access to accessories for servicing and resupplying. Provide minimum of 6 keys to Owner as specified in Section 01770.

2.3 TOILET ACCESSORY SCHEDULE:

2.3.1 Basis of Design is Bobrick Washroom Equipment Company.

2.3.2 RA.01 - Combination Unit-Female Toilet Rooms-Partition Mounted (Center Mount): Units capable of dispensing 1000 seat covers and four 1800 sheet rolls of toilet paper and include one 1-1/2 gallon capacity feminine napkin disposal with self-closing doors on both sides of the partition. Mounted centered in partition. Acceptable products or equal:

American Specialties, Inc.
Bobrick Washroom Equipment Company; No. B-357
Bradley Corp.

2.3.3 RA.02 - Combination Unit-Male Toilet Rooms-Partition Mounted (Flush Mount): Units capable of dispensing 1000 seat covers and four 1800 sheet rolls of toilet paper. Mounted with one face flush with partition face for barrier free installation. Acceptable products or equal:

American Specialties, Inc.
Bobrick Washroom Equipment Company; No. B-3471
Bradley Corp.

2.3.4 RA.03 - Combination Unit-Female Toilet Rooms-Recess Mounted: Units capable of dispensing 1000 seat covers and four 1800 sheet rolls of toilet paper and include one 1-1/2 gallon capacity feminine napkin disposal with self-closing doors on

both sides of the partition. Mounted with one face flush with partition face for barrier free installation. Acceptable products or equal:

American Specialties, Inc.
Bobrick Washroom Equipment Company; No. B-3574
Bradley Corp.

2.3.5 RA.04 – Combination Unit-Male Toilet Room Partition Mounted (Center Mount): Units capable of dispensing 1000 seat covers and four 1800 sheet rolls of toilet paper. Mounted center in partition. Acceptable products or equal:

American Specialties, Inc.
Bobrick Washroom Equipment Company; No. B-347
Bradley Corp.

2.3.6 RA.05 - Combination Unit-Male Toilet Rooms-Recessed: Units capable of dispensing 500 seat covers and two 1800 sheet rolls of toilet paper. Acceptable products or equal:

American Specialties, Inc.
Bobrick Washroom Equipment Company; No. B-3474
Bradley Corp.

2.3.7 RA.06 – Towel Dispenser/Waste Receptacle – Surface Mount: Automatic universal roll paper towel dispenser and waste receptacle. Roll towel dispenser to accept universal standard-core non-perforated rolls up to 8 inches with adjustable dispensing length. Electronic sensor to automatically dispense towel when hands placed under the towel opening; battery operated. Equip unit with a removable stainless steel waste receptacle with a capacity of 12 gallons. Hem top and bottom edges of waste receptacles for safe handling. Secure to cabinet with tumbler lock. Acceptable products or equal:

American Specialties, Inc.
Bobrick Washroom Equipment Company; No. B-3979
Bradley Corp.

2.3.8 RA.07 - Towel Dispenser/Waste Receptacle-Recessed: Recessed automatic universal roll paper towel dispenser and waste receptacle. Roll towel dispenser to accept universal standard-core non-perforated rolls up to 8 inches with adjustable dispensing length. Electronic sensor to automatically dispense towel when hands placed under the towel opening. Battery operated. Equip unit with a removable stainless steel waste receptacle with a capacity of 12 gallons. Hem top and bottom edges of waste receptacles for safe handling. Secured to cabinet with tumbler lock. Acceptable products or equal:

American Specialties, Inc.
Bobrick Washroom Equipment Company; No. B-3974
Bradley Corp.

2.3.9 RA.08/09 - Grab Bars: Stainless steel tubing 1-1/2 inch diameter by 18 gage wall thickness, swagged and heliarc welded to minimum 11 gage flanges. Lock flanges to concealed 13 gage stainless steel mounting plate with 3 stainless steel set screws. Furnish bars with manufacturer's standard mounting anchor plates for stud walls. Acceptable products or equal:

American Specialties, Inc.
Bobrick Washroom Equipment Company; B-6806 Series
Bradley Corp.;

2.3.10 RA.10 – Soap Dispensers-Recessed: Provide container with a capacity of 45 fluid ounces and an unbreakable refill indicator and concealed stainless steel piano-hinge filler with tumbler lock. Provide all purpose type valves as specified herein. Acceptable products or equal:

American Specialties, Inc.
Bobrick Washroom Equipment Company; No. B-306
Bradley Corp.

.1 Soap Valves: Fabricate O-ring seals, suitable for use with synthetic detergents, hand lotions and liquid soaps. Stainless steel inner spring and spout. Chrome plated brass housing.

2.3.11 RA.11 – Baby Changing Station, Surface-Mounted Unit: Design of unit shall be counter top surface mounted. Bed shall have smooth concave changing area with a nylon safety strap and universal instruction graphics. Acceptable products or equal:

Brocar Products, Inc.
Koala Corporation; Surface-Mounted KB112-01CT
Safe-Strap Company

2.3.12 RA.12 – Seat Cover and Toilet Tissue Dispenser – Surface Mounted: Units capable of dispensing 500 seat covers, and two 1800 sheet rolls of toilet paper. Surface mount to toilet partition wall. Acceptable products or equal:

American Specialties, Inc.
Bobrick Washroom Equipment Company; No. B-3479
Bradley Corp.

2.3.13 RA.13 – Not used.

2.3.14 RA.14 – Circular Waste Chute: Circular waste chute for mounting in countertops shall be type 300 stainless steel with 5-7/16 inch inside diameter, rolled lip and bright polished finish on exposed surfaces. Waste chute opening shall provide access to deposit waste into waste receptacle (separate – RA.15 below) placed under the countertop. Acceptable products or equal:

American Specialties, Inc.
Bobrick Washroom Equipment Company; No. B-529

Bradley Corp.

2.3.15 RA.15 – Surface-Mounted Waste Receptacle: Waste receptacle shall be equipped with interior hooks, have reinforced mounting screw holes, and shall be furnished with a removable heavy-gage vinyl liner. Unit shall have a capacity of 20 gallons. Acceptable products or equal: Acceptable products or equal:

American Specialties, Inc.; 0825
Bobrick Washroom Equipment Company; B-275
Bradley Corp.; 700 Series

2.3.16 RA.16 – Mop and Broom Holder with Shelf: Fabricate units consisting of an 8 inch wide shelf and 15 inch high wall flange of one piece construction with welded gussets. Furnish unit 34 inches long with 3 mop and broom holders and 4 hooks mounted on the wall flange. Fabricate the wall flange, shelf and gussets of 18 gage stainless steel. Mop holders spring loaded rubber cam type designed to accommodate handles from 7/8 inch to 1-1/4 inches in diameter. Fabricate hooks of 16 gage stainless steel welded to the wall flange. Acceptable products or equal:

American Specialties, Inc.; No. 1308
Bobrick Washroom Equipment Company; No. B-239
Bradley Corp.; No. 9933

PART 3 - EXECUTION

3.1 EXAMINATION:

3.1.1 Before covering wall framing with gypsum board, examine framing to ensure that backing plates and grab bar mounting kits have been installed behind surface mounted accessories in such positions as to receive all attachment screws.

3.1.2 Verify that pipes, vents, conduits and other construction features do not protrude into rough wall opening space required for recessed accessories.

3.1.3 Do not proceed with the work until unsatisfactory conditions have been resolved.

3.2 INSTALLATION:

3.2.1 Install grab bars using manufacturer's recommended mounting kits.

3.2.2 Install accessories in accordance with the manufacturer's printed instructions except install surface mounted accessories other than grab bars with molly or toggle bolts to metal studs or backing plates attached directly to studs.

3.2.3 Secure mirrors to walls in concealed, tamperproof manner with special hangers, toggle bolts, or screws. Set units plumb, level, and square.

3.3 ADJUSTING AND CLEANING:

3.3.1 Adjust toilet accessories for proper operation and verify that mechanisms function smoothly. Replace damaged or defective items.

3.3.2 Clean and polish all exposed surfaces in strict accordance with manufacturer's recommendations after removing temporary labels and protective coatings.

END OF SECTION

34-003 – 02/25/2014

SECTION 13010

MISTING FOG SYSTEM

PART 1 - GENERAL

1.1 SUMMARY:

1.1.1 Section Includes: Misting fog system including pump unit, distribution line, hose and tube fittings, atomization line, valves, nozzles, and related accessories and specialties as indicated in this Specification Section and on the Drawings.

1.1.2 Related Documents: The Conditions of the Contract and Division 1 apply to this section as fully as if repeated herein.

1.2 SUBMITTALS:

1.2.1 Product Data: Submit manufacturer's technical product data, installation instructions, dimensional drawings, and recommendations for each item furnished under this Section:

.1 Pump unit.
.2 Distribution line.
.3 Automization line.
.4 Hose and tube fittings.
.5 Nozzles.
.6 Underground conduit

1.2.2 Shop Drawings: Provide shop drawings showing equipment space layout showing all plumbing, equipment, and piping. Show complete misting fog layout indicating locations for all piping, components, and mounting elements, including components that are not included within this Section. All piping, components, and mounting elements shall be dimensionally accurate.

1.2.3 Operation and Maintenance Data: Provide operating instructions of the system including methods of starting and stopping the system, and checking the system for normal operation. Provide maintenance instructions that include a recommended preventative maintenance schedule and spare parts list.

1.2.4 Submittal procedures and quantities are specified in Section 01334.

1.3 DELIVERY, STORAGE, AND HANDLING:

1.3.1 Deliver materials to the site in the original unbroken manufacturer's wrapping material with the original labels thereon, each package or item identifiable by manufacturer's name and brand designation.

1.3.2 Store materials elevated off the ground in dry weathertight enclosure or under weathertight tarpaulins. Provide adequate ventilation to avoid condensation.

PART 2 - PRODUCTS

2.1 GENERAL:

2.1.1 Products shown on the Drawings but not specified herein shall be provided in accordance with information shown on the Drawings, and the general provisions of this part of the Specifications. Acceptable product or approved equal:

Koolfog, Inc.

2.2 MISTING FOG SYSTEM:

2.1.2 High-Pressure Pump Unit:

.1 Sahara series high-pressure pumps as indicated on Fog Pump Schedule on the Drawings.

a. Catalog numbers as indicated on Drawings.
b. Direct drive triplex plunger pump.
c. Controls:
   (1) Hand/Off/Auto operating modes.
   (2) Remote Start/Stop Control: (1) Maintained voltage-free Contact closure input.
d. Diagnostics:
   (1) Glycerin filled discharge gauge.
   (2) Hour meter usage indicator.
e. Protection:
   (1) Low water pressure cutoff.
   (2) Safety relief valve.
   (3) Pump thermal relief valve.
   (4) Motor thermal overload.

2.1.3 High-Pressure Distribution Line:

a. Stainless Steel Distribution Line:
   (1) #304 Stainless steel – Catalog No. SSM0006
b. High-Pressure Flexible Distribution Line:
   (1) Black perforated polyurethane cover, single polyester braid reinforcement, polyester elastomer tube – Catalog No. HPH0004.

2.1.4 Atomization Line:

a. Misting Line:
   (1) #304 Stainless steel welded or seamless tubing, 3/8” O.D., .035” wall. Catalog No. KMA2X.

2.1.5 Hose and Tube Fittings:

a. Compression Fittings:
(1) Two-ferrule design. Tube-to-tube connection, Tube-to-NPT.

2.1.6 Nozzles:

a. Atomization Nozzle for Cooling or Humidification:
(1) Material: Brass with stainless steel orifice plate.
(2) Thread: 12-24 UNC.
(3) Anti-drip body, cleanable. Catalog No. KMN70.

2.1.7 Underground Conduit:

.1 Electrical PVC conduit, Schedule 40 shall be used as conduit for underground routing of high-pressure flexible distribution line.

.2 Radius elbow fittings shall have a minimum bend radius of no less than six times the diameter of the conduit.

.3 Bends not of radius elbow fittings shall have a minimum bend radius of no less than six times the diameter of the conduit.

.4 Bends shall not exceed 360 degrees from opening of a conduit run.

.5 Size conduit as listed below;

High-Pressure Flexible Distribution Line	Conduit Size
Cat No. HPH0004	1” PVC Conduit, Schedule 40
Cat No. HPH0006	1-1/2”PVC Conduit, Schedule 40
Cat No. HPH0008	2” PVC Conduit, Schedule 40

.6 Polyprepylene pull line with a minimum rate of 210 lbs. shall be installed in all conduit runs.

.7 Conduit Termination points shall be stubbed up to a vertical orientation, unless otherwise noted on the Drawings, labeled and taped sealed.

.8 Conduit shall be installed in accordance with ASTM F 512.

PART 3 - EXECUTION

3.1 FOG SYSTEM:

3.1.1 High-Pressure Pump Units:

.1 Install and connect equipment in accordance with manufacturer’s written instructions and recommendations.

.2 Before pumps are operated, ensure the water treatment system is fully operational, purged of air, and all isolation valves servicing the pumps are fully opened.

.3 Provide drain piping as needed and extend to nearest drain.

3.1.2 High-Pressure Distribution Line:

.1 Protect all openings in the distribution line during construction to prevent entrance of foreign matter.

.2 Flexible high-pressure distribution lines shall be completely lubricated when pulled through conduit. Lubricator shall be applied immediately before and during the pull.

.3 Do not bend flexible high-pressure distribution lines during installation, either permanently or temporarily, to radii less than 5 times the outer diameters.

.4 Cut stainless steel distribution line to measurements established at the site. Work into place without springing or forcing.

.5 Install stainless steel distribution line straight and true to bear evenly on supports.

.6 Supports for stainless steel distribution line shall not exceed 4’-0” spacing.

.7 Slope piping and arrange system to drain at low points.

.8 Maintain clearance for access to valves and fittings. Install valves with stems upright or horizontal.

.9 Flush distribution lines to remove foreign matter prior to commissioning.

3.1.3 Atomization Line:

.1 Protect all openings in the distribution line during construction to prevent entrance of foreign matter.

.2 Cut atomization line to measurements established at the site. Work into place without springing or forcing.

.3 Install atomization line straight and true to bear evenly on supports.

.4 Supports for atomization line shall not exceed 3’-0” spacing.

.5 Slope piping and arrange system to drain at low points.

.6 Maintain clearance for access to valves and fittings. Install valves with stems upright or horizontal.

.7 Flush atomization line to remove foreign matter prior to commissioning.

3.2 COMMISSIONING:

3.2.1 Flushing:

.1 All distribution lines and atomization lines shall be flushed of foreign matter with water, pumped from the high-performance pump, for a duration of 10 minutes.

.2 Once all distribution lines and atomization lines are flushed, then nozzles shall be installed on atomization line.

3.2.2 Pressure Testing:

.1 All distribution lines and atomization lines shall be pressure tested at a pressure of 1000 psi, using water pressure from the high-pressure pumps, for a duration of 10 minutes.

.2 Replace or repair any part that leaks. Repeat test until criteria are met.

3.2.3 Start-Up:

.1 The high-pressure pumps shall be set to normal operating pressure.

.2 The system shall operate fully automated and uninterrupted for a duration of 1 hour.

.3 Replace or repair any part that does not conform. Repeat test until criteria are met.

END OF SECTION

03/05/2014

SECTION 16010
BASIC ELECTRICAL REQUIREMENTS

PART 1 - GENERAL

1.01 SECTION INCLUDES

A. This Section provides the Basic Electrical Requirements which supplement the General Requirements of Division 1 and apply to all Sections in Division 16.

1.02 RELATED SECTIONS

A. Excavating, Backfilling and Compacting for Utilities: Section 02222.

B. Cast-in-Place Concrete: Section 03300.

1.03 BASIC ELECTRICAL REQUIREMENTS

A. Drawings and Specifications Coordination:

1. For purposes of clearness and legibility, the Electrical Drawings are essentially diagrammatic. The size and location of equipment is indicated to scale whenever possible. Contractor shall verify all conditions, data and information as indicated on Drawings and in Specifications Sections where Electrical work is required.

2. The Electrical Drawings indicate required size and points of termination of conduits, number and size of wires, and suggest proper route for conduit. It shall be responsibility of Contractor to install conduits with minimum number of bends to conform to structure, avoid obstructions, preserve headroom, keep openings and passageways clear, and meet all applicable code requirements. Routing of conduits may be changed, if approved by the District Electrical Inspector, provided that the length of any conduit run is not increased or decreased more than 10% of the length indicated on Drawings.

3. It is intended that outlets be located symmetrical with Architectural elements not withstanding fact that locations indicated on Drawings may be distorted for clarity.

4. The Architectural and Structural Drawings take precedence over the Electrical Drawings in the representation of general construction work. Drawings of the various trades take precedence in representation of work of those trades. Contractor shall refer to all Drawings to coordinate the Electrical work with work of other trades.

B. Terminology:

1. Term "signal system" shall apply to clock, bell, fire alarm, annunciator, sound, public address, buzzer, public telephone, television, inter- communication, and security systems.

2. Term "low voltage" shall apply to systems operating at 600 volts and under.

3. Term "provide" used on Drawings and elsewhere in the Specifications shall be considered to mean "furnish and install".

4. Term "UL" means Underwriters Laboratories Inc.

C. Ordinances and Regulations:

1. Electrical work shall meet requirements of local authorities having jurisdiction including municipal ordinances, City Building code, the California Code of Regulations, Title 24, the Safety Orders of the State Division of Industrial Safety, and the Fire and Panic Safety Standards of the State Fire Marshal. Material and labor shall conform to Regulations of the National Board of Fire Underwriters for Electrical Wiring and Apparatus. All new material shall be "UL" listed or shall be listed by the City of Los Angeles, including amendments thereto, effective on date of openings bids for work, is hereby made a part of this Specification, and shall apply to all work both within and outside the City of Los Angeles, except for those portions which conflict with requirements of local authorities.

2. Electrical work shall meet requirements of latest California Electrical Code as indicated and specified.

D. Structural Considerations for Conduit Routing:

1. Where conduits are to pass through or will interfere with any Structural member, or where notching, boring or cutting of the structure is necessary, or where special openings are required through walls, floors, footings, or other buildings elements, to accommodate the electrical work, such work shall conform to State Building Code, Part 2, Title 24, Section 2606 for conduits and pipes embedded in concrete and Section 2517 (g) 8, 9, for notches and bored holes in wood; for steel, as detailed on the Structural Drawings.

2. Where a concrete encasement for underground conduit abuts a foundation wall or underground structure which the conduits enter, encasement shall, rest on a haunch integral with wall or structure, or shall extend down to footing projection, if any, or shall be doweled into structure unless otherwise indicated. Underground structures shall include manholes, pull boxes, vaults and buildings.

3. Holes required for conduit entrances into speaker poles, floodlight poles or other poles, shall be drilled and conduit nipple or coupling shall be welded to poles. Welds shall be by the electric arc process and shall be continuous around nipple or coupling.

E. Electrically Operated Equipment and Appliances:

1. Equipment and Appliances Furnished by Contractor:

a. The Electrical work shall include furnishing and installing wiring enclosures for, and the complete connection of all electrically operated equipment and appliances and any electrical control devices which are specified to be furnished and installed in this or other Electrical Sections of these Specifications, except Electrical work specified or indicated to be in the Mechanical work. All wiring enclosures shall be installed concealed except where exposed work is indicated on Electrical Drawings.

b. Connections shall be made as necessary to completely install equipment ready for use. Equipment shall be tested for proper operation and, if motorized, for proper rotation. If outlets of incorrect Electrical characteristics or if any equipment fails to operate properly, Contractor shall report to the District=s Inspector in writing, listing buildings and rooms in which located, the name, make and serial number of equipment, and a description of defect.

2. Equipment and Appliances Furnished by Others:

a. Equipment and appliances indicated on Drawings as N.I.C. (Not in Contract), "Furnished by Others", or "Furnished by the District", will be delivered to the Site. Required Electrical connections shall be made for all such equipment and appliances in accordance with accepted trade practices under direction of the Electrical Engineer. All motorized equipment will be furnished factory wired to a control panel or junction box unless otherwise indicated. Appliances will be furnished equipped with portable cord and cap. Provide disconnect switches where required.

b. Connections to equipment furnished under other Sections of this Specification shall be part of the Electrical Work. Work shall include internal wiring, installation, connection and adjustment of bolted drive motors in which the motor is supplied as a separate unit and connections only for equipment furnished with factory installed internal wiring, except as further limited by Drawings and other Sections of this Specification. Work shall include furnishing and installing suitable outlets, disconnecting devices, starters, push button stations, selector switches, conduit, junction boxes, and wiring necessary for a complete Electrical installation. Work shall also include furnishing and installing conduit and outlet box, if needed for control system, furnished under Mechanical. Devices and equipment furnished shall be of same type used elsewhere on job or as specified.

c. Electrical equipment furnished under other Sections of this Specification for installation and connection under work of this Section shall be delivered to the installation location by the Contractor furnishing the equipment.

d. Mechanical equipment furnished under other Sections of this Specification, and requiring Electrical connection under this Section, will be set in place by Contractor furnishing equipment.

e. Suitability and condition of equipment furnished by other Sections of this Specification shall be determined in advance of installation. Immediate notice of damage, unsuitability or lack of parts shall be given to the Architect.

F. Protection of materials

1. Provide for safety and good condition of all materials and equipment until final acceptance of project by the Owner. Protect all materials and equipment from damage and provide adequate and proper storage facilities during progress of work. All damaged and defective work shall be replaced prior to final inspection.

G. Cleaning

1. Exposed parts of Electrical work shall be left in a neat, clean, usable condition. Finished painted surfaces shall be unblemished and metal surfaces shall be polished.

2. Thoroughly clean all parts of apparatus and equipment. Exposed parts which are to be painted shall be thoroughly cleaned of cement, plaster and other materials. Remove grease and oil spots with solvent. Such surfaces shall be wiped and all corners and cracks scraped out. Exposed rough metal work shall be smooth, free of sharp edges, carefully steel brushed to remove rust and other spots, and left in proper condition to receive finish painting.

3. Contractor shall remove from the Site all debris and rubbish caused by the

Electrical work. He shall thoroughly clean building of dirt, debris, rubbish, marks, etc., caused by performance of work.

PART 2 - PRODUCTS - NOT USED

PART 3 - EXECUTION

3.01 INSTALLATION OF EQUIPMENT AND APPLIANCES

A. Conduit stubs for equipment shall be terminated in a coupling flush with finished floor and shall be extended with rigid metallic conduit to a motor starter or junction box on the equipment.

B. If connection is from a flush wall-mounted junction box, install a weatherproof universal box extension and adaptor by Bell Electric Company, and extend with rigid metallic conduit to motor starter or junction box on equipment.

C. All exposed final connections to equipment shall be by a water tight flexible conduit, unless otherwise indicated. A maximum of 36" of flexible conduit may be used except that all extensions from flush floor couplings shall be rigid conduit to a distance not less than 6" above floor.

D. Flexible conduit for all motors, shop and cafeteria equipment and other equipment, including HVAC equipment, shall be liquid-tight, flexible conduit, and shall contain a code size insulated green bond wire.

E. All exposed conduit shall be run vertically and horizontally following general configuration of the equipment, using cast threaded hub conduit fittings where required and shall be clamped to equipment with suitable iron brackets and one hole pipe straps.

F. Connectors for flexible steel conduit shall be the type which threads into convolutions of conduit. Connectors for water-tight flexible metal conduit shall be approved for such use and shall be installed to make a watertight connection.

3.02 CLOSE OUT OF PROJECT

A. Contractor shall provide the following items at the end of the project:

1. As-built drawings on AutoCAD R.14 or 2002 on disk with one (1) set of prints.

2. Ground fault test report.

3. Three (3) sets of all warranty information with fixture cuts of equipment in a book.

END OF SECTION

PART 1 - GENERAL

1.01 SECTION INCLUDES

A. Boxes, Enclosures, Keys and Locks.

B. Receptacles.

C. Identifications and Signs.

1.02 RELATED SECTIONS

A. Basic Electrical Requirements: Section 16010.

1.03 SUBMITTALS

A. Submit in accordance with Section 01300: Submittals.

PART 2 - PRODUCTS

2.01 BOXES, ENCLOSURES, KEYS AND LOCKS

A. Outlet Boxes and Fittings:

1. Outlet boxes used in concealed work shall be galvanized or sheardized steel, pressed or welded type, with knockouts.

2. In exposed work, outlet boxes and conduit fittings required where conduit runs change direction or size, shall be cast metal with threaded cast hubs cast integral with box or fitting. Boxes and fittings shall not have unused spare hubs except as otherwise indicated or specified.

3. Fittings shall be cast metal and non-corrosive. Ferrous metal fittings shall be cadmium plated or zinc galvanized. Castings shall be true to pattern, smooth, straight, with even edges and corners, of uniform thickness of metal, and shall be free of cracks, gas holes, flaws, excessive shrinkage and burnt-out sand.

4. Covers for fittings shall be galvanized steel or non-corrosive aluminum and shall be designed for particular fitting used.

5. Plaster rings shall be provided on all flush mounted outlet boxes except where otherwise indicated or specified. All plaster rings shall be same depth as finished surface.

6. Factory made knock-out seals shall be installed to seal all box knock-outs which are not intact.

7. At each location where flexible conduit is extended from a flush outlet box, provide and install a weatherproof universal box extension adapter by Bell Electric Company.

B. Junction and Pull-Boxes:

1. Junction and pull-boxes, in addition to those indicated, shall only be used where absolutely necessary.

2. Interior and non-weatherproof boxes shall be constructed of blue or galvanized steel with ample laps, spot welded, and shall be rigid under torsional and deflecting forces. Boxes shall have auxiliary angle iron framing where necessary to ensure rigidity. Covers shall be fastened to box with a sufficient number of brass machine screws to ensure continuous contact all around. Flush type boxes shall be drilled and tapped for cover screws at Site if boxes are not installed plumb. All surfaces of pull and junction boxes and covers shall be given one coat of metal primer, and one coat of aluminum paint.

3. Weatherproof pull and junction boxes shall conform to foregoing for interior boxes with following modifications: Cover of flush mounting boxes shall have a weather-tight gasket cemented to and trimmed even with cover all around. Surface or semi-flush mounting pull and junction boxes shall be UL approved as rain-tight and shall be complete with threaded conduit hubs. All exposed portions of boxes shall be galvanized and finished with a prime coat and coat of baked-on grey enamel.

4. All junction and pull-boxes shall be rigidly fastened to the structure and shall not depend on conduits for support.

5. Underground Concrete Pull Boxes:

   a. Precast Concrete Pull Boxes. Concrete pull boxes shall be traffic type, reinforced for H- 20 Traffic bridge loading, precast concrete. Pull boxes with inside dimensions 2'-0"x 3'-0" x 3'-0"D shall consist of a base section, top ring and cover. Base section shall have two 10"x10" knockouts in each 3'-0" side, and one 20"x20" knockout in each 2'-0" side. Pull boxes with inside dimension 4'-0 x 4'-0"x 4'- 0"D shall consist of a base section, mid section, topping, and cover. Base section shall have two 8"x 16" knockouts on each of two opposite sides, and one 20" x 20" knockout on each of the other two opposite sides. All pull boxes shall have a minimum of 6" diameter sump knockout, and 1" diameter ground rod knockout. In each pull box, furnish and install cable racks on walls. Each rack shall be equipped with 3 porcelain cable holders on a vertical steel mounting bar. Each pull box shall have 3/4" diameter pull irons. Covers shall be marked "Electrical", "Power" "Telephone", "Signal" or "Ground", as required. Pull boxes shall be as manufactured by Jensen Precast, or approved equal.

   b. Provide end bells in all duct entrances. Terminate each metal conduit with insulated bushing having grounding terminal, O.Z. Type "Big"

   c. Place pulling irons on opposite walls and below horizontal centerlines of ducts and bricked-up openings, and in bottom. Install pulling irons with each end hooked around a reinforcing bar.

   d. Damp-proof exterior walls and tops of below grade with two coats of bituminous coating. A. C. Horn Company "Dehydrating" No. 4, Sonneborn Sons, Inc., "Hydrocide 648", Toch Brothers "RIW Marine Cement Semi-Mastic", or approved equal.

   e. Install a floor drain in every concrete pullbox into a sump containing 10 cubic feet of 1" crushed rock; minimum size 48" deep and 36" diameter. Provide 36" length of tile pipe extending down into the sump. Provide a grille over the top opening of pipe.

f. Install a 3/4" diameter, 10'-0" copperweld steel ground rod in every power concrete pull- box. Locate near a wall with 6" projection above floor for ground clamps. Permanently and effectively ground all metal equipment cases, cable racks, etc., in all pull boxes.

g. Provide a 6" deep sand base under each pull box.

h. Identify all power and signal cables by tagging in all manholes and pull boxes. Tie securely to cables with nylon cord or insulated type TW wire. Tie so that turns of wires do not form a closed electrical circuit.

i. Covers for all underground utility boxes shall be Tamper Resistant Locking Lid type from Jensen Metal Tech.

6. Underground utility boxes shall be reinforced concrete with non-setting shoulders to prevent settlement following installation. Boxes shall be furnished with cast iron cover with finger hole, size as indicated on Drawings. Utility boxes shall be as manufactured by Jensen Precast, or approved equal.

7. Manholes, vaults and pull-boxes required by utility company, and installed by Electrical Contractor, shall meet all requirements of utility company.

2.02 RECEPTACLES

A. Receptacles:

1. Duplex receptacles with more than one (1) duplex connected to circuit breakers shall be specification grade, 15 amperes, 125 volts, 3 wire, side wired with binding screws, parallel slots, U-ground, plaster ears and captive mounting screws. Body shall be phenolic, plastic or bakelite. Receptacles shall be heavy duty, 3 blade current carrying contacts and double wide flat blade ground contacts. Receptacles shall be Hubbell, Leviton, as specified on plans or approved equal, color shall be per Architect.

2.03 IDENTIFICATION AND SIGNS

A. Name Plates:

1. Following equipment shall be provided with name plates unless otherwise specified: switchboards, motor control centers, control panels, push button stations, time switches, contactors, motor starters, motor switches, lighting panelboards, power panelboards, and terminal cabinets.

2. Following devices shall be provided with circuit call out engraved in plate of device, receptacles and switches.

3. Name plates shall adequately describe function, voltage and phase of particular equipment involved. Where name plates are detailed or described on Drawings, inscription and size of letters shall be as indicated. For lighting and power panels, name plates shall indicate panel designation, voltage and phase of panel. For terminal cabinets, name plates shall indicate system housed therein.

4. Name plates shall be black and white nameplate stock of bakelite with characters cut through black exposing white. Plates shall have beveled edges and shall be securely fastened in place with #4 Phillips head, cadmium plated steel, self-tapping screws. Characters shall be 3/16" high, unless otherwise indicated.

B. Markings:

1. Following equipment and controls shall have markings:

   a. Surface-mounted starters, switches, disconnect switches, contactors, and other devices controlling motors and appliances. Abbreviations acceptable to the District's Electrical Inspector, along with an identifying number, shall be used. Markings shall be done with locking type stencils using paint of a contrasting color. Figures shall be 3/8" high unless otherwise indicated. Dymo Industries, Inc., self-sticking plastic labels, having embossed characters made with a typewriter, may be used, in lieu of stencils and paint.

2. High Voltage: High voltage switchboards, cabinets, boxes, and conduits exposed in accessible locations, including under buildings and in attics, shall be marked "DANGER-HIGH VOLTAGE". Markings for switchboards shall consist of an #18 gage steel, porcelain enamel sign, of standard manufacture. Markings for boxes, cabinets and conduits shall be by means of stenciling or printed self-adhesive markers, Westline "Tel-A-Pipe". Letters shall be black on orange background and not less than 1-7/8" high. On conduit runs, marking shall be applied at intervals not exceeding 10' in any individual area. Markings shall be done only after other painting has been completed.

3. Where a building or structure is supplied by more than one service, or any combination of branch circuits, feeders, and services, a permanent plaque or directory shall be installed at each service disconnect location denoting all other services, feeders, and branch circuits supplying that building or structure and the area served by each per.

4. Where a building or structure has any combination of branch circuits, feeders, or services passing through it, a permanent plaque or directory shall be installed at each feeder and branch-circuit disconnect location denoting all other services, feeders, and branch circuits passing through that building or structure and the area served by each.

C. Warning Signs:

   1. Provide a warning sign on outside of each door or gate to rooms or enclosures containing high voltage equipment. Signs shall read: "DANGER- HIGH VOLTAGE-KEEP OUT". Signs shall be 7" x 14" with all lettering 1" high except word "DANGER" which shall have 1-1/2" high letters.

   2. Provide a warning sign on each high voltage non-load break disconnect and fused cutout (not oil filled). Signs shall read: "DO NOT OPEN UNDER LOAD". Lettering shall be 1" high.

   3. Signs shall be of standard manufacture #18 gage steel, with porcelain enamel finish. Letters shall be red on white background.

PART 3 - EXECUTION

3.01 BOXES; INSTALLATION AND SUPPORT

A. Outlet boxes shall be flush with finished surface of wall or ceiling. They shall be plumb and securely fastened to structure, independent of conduit. Except where otherwise indicated, factory-made bar hangers shall be used to support outlet boxes.

B. Outlet boxes installed in suspended or furred ceilings with steel runner or furring channels, shall be supported, except where otherwise indicated, by a Unistrut #P-4000

channel spanning main ceiling runner channels. Each box shall be supported from its channel by a 3/8" 16 threaded steel rod with a Unistrut #P-4008 nut and a Tomic #711-B Adapta-Stud. Rod shall be tightened to a jamb fit with channel and its nut. Box shall be locked to the rod by means of a 2" locknut on stud and a 3/8" 16 hex nut locking stud to rod.

3.02 IDENTIFICATION OF CIRCUITS AND EQUIPMENT

A. Switchboards, motor control centers, transformers, panelboards, circuit breakers, disconnecting switches, starters, pushbutton control stations and other apparatus used for operation or control of circuits, appliances or equipment, shall be properly identified by means of descriptive nameplates or tags permanently attached to apparatus or wiring.

B. Nameplates shall be engraved laminated bakelite or etched metal. Shop drawings with dimensions and format shall be submitted to the Architect before installation. Attachment to equipment shall be with escutcheon pins, rivets, self-tapping screws or machine screws. Self-adhering or adhesive backed nameplates are not acceptable.

C. Tags shall be attached to feeder wiring in conduits at every point where runs are broken or terminated, and shall include pull wires in empty conduits. Circuit, phase and function shall be indicated. Branch circuits shall be tagged in panelboards and motor control centers. Tags may be made of pressure-sensitive plastic or embossed self-attached stainless steel or brass ribbon.

D. Cardholders and cards shall be provided for circuit identification in panelboards. Cardholders shall consist of metal frame retaining a clear plastic cover permanently attached to inside of panel door. List of circuits shall be typewritten on a card. Circuit description shall include name or number of circuit, area, and connected load.

E. Junction and pullboxes shall have covers stencilled with box number when indicated on Drawings, or circuit numbers according to panel schedules. Data shall be lettered in a conspicuous manner with a color contrasting with finish.

F. Name as designated in part 2A shall be correctly engraved with a legend indicating function or areas, when required by Codes, or indicated on Drawings.

END OF SECTION

PART 1 - GENERAL

1.01 SCOPE

A. Work Included: All labor, materials, appliances, tools, equipment, facilities, transportation and services necessary for and incidental to performing all operations in connection with furnishing, delivery and installation of the work of this Section, complete as shown on the drawings and/or specified herein. Work includes, but is not necessarily limited to the following:

1. Examine all other sections for work related to those other sections and required to be included as work under this section.

2. General provisions and requirements for electrical work.

1.02 SUBMITTALS (ADDITIONAL REQUIREMENTS)

A. Submit product data sheets for all wire, conduit, fittings and splicing materials.

B. Submit material list for all conduit and fittings.

PART 2 - PRODUCTS

2.01 CONDUIT

A. Rigid steel conduit: Hot-dip galvanized, zinc coated. Threads shall be galvanized after fabrication.

B. PVC coated rigid steel conduit: Hot-dipped galvanized after fabrication, with bonded 20 mil coating of polyvinyl chloride.

C. Electrical metallic tubing: Galvanized. Couplings and connectors, seamless steel construction and of the water-tight compression type with insulated throat, Thomas & Betts Co. #5123 Series or approved equal.

D. Flexible conduit: Galvanized steel. Connector shall be Thomas & Betts Co. #3312 and/or #3332 Series, complete with insulated throat, or approved equal.

E. Liquid-tight flexible conduit: Sealitite Type U.A. with Appleton Series "ST" connectors.

F. Nonmetallic conduit: Polyvinyle chloride, Schedule 40 or type "EB" (concrete encased).

2.02 WIRE AND CABLE

A. All wire and cable shall be copper, 600 volt, #12 AWG minimum unless specifically noted otherwise on the drawings. Conductors #10 AWG and smaller shall be solid. Conductors #8 AWG and larger shall be stranded. Type of insulation as noted on drawings and as follows:

1. Type THHN/THWN insulation used for #4 AWG and smaller.

2. Type THW or THHN/THWN insulation used for #2 AWG and larger.

3. Type THW used for all panel feeders and service conductors.

4. Type THHN insulation used for circuit conductors installed in fluorescent lighting fixture raceways, for conductors connected to the secondary of fluorescent or mercury vapor fixture ballast or other hot locations.

5. Type XHHW or THWN insulation shall be used where conductors are installed in conduit exposed to the weather.

6. The following color code for branch circuits:

   Neutral . . . . White (Tape feeder neutrals with white tape near connections)

   <u>120/208 Volt</u>

   Ground . . . . . Green
   Phase A . . . . Black
   Phase B . . . . Red
   Phase C . . . . Blue

7. Feeders identified as to phase or leg in each panelboard with printed identifying tape.

8. Panel feeders copper or aluminum: Wire size shown on the drawings is for copper: if aluminum wire is proposed, increase wire size to ampere capacity of copper wire and voltage drop not to exceed that of copper feeders indicated on drawings. Increase conduit size and quantity as required by code.

9. Color coding for mechanical and plumbing control wiring shall be an agreed upon color code between the Mechanical/Plumbing Contractor and the Electrical Contractor, and color code shall be submitted to the Architect in writing for approval prior to installation.

PART 3 - EXECUTION

3.01 TRENCHING, FOOTINGS, SLEEVES

A. Provide trenching, concrete encasement of conduits, back filling, and compaction for the underground electrical work, in accordance with applicable sections of this specification.

B. Provide footings for all post and/or pole-mounted lighting fixtures: concrete shall conform to the applicable sections of this specification.

C. Sleeves

1. Provide sleeves for raceways and conduit passing through the following construction elements:

   a. Concrete foundations, floors, walls and slabs.
   b. Lath and plaster walls and ceilings.

2. Sleeves shall extend 1 2 inches above floors, except under floor standing electrical equipment. Sleeves shall be flush with walls ceilings foundations and partitions. Sleeves shall be installed at exact penetration locations and angles to accommodate raceway and conduit routings.

3. Joists, girders, beams, columns or reinforcing steel shall not be cut or weakened. Where construction necessitates the routing of conduit or raceways through structural members, framing or under footings, written permission to make such installation shall first be obtained from the Architect. Such permission will not be granted, however, if any other method of installation is possible.

4. The layout and design of raceways and conduits located in or routed through masonry or reinforced beams or walls shall be reviewed by the Architect before any work is performed. All sleeving shall be accomplished according to the instructions of the Architect and shall be accepted before any concrete is poured.

5. Sleeves, raceways and conduit shall be located to clear steel reinforcing bars in beams. Reinforcing bars in walls shall be offset to clear piping and sleeves.

6. Provide 2" continuous clearance between inside of sleeve and exterior of conduits and raceways passing through the sleeve, unless otherwise specified. Where sleeves pass through outside walls below grade, provide full 1" clearance between exterior of conduits and raceways passing through the sleeve. For seismic joints, clearance shall be 3".

7. Sleeves set in fire walls shall be caulked between sleeve, conduit and raceways passing through the sleeve with fireproof sealant.

8. Sleeve Material:

   a. In floor slab construction: Schedule 40 black steel pipe, with upper surface to be sealed watertight.

   b. In concrete walls: Schedule 40 black steel pipe. When installed in outside walls, seal outer surface watertight.

   c. In lath and plaster partitions and ceiling: 24 gauge galvanized iron or steel.

   d. Sleeves through waterproof membranes: Cast iron or Schedule 40 steel with flashing clamp device and corrosion resistant clamping bolts. Caulk space between pipe and sleeve with outer surface sealed watertight.

3.02 GROUNDING

A. Grounding shall be executed in accordance with all applicable codes and regulations, both of the State of California and local authorities having jurisdiction.

B. Where nonmetallic conduit is used in the underground distribution system, the Contractor shall install the proper sized copper ground wire in the conduit with the feeder for use as an equipment ground. The electrical metallic raceway system shall be grounded to this ground wire.

C. The maximum resistance to ground shall not exceed 5 ohms.

D. Where an equipment bonding ground wire is installed or where nonmetallic or flexible conduit is used for feeder, subfeeder or branch circuit wiring, a green insulated, copper ground wire, sized in accordance with the following table, shall be installed. Install ground wire in each conduit with phase conductors.

Feeder, Subfeeders & Branch Circuit Protection	Minimum Ground Wire Size
15 Amp	#12
20 Amp	#12
30 to 60 Amp	#10
70 to 100 Amp	#8
101 to 200 Amp	#6
201 to 400 Amp	#3
401 to 600 Amp	#1
601 to 800 Amp	1/0
801 to 1000 Amp	2/0

1001 to 1200 Amp	3/0
1201 to 1600 Amp	4/0
1601 to 2000 Amp	250 MCM
2002 to 2500 Amp	350 MCM
2501 to 4000 Amp	500 MCM

E. Where conductors are run in parallel in multiple raceways, the grounding conductor shall be run in parallel. Each parallel equipment grounding conductor shall be sized on the basis of the ampere rating of the over current device protecting the circuit conductors in the raceway. When conductors are adjusted in size to compensate for voltage drop, grounding conductors, where required, shall be adjusted proportionately in size.

F. Ground conductors for branch circuit wiring shall be attached to each outlet to the back of the box using drilled and tapped holes and washer head screws, 6-32 or larger.

G. Each panelboard, switchboard, pull box or any other enclosure in which several ground wires are terminated shall be equipped with a ground bus secured to the interior of the enclosure. The bus shall have a separate lug for each ground conductor. No more than one conductor shall be installed per lug.

3.03 CONDUIT

A. The sizes of the conduits for the various circuits shall be as indicated on the drawings and as required by code for the size and number of conductors to be pulled therein. Conduits to be concealed except as noted otherwise.

B. Rigid steel conduit shall be used in the following areas:

1. Embedded in concrete.
2. Embedded in brick or masonry walls.
3. Exposed on interior of buildings below eight feet.
4. Exposed on exterior of building.
5. Damp or wet locations.

Rigid steel conduit shall not be installed in direct contact with earth or sand.

C. PVC-coated rigid steel conduit shall be used for all elbows and risers, for underground nonmetallic conduits, and for all underground microphone, speaker and dimming control circuit conduits.

D. Electrical metallic tubing up to and including 4 inch may be installed as permitted by codes referenced within specifications.

E. Flexible steel conduit may be used for equipment and transformer connections only.

F. Liquid-tight flexible conduit shall be used for final connection to motors, control devices mounted on vibrating or rotating equipment, equipment indicated on drawings to have flexible conduit connections, and in all areas where exposed flexible connections are required.

G. Nonmetallic conduit shall be used for all underground runs unless specifically noted or specified otherwise. Provide PVC-coated steel conduit for all elbows and risers. Nonmetallic conduit shall not be run in slabs or walls, above ceiling or exposed.

H. Conduit Installation:

1. Conduits shall be supported and braced per OSHPD Anchorage pre-approval No. R-0010 the SMACNA "guidelines for seismic restraints for mechanical systems and plumbing piping systems" or OSHPD Anchorages pre-approval No. R-003 the Superstrut Seismic Restraint System for pipes and conduits only.

2. Securely and rigidly support all conduits from building structure. Provide supports maximum of ten feet on centers and within three feet of all bends, outlets, junction boxes, cabinets, panels and fittings. Conduits shall be supported independent of all piping, duct work, equipment ceiling hanger wires, and suspended ceiling grid systems. All conduits shall be secured by means of approved pipe clamps or straps. The use of "plumbers tape" is prohibited.

3. Individual conduits suspended above ceiling shall be supported by means of hanger rods and pipe clamps. Multiple conduits suspended above ceilings shall be supported by means of trapeze type hangers and pipe clamps.

4. Individual conduits placed against brick, masonry or concrete walls or slabs shall be secured with pipe clamps and expansion shields. Individual conduits placed against dry wall or plaster construction shall be secured by means of pipe clamps and screws attached to studs or other structural members. The use of toggle bolts is prohibited. Provide preformed channel supports for all multiple conduits placed against walls or slabs.

5. Unless otherwise restricted by structural drawings as specifications the maximum size conduit permitted in concrete slabs or walls shall be not be greater than 1/4 of the slab thickness. Conduits installed in concrete slabs shall not cross.

6. Conduit below slab on grade or underground exterior to building shall be spaced a minimum of 3" between identical systems and 12" between power and all other systems except at termination points.

7. Conduits which are installed at this time and left empty for future use shall have polyvinyl rope left in place for future use.

8. Conduits stubbed outside of building line for future use shall be terminated a minimum of five feet clear of building or adjacent concrete walks or A.C. paving and capped and marked. Provide tag engraved with the number and size of conduits and type of service (i.e., "POWER", "TEL.", etc.).

9. Provide expansion and deflection fittings, with bonding jumper at all building expansion or seismic joint crossings.

10. Provide two locknuts and an insulated bushing at each metallic conduit terminating at outlet boxes, junction boxes, terminal cabinets, switchboards and panelboards. Provide insulated bushing at each metallic conduit stub-up location. Bushings shall have ground lugs when installed on a metallic extension of PVC conduit run.

11. Provide metallic or plastic caps on all conduit during construction until installation of conductors.

12. Branch circuit and telephone conduits turned up from floor into interior demountable partitions or to equipment not adjacent to all wall shall terminate in flush coupling at floor and then extend into partition or to equipment. Refer to architectural drawings for location of demountable partitions.

13. Conduit run exposed shall be run at right angles or parallel to the walls or structures. All changes in directions, either horizontally or vertically, shall be made with conduit outlet bodies as manufactured by Crouse Hinds or equal. Conduits run on exposed beams or trellis work shall be painted to match surrounding surfaces. Conduits run exposed on roofs shall be installed on 2x4 redwood sleepers, maximum 5 foot on centers. Sleepers shall be set in nonhardening mastic.

14. Rigid steel conduit or electrical metallic tubing shall not be strapped or fastened to equipment subject to vibration or mounted on shock absorbing bases.

15. From each panel which is flush mounted in a wall, stub up from top of the panel a minimum of four 3/4" conduits to the nearest ceiling spaces or other accessible location and cap for future use.

16. Conduit rising from floor for motor connection independently supported if over 24" above floor. Support shall not be to a motor or duct work which may transmit vibrations.

17. All conduits, except for 120 or 277 volt branch circuits and communication conduits, which are run exterior to building slab shall be concrete encased. If PVC type EB conduit is used it shall be concrete encased the full length of the conduit installation including under building slab.

18. Concrete for encasement of nonmetallic conduits shall be red 200E PSI with a maximum of 3/4" gravel. Provide prefabricated plastic spacers between each conduit. Provide a minimum of 2" of concrete between each conduit and a minimum of 3" of concrete on top, bottom and side of duct bank. Provide a minimum of 12" of concrete power and signal system conduits. Provide ten pounds of red coloring cement for each cubic yard of concrete.

19. Provide all trenching, excavation, shoring and backfilling required for the proper installation of underground conduits. Bottoms of trenches to be cut to grade. Make trenches 12 inches wider than the greatest diameter on the conduit. All conduits exterior to building slab shall be set on a 6 inch bed of damp sand, and backfilled to within 12 inches of finished grade with damp sand. Remainder of backfill to be native soil. Soil shall have no stones or aggregate greater than 3". Do not backfill until installation has been approved and as-built drawings are up to date. Promptly install all conduits after excavation has been done, so as to keep the excavations open as short a time as possible. All excess soil from trenching shall be removed from the site.

20. Install underground conduit, except under buildings, not less than 24" below finished grade in nontraffic areas and 30" below finished grade in traffic areas, including roads and parking areas. Install long radius bends in all underground conduits in excess of 100 feet long.

3.04 WIRE AND CABLE

A. Branch circuit and fixture joints for #10 AWG and smaller wire shall be made with UL-approved connectors listed for 600 volts, approved for use with copper and/or aluminum wire. Connector to consist of cone-shaped, expandable coil spring insert, insulated with a nylon shell and 2 wings placed opposite each other to serve as a built-in wrench or shall be molded one-piece as manufactured by "Scotchlok".

B. Branch circuit joints of #8 AWG and larger shall be made with screw pressure connectors made of high strength structural aluminum alloy and UL-approved for use with both copper and/or aluminum wire as manufactured by Thomas & Betts. Joints shall be insulated with plastic splicing tape, half-lapped and at least the thickness equivalent to the conductor insulation. Tapes shall be fresh and of quality equal to Scotch.

C. Use U.L. listed pulling compound for installation of conductors in conduits.

D. Correspond each circuit to the branch number indicated on the panel schedule shown on the drawings except where departures are approved by the Architect or the Owner's inspectors.

E. All wiring, including low voltage, shall be installed in conduit.

F. Control wiring to conform to the wiring diagrams shown on the mechanical drawings and the manufacturer's wiring diagrams.

G. All splices in exterior pull boxes and light poles shall be cast resin encapsulated.

1. Power conductor splices - 3M Scotchcast Series 82/85/90; Plymouth or equal.

2. Control and signal circuits 3M Scotchcast series 8981 thru 8986, Plymouth or equal.

H. Neatly group and lace all wiring in panelboards, motor control centers and terminal cabinets with plastic ties at 3" on centers. Tag all spare conductors.

END OF SECTION

SECTION 16160
PANELBOARDS

PART 1 - GENERAL

1.01 SUMMARY

A. Section Includes: Lighting and power distribution facilities, including panelboards.

1.02 SUBMITTALS

A. Shop Drawings: Include a front elevation, indicate cabinet dimensions, make, location and capacity of equipment, size of gutters, type of mounting, finish, and catalog number of locks.

1.03 DESIGN REQUIREMENTS

A. Lighting and Appliances Panelboards:

1. Lighting and appliance panelboards shall be wall- mounted, enclosed safety type with 277/480 volt, 4-wire or 120/208 volt, 4-wire solid neutral mains as indicated on Drawings or specified.

2. Single pole branches shall be molded case, thermal magnetic circuit breakers with inverse time delay, trip free, quick-make, quick-break mechanism and silver alloy contacts. Circuit breakers shall be rated as indicated on Drawings, with ampere rating marked on handle and shall indicate "ON - OFF" and tripped positions. Ground fault interrupters shall be incorporated into circuit breakers where indicated. They shall be listed by UL as a ground fault device.

3. Two and 3 pole branches shall be enclosed, and shall be thermal magnetic circuit breakers with inverse time delay, non-tamperable, ambient compensated, single handle, internal common trip, and quick-make, and quick-break mechanism with silver alloy contacts. Circuit breakers shall be rated as indicated on the Drawings.

4. Main and subfeeder circuit breakers shall be enclosed, thermal magnetic type with inverse time delay, single handle common trip, quick-make, quick- break mechanism, corrosion resistant bearings and silver alloy contacts. Ampere frame size and trip rating shall be as indicated on Drawings. Breakers over 225 amperes shall have interchangeable trip units. Handles of main and subfeeder circuit breakers shall be under cabinet door. Voltage rating shall be as indicated on Drawings.

5. All circuit breakers shall be one-piece, bolt-on type and shall meet short circuit interrupting capacity requirements indicated on Drawings, including series rating.

6. Breakers shall have a minimum short circuit interrupting rating of 10,000 symmetrical for panels board voltage 240 volts and 14,000 symmetrical thru 600 volts or as specified on drawings. Interrupting rating shall not be less than what is indicated on drawings.

7. All internal connections indicated of outdoor panelboards shall be made with plated copper bus bars and the busses shall extend for full length of space available for branch circuit breakers. All internal connections shall be made with plated aluminum bus bars for indoor panelboards. Feeder cable connectors shall be installed at point of feeder entrance. All terminals shall have copper conductors.

Panelboards fed by conductors having overcurrent protection greater than 200 amperes shall be protected on supply side by overcurrent devices having a rating not greater than that of panelboard.

8. Except where otherwise indicated, circuit breakers shall be in 2 vertical rows connected to bus bars in a distributed phase arrangement. Two pole branches shall be balanced on busses. Each single pole branch shall be numbered adjacent to its circuit breaker with odd numbers on left and even numbers on right.

9. All specified circuit breaker spaces shall include necessary hardware required for future installation of circuit breakers.

10. Provide locking devices for each individual circuit breaker. Padlocking device shall be secured to circuit breaker and by panel deadfront plate.

B. Panelboard Cabinets:

1. Panelboard cabinets shall be code gage galvanized steel or blue steel; fronts, doors, and trims shall be code gauge furniture steel. Cabinets shall have at least 6" high gutters at top and bottom where feeder cable size exceeds #4 or where feeder cable passes through cabinet vertically. Cabinets shall have top and bottom gutters sized as required by inspection department having jurisdiction, but never less than 6" where more than one feeder enters top or bottom of cabinets. Side gutters shall not be less than 4" wide. Width of cabinets shall be 20", unless indicated different on Drawings.

2. Where contactors, time switches, and control devices are specified or indicated to be installed within panelboard cabinets, a separate compartment and door shall be provided at top of cabinet for such devices. Door shall be sized as required to permit removal of contactor and other devices intact. Gutters shall be provided at sides and top of compartment.

C. Panelboard Schedule: Contractor shall prepare a neatly typewritten schedule with number or name of room or area, or load served by each panelboard circuit. Room numbers or names used shall be determined at site and shall not necessarily be those used on Drawings. Schedule shall also indicate panel designation, voltage and phase, building and distribution panel or switchboard from which it is fed. Schedule shall be mounted in a frame under transparent plastic 1/32" thick on inside of each panelboard cabinet door.

D. Panelboard Standards: All panelboards shall meet latest revisions of following standards:

1. National Electric Code, Article 384.
2. UL 67, Panelboards.
3. UL 50, Cabinets and Boxes.
4. UL 943, GFCI.
5. UL 489, Molded case circuit breakers.
6. NEMA PBI.
7. Federal Specifications W-P-115 and WC-375B.
8. Panelboards must be UL labeled.

PART 2 - PRODUCTS

2.01 EQUIPMENT

A. Panelboards shall be manufactured by RSE Sierra, Square D, General Electric, or approved equal.

PART 3 - EXECUTION

3.01 INSTALLATION

A. Fronts shall be flush or surface type, as required. Fronts shall be fastened to cabinets with 1/4" #20, nickel-plated oval-headed machine screws and cup washers. Sufficient screws shall be installed to prevent buckling or warping of cabinet front. Flush type fronts shall be aligned plumb and square and cabinet shall be drilled and tapped, at site, for cover screws, to accomplish this if necessary.

B. All surfaces of flush mounted cabinets shall be galvanized. Fronts shall be given 2 coats of metal primer and shall not be installed on cabinets until after finish coats of paint have been applied to wall and cabinet fronts and are thoroughly dry. Screws and cup washers shall not be painted.

C. All surfaces of surface mounted cabinets and fronts shall be given one coat of metal primer and a finish coat of baked-on gray enamel.

D. Cabinets shall be rigidly supported in place, independent of conduits.

E. All equipment exposed to the weather shall be provided with NEMA 3R enclosures whether or not shown on the drawings. Equipment located in rooms, building cavities or closets without doors or protection from the weather shall be provided with NEMA 3R enclosures.

END OF SECTION

PART 1 - GENERAL

1.01 GENERAL

A. Provide light fixtures complete including lamps, ballasts, sockets, housing, brackets, diffusers/ lenses and outlet boxes.

B. The catalog numbers included in the description of the various types of lighting fixtures shall be basically considered to establish the type or class of the fixture with a particular manufacturer only. The fixture length, number of lamps, component materials, accessories, mounting type and all other features required to fulfill the total description of the fixture based on all drawing and specification information shall be complied with regardless of whether or not the catalog number specifically includes these features. If any conflict exists between the catalog number and the description, the Contractor shall either resolve the conflict with the Architect prior to submittal of his bid or furnish the fixture to meet the intent as later interpreted by the Architect without change in contract price.

C. Lighting fixtures shall be of types as indicated in fixture schedule on drawings.

D. All fixtures of one type shall be of one manufacturer and of identical finish and appearance, unless indicated otherwise on drawings.

1.02 SCOPE

A. Work Included: All labor, materials, appliances, tools, equipment necessary for and incidental to performing all operations in connection with furnishing, delivery and installation of the work of this Section, complete, as shown on the drawings and/or specified herein. Work includes, but is not necessarily limited to the following:

1. Examine all other specification sections and drawings for related work required to be included as work under Division Sixteen.

2. General provisions and requirements for electrical work.

1.03 SUBMITTALS

A. If requested by the architect, provide a sample of any fixture proposed as a substitution for a specified fixture. Sample fixture shall be complete with lamps, cord and plug for 120 volt operation. Fixture shall be delivered to the Engineer's office for review and shall be picked up within ten (10) working days after review comments have been received; any samples left over this time will be discarded by the Engineer. Decision of Engineer regarding acceptability of any fixture is final.

B. Provide complete manufacturers catalog data information for each light fixture, ballast and lamp.

PART 2 - PRODUCTS

2.01 LIGHT FIXTURES

A. Lighting fixtures shall have all parts and fittings necessary to complete and properly install the fixture. All fixtures shall be equipped with lamps of size and type specified.

B. Surface and/or wall mounted lighting fixtures shall not have any exposed chase nipples or conduit knockouts visible to view within fixture housing. Lighting fixtures mounted in continuous rows shall have chase nipples or conduit knockouts between lighting fixture housing, but shall not have visible chase nipples/conduit knockouts on the visible ends of the continuous row of lighting fixtures.

C. Where fixture color is indicated to be selected by the Architect, provide two color chip samples for review.

D. Recessed fixtures must all have Underwriters' Laboratory approval for recessed installation with plaster frame and attached pull box. Lamp enclosure, reflectors and finish wiring shall not be installed until plastering is completed. Finish trim shall not be installed until finish painting of the adjacent surface is completed.

E. The fixture to bear Underwriters Laboratories' label of approval for the wattage indicated.

F. Light fixtures installed outdoors in damp or wet locations shall be U.L. labeled for said location.

2.02 LENS AND DIFFUSERS

A. Diffusers shall be formed from cast sheet having a minimum unpenetrated thickness of 0.125" and, in any event, shall be of sufficient thickness and or proper construction and camber to prevent the diffusers from having any noticeable sag over the entire normal life of the installation.

B. Acrylic lenses shall be manufactured from 100% acrylic as manufactured by Rohm & Hass, called Plexiglas V, V Type 920, VM, or an approved equal by either injection molding or by extraction.

PART 3 - EXECUTION

3.01 LIGHT FIXTURE MOUNTING HARDWARE

A. It is the Contractor's responsibility to verify actual ceiling construction type as defined on the architectural drawings and furnish all lighting fixtures with the correct mounting devices and proper operating voltage whether or not such variations are indicated by fixture catalog number. The Contractor shall verify depth of all recessed lighting fixtures with architectural drawings prior to ordering fixtures. Any discrepancies that would cause recessed lighting fixtures not to fit into ceiling shall be reported to the Architect prior to ordering of the fixtures.

B. Recessed fluorescent fixture mounted flush in "lay-in" T-bar or concealed spine ceilings shall be provided with two clips on each end of the fixture and connected to the ceiling cross runners. Provide two 12-gauge fixture hanger wires attached to structural members and connect to diagonal corners of the fixture. Fixture shall set level and flush with ceiling grid system.

C. Fluorescent fixtures surface mounted to a suspended "tee" ceiling shall be installed with a one and one-half inch steel channel or angle which spans across and above the main runners. The channel or angle member shall be provided with threaded studs for attaching to the fixture housing through the lay-in tile. Two members shall be installed per four foot fixture. Two 12-gauge hanger wires shall be provided per member, attached 6" from each end of the member and anchored to the structure above.

D. Pendant mounting fixtures shall be supplied with swivel hangers. Fixture shall swing in any direction a minimum of 45 degrees of gravity, position. Fixtures shall have special stem lengths to give the mounting height indicated on the drawings. Stem to be 1-piece

without coupling, and to be finished the same color as the canopy and the fixture, unless otherwise noted. The Contractor shall check all lock-nuts and set screws to rigidly secure the socket to the stem, and the stem to the outlet box. Fixtures to be plumb and vertical. Where obstructions occur restricting 45 degrees swing of fixtures, the fixtures shall be guy wired to prevent fixtures from striking obstructions. Method of guying shall be approved by the Architect and Electrical Engineer. Swinging fixtures shall have a safety cable attached to the structure and the fixture at each support capable of supporting four times the vertical load.

E. Suspended fixtures weighing in excess of 50 pounds shall be supported independently of the fixture outlet box. Provide "air craft" hanger cable for suspended fixtures route cable concealed or in pendant where possible. Each cable shall support four times the weight of the fixture. Securely attach the cable to the building structure.

F. On acoustical tile ceilings, fixture outlets shall be accurately located in the center, at the intersection of the four corners or at the center of the joints of two tiles.

G. Surface mounted fixtures installed on drywall or plaster ceilings and weighing less than 50 pounds may be supported from outlet box. Provide structural supports above drywall or plaster ceilings for installation of fixtures weighing more than 50 pounds and secure fixture to structural supports. The use of toggle bolts is prohibited.

H. The electrical Contractor shall aim the exterior adjustable lighting fixtures after dark in the presence of, and at a time convenient to the Architect.

3.02 LENS AND DIFFUSERS

A. Lens and diffusers shall be completely cleaned of all dust, dirt and fingerprints after the installation of the light fixtures, lamps, and prior to occupancy of the Owner.

3.03 BALLASTS AND DRIVERS

A. Ballasts and drivers remote from the lighting fixture, mounted as shown on the drawings and designed for remote operation. Additional wiring and conduit shall be provided whether shown on the drawing or not, between lighting fixture and remote ballasts with required quantity of "THHN" wire to operate said fixture(s).

B. Provide proper type and quantity of conductors with conduit system for proper operation of dimming system, whether or not shown on drawings.

END OF SECTION

SECTION 221116 - DOMESTIC WATER PIPING

PART 1 - GENERAL

1.1 RELATED DOCUMENTS

A. Drawings and general provisions of the Contract, including General and Supplementary Conditions and Division 01 Specification Sections, apply to this Section.

1.2 SUMMARY

A. Section Includes:

1. Under-building-slab and aboveground domestic water pipes, tubes, and fittings inside building.

1.3 INFORMATIONAL SUBMITTALS

A. System purging and disinfecting activities report.

B. Field quality-control reports.

PART 2 - PRODUCTS

2.1 PIPING MATERIALS

A. Comply with requirements in "Piping Schedule" Article for applications of pipe, tube, fitting materials, and joining methods for specific services, service locations, and pipe sizes.

B. Potable-water piping and components shall comply with NSF 14 and NSF 61 Annex G.

2.2 COPPER TUBE AND FITTINGS

A. Hard Copper Tube: ASTM B 88, Type L water tube, drawn temper.

B. Soft Copper Tube: ASTM B 88, Type K water tube, annealed temper.

C. Cast-Copper, Solder-Joint Fittings: ASME B16.18, pressure fittings.

D. Wrought-Copper, Solder-Joint Fittings: ASME B16.22, wrought-copper pressure fittings.

E. Bronze Flanges: ASME B16.24, Class 150, with solder-joint ends.

F. Copper Unions:

1. MSS SP-123.
2. Cast-copper-alloy, hexagonal-stock body.
3. Ball-and-socket, metal-to-metal seating surfaces.
4. Solder-joint or threaded ends.

PART 3 - EXECUTION

3.1 EARTHWORK

A. Comply with requirements in Section 312000 "Earth Moving" for excavating, trenching, and backfilling.

3.2 PIPING INSTALLATION

A. Drawing plans, schematics, and diagrams indicate general location and arrangement of domestic water piping. Indicated locations and arrangements are used to size pipe and calculate friction loss, expansion, and other design considerations. Install piping as indicated unless deviations to layout are approved on coordination drawings.

B. Install copper tubing under building slab according to CDA's "Copper Tube Handbook."

C. Install domestic water piping level and plumb.

D. Install piping concealed from view and protected from physical contact by building occupants unless otherwise indicated and except in equipment rooms and service areas.

E. Install piping indicated to be exposed and piping in equipment rooms and service areas at right angles or parallel to building walls. Diagonal runs are prohibited unless specifically indicated otherwise.

F. Install piping above accessible ceilings to allow sufficient space for ceiling panel removal, and coordinate with other services occupying that space.

G. Install piping to permit valve servicing.

H. Install nipples, unions, special fittings, and valves with pressure ratings the same as or higher than the system pressure rating used in applications below unless otherwise indicated.

I. Install piping free of sags and bends.

J. Install fittings for changes in direction and branch connections.

K. Install unions in copper tubing at final connection to each piece of equipment, machine, and specialty.

L. Install escutcheons for piping penetrations of walls, ceilings, and floors.

3.3 JOINT CONSTRUCTION

A. Ream ends of pipes and tubes and remove burrs. Bevel plain ends of steel pipe.

B. Remove scale, slag, dirt, and debris from inside and outside of pipes, tubes, and fittings before assembly.

C. Soldered Joints for Copper Tubing: Apply ASTM B 813, water-flushable flux to end of tube. Join copper tube and fittings according to ASTM B 828 or CDA's "Copper Tube Handbook."

3.4 CONNECTIONS

A. Drawings indicate general arrangement of piping, fittings, and specialties.

B. When installing piping adjacent to equipment and machines, allow space for service and maintenance.

C. Connect domestic water piping to exterior water-service piping. Use transition fitting to join dissimilar piping materials.

D. Connect domestic water piping to water-service piping with shutoff valve; extend and connect to the following:

1. Domestic Water Booster Pumps: Cold-water suction and discharge piping.
2. Water Heaters: Cold-water inlet and hot-water outlet piping in sizes indicated, but not smaller than sizes of water heater connections.
3. Plumbing Fixtures: Cold- and hot-water-supply piping in sizes indicated, but not smaller than that required by plumbing code.
4. Equipment: Cold- and hot-water-supply piping as indicated, but not smaller than equipment connections. Provide shutoff valve and union for each connection. Use flanges instead of unions for NPS 2-1/2 and larger.

3.5 FIELD QUALITY CONTROL

A. Perform the following tests and inspections:

1. Piping Inspections:

a. Do not enclose, cover, or put piping into operation until it has been inspected and approved by authorities having jurisdiction.
b. During installation, notify authorities having jurisdiction at least one day before inspection must be made. Perform tests specified below in presence of authorities having jurisdiction:

    1) Roughing-in Inspection: Arrange for inspection of piping before concealing or closing in after roughing in and before setting fixtures.
    2) Final Inspection: Arrange for authorities having jurisdiction to observe tests specified in "Piping Tests" Subparagraph below and to ensure compliance with requirements.

c. Reinspection: If authorities having jurisdiction find that piping will not pass tests or inspections, make required corrections and arrange for reinspection.
d. Reports: Prepare inspection reports and have them signed by authorities having jurisdiction.

2. Piping Tests:

a. Fill domestic water piping. Check components to determine that they are not air bound and that piping is full of water.
b. Test for leaks and defects in new piping and parts of existing piping that have been altered, extended, or repaired. If testing is performed in segments, submit a separate report for each test, complete with diagram of portion of piping tested.
c. Leave new, altered, extended, or replaced domestic water piping uncovered and unconcealed until it has been tested and approved. Expose work that was covered or concealed before it was tested.
d. Cap and subject piping to static water pressure of 50 psig above operating pressure, without exceeding pressure rating of piping system materials. Isolate test source and allow it to stand for four hours. Leaks and loss in test pressure constitute defects that must be repaired.
e. Repair leaks and defects with new materials, and retest piping or portion thereof until satisfactory results are obtained.
f. Prepare reports for tests and for corrective action required.

B. Domestic water piping will be considered defective if it does not pass tests and inspections.

C. Prepare test and inspection reports.

3.6 ADJUSTING

A. Perform the following adjustments before operation:

1. Close drain valves, hydrants, and hose bibbs.

2. Open shutoff valves to fully open position.
3. Open throttling valves to proper setting.

4. Remove plugs used during testing of piping and for temporary sealing of piping during installation.
5. Check plumbing specialties and verify proper settings, adjustments, and operation.

3.7 CLEANING

A. Clean and disinfect potable domestic water piping as follows:

1. Purge new piping and parts of existing piping that have been altered, extended, or repaired before using.
2. Use purging and disinfecting procedures prescribed by authorities having jurisdiction; if methods are not prescribed, use procedures described in either AWWA C651 or AWWA C652 or follow procedures described below:

a. Flush piping system with clean, potable water until dirty water does not appear at outlets.
b. Fill and isolate system according to either of the following:

1) Fill system or part thereof with water/chlorine solution with at least 50 ppm of chlorine. Isolate with valves and allow to stand for 24 hours.
2) Fill system or part thereof with water/chlorine solution with at least 200 ppm of chlorine. Isolate and allow to stand for three hours.

c. Flush system with clean, potable water until no chlorine is in water coming from system after the standing time.
d. Repeat procedures if biological examination shows contamination.
e. Submit water samples in sterile bottles to authorities having jurisdiction.

B. Prepare and submit reports of purging and disinfecting activities. Include copies of water-sample approvals from authorities having jurisdiction.

C. Clean interior of domestic water piping system. Remove dirt and debris as work progresses.

3.8 PIPING SCHEDULE

A. Transition and special fittings with pressure ratings at least equal to piping rating may be used in applications below unless otherwise indicated.

B. Under-building-slab, domestic water, shall be the following:

1. Soft copper tube, ASTM B 88, Type K; wrought-copper, solder-joint fittings; and brazed joints.

C. Aboveground domestic water piping, shall be the following:
   1. Hard copper tube,ASTM B 88, Type L; wrought-copper, solder-joint fittings; and soldered joints.

3.9 VALVE SCHEDULE

A. Drawings indicate valve types to be used. Where specific valve types are not indicated, the following requirements apply:

   1. Shutoff Duty: Use ball o valves for piping NPS 2 and smaller.
   2. Drain Duty: Hose-end drain valves.

END OF SECTION 221116

SECTION 221316 - SANITARY WASTE AND VENT PIPING

PART 1 - GENERAL

1.1 RELATED DOCUMENTS

A. Drawings and general provisions of the Contract, including General and Supplementary Conditions and Division 01 Specification Sections, apply to this Section.

1.2 SUMMARY

A. Section Includes:

1. Pipe, tube, and fittings.
2. Specialty pipe fittings.

1.3 PERFORMANCE REQUIREMENTS

A. Components and installation shall be capable of withstanding the following minimum working pressure unless otherwise indicated:

1. Soil, Waste, and Vent Piping: 10-foot head of water.

1.4 ACTION SUBMITTALS

A. Product Data: For each type of product indicated.

1.5 QUALITY ASSURANCE

A. Piping materials shall bear label, stamp, or other markings of specified testing agency.

B. Comply with NSF/ANSI 14, "Plastics Piping Systems Components and Related Materials," for plastic piping components. Include marking with "NSF-dwv" for plastic drain, waste, and vent piping and "NSF-sewer" for plastic sewer piping.

PART 2 - PRODUCTS

2.1 PIPING MATERIALS

A. Comply with requirements in "Piping Schedule" Article for applications of pipe, tube, fitting materials, and joining methods for specific services, service locations, and pipe sizes.

2.2 ABS PIPE AND FITTINGS

A. Solid-Wall ABS Pipe: ASTM D 2661, Schedule 40.

B. ABS Socket Fittings: ASTM D 2661, made to ASTM D 3311, drain, waste, and vent patterns.

C. Solvent Cement: ASTM D 2235.

PART 3 - EXECUTION

3.1 EARTH MOVING

A. Comply with requirements for excavating, trenching, and backfilling specified in Section "Earth Moving."

3.2 PIPING INSTALLATION

A. Drawing plans, schematics, and diagrams indicate general location and arrangement of piping systems. Indicated locations and arrangements were used to size pipe and calculate friction loss, expansion, pump sizing, and other design considerations. Install piping as indicated unless deviations to layout are approved on coordination drawings.

B. Install piping in concealed locations unless otherwise indicated and except in equipment rooms and service areas.

C. Install piping indicated to be exposed and piping in equipment rooms and service areas at right angles or parallel to building walls. Diagonal runs are prohibited unless specifically indicated otherwise.

D. Install piping above accessible ceilings to allow sufficient space for ceiling panel removal.

E. Install piping to permit valve servicing.

F. Install piping at indicated slopes.

G. Install piping free of sags and bends.

H. Install fittings for changes in direction and branch connections.

I. Make changes in direction for soil and waste drainage and vent piping using appropriate branches, bends, and long-sweep bends. Sanitary tees and short-sweep 1/4 bends may be used on vertical stacks if change in direction of flow is from horizontal to vertical. Use long-turn, double Y-branch and 1/8-bend fittings if two fixtures are installed back to back or side by side with common drain pipe. Straight tees, elbows, and crosses may be used on vent lines. Do not change direction of flow more than 90 degrees. Use proper size of

J. standard increasers and reducers if pipes of different sizes are connected. Reducing size of drainage piping in direction of flow is prohibited.

K. Lay buried building drainage piping beginning at low point of each system. Install true to grades and alignment indicated, with unbroken continuity of invert. Place hub ends of piping upstream. Install required gaskets according to manufacturer's written instructions for use of lubricants, cements, and other installation requirements. Maintain swab in piping and pull past each joint as completed.

L. Install soil and waste drainage and vent piping at the following minimum slopes unless otherwise indicated:

1. Building Sanitary Drain: 2 percent downward in direction of flow for piping NPS 3 and smaller; 2 percent downward in direction of flow for piping NPS 4 and larger.
2. Horizontal Sanitary Drainage Piping: 2 percent downward in direction of flow.

M. Install aboveground ABS piping according to ASTM D 2661.

N. Install underground ABS piping according to ASTM D 2321.

O. Plumbing Specialties:
1. Install cleanouts at grade and extend to where building sanitary drains connect to building sanitary sewers in sanitary drainage gravity-flow piping. Install cleanout fitting with closure plug inside the building in sanitary drainage force-main piping.

P. Do not enclose, cover, or put piping into operation until it is inspected and approved by authorities having jurisdiction.

Q. Install escutcheons for piping penetrations of walls, ceilings, and floors.

3.3 JOINT CONSTRUCTION

A. Plastic, Nonpressure-Piping, Solvent-Cement Joints: Clean and dry joining surfaces. Join pipe and fittings according to the following:

1. Comply with ASTM F 402 for safe-handling practice of cleaners, primers, and solvent cements.
2. ABS Piping: Join according to ASTM D 2235 and ASTM D 2661 Appendixes.

3.4 HANGER AND SUPPORT INSTALLATION

A. Support piping and tubing as per CPC.

3.5 CONNECTIONS

A. Drawings indicate general arrangement of piping, fittings, and specialties.

B. Connect soil and waste piping to exterior sanitary sewerage piping. Use transition fitting to join dissimilar piping materials.

C. Connect drainage and vent piping to the following:

1. Plumbing Fixtures: Connect drainage piping in sizes indicated, but not smaller than required by plumbing code.
2. Plumbing Fixtures and Equipment: Connect atmospheric vent piping in sizes indicated, but not smaller than required by authorities having jurisdiction.
3. Plumbing Specialties: Connect drainage and vent piping in sizes indicated, but not smaller than required by plumbing code.
4. Install test tees (wall cleanouts) in conductors near floor and floor cleanouts with cover flush with floor.

D. Where installing piping adjacent to equipment, allow space for service and maintenance of equipment.

3.6 FIELD QUALITY CONTROL

A. During installation, notify authorities having jurisdiction at least 24 hours before inspection must be made. Perform tests specified below in presence of authorities having jurisdiction.

1. Roughing-in Inspection: Arrange for inspection of piping before concealing or closing-in after roughing-in and before setting fixtures.
2. Final Inspection: Arrange for final inspection by authorities having jurisdiction to observe tests specified below and to ensure compliance with requirements.

B. Reinspection: If authorities having jurisdiction find that piping will not pass test or inspection, make required corrections and arrange for reinspection.

C. Reports: Prepare inspection reports and have them signed by authorities having jurisdiction.

D. Test sanitary drainage and vent piping according to procedures of authorities having jurisdiction or, in absence of published procedures, as follows:

1. Test for leaks and defects in new piping and parts of existing piping that have been altered, extended, or repaired. If testing is performed in segments, submit separate report for each test, complete with diagram of portion of piping tested.
2. Leave uncovered and unconcealed new, altered, extended, or replaced drainage and vent piping until it has been tested and approved. Expose work that was covered or concealed before it was tested.
3. Roughing-in Plumbing Test Procedure: Test drainage and vent piping except outside leaders on completion of roughing-in. Close openings in piping system and

4. fill with water to point of overflow, but not less than 10-foot head of water. From 15 minutes before inspection starts to completion of inspection, water level must not drop. Inspect joints for leaks.
5. Repair leaks and defects with new materials and retest piping, or portion thereof, until satisfactory results are obtained.
6. Prepare reports for tests and required corrective action.

3.7 CLEANING AND PROTECTION

A. Clean interior of piping. Remove dirt and debris as work progresses.

B. Protect drains during remainder of construction period to avoid clogging with dirt and debris and to prevent damage from traffic and construction work.

C. Place plugs in ends of uncompleted piping at end of day and when work stops.

D. Exposed ABS Piping: Protect plumbing vents exposed to sunlight with two coats of water-based latex paint.

3.8 PIPING SCHEDULE

A. Aboveground, soil and waste piping shall be the following:
   1. ABS pipe, ABS socket fittings, and solvent-cemented joints.

B. Aboveground, vent piping shall be the following:

   1. ABS pipe, ABS socket fittings, and solvent-cemented joints.

C. Underground, soil, waste, and vent piping shall be the following:
   1. ABS pipe, ABS socket fittings, and solvent-cemented joints.

END OF SECTION 221316

SECTION 233423 - HVAC POWER VENTILATORS

PART 1 - GENERAL

1.1 RELATED DOCUMENTS

A. Drawings and general provisions of the Contract, including General and Supplementary Conditions and Division 01 Specification Sections, apply to this Section.

1.2 SUMMARY

A. Section Includes:
   1. Ceiling-mounted ventilators.

1.3 ACTION SUBMITTALS

A. Product Data: For each type of product indicated. Include rated capacities, operating characteristics, and furnished specialties and accessories. Also include the following:

   1. Certified fan performance curves with system operating conditions indicated.
   2. Certified fan sound-power ratings.
   3. Motor ratings and electrical characteristics, plus motor and electrical accessories.

1.4 CLOSEOUT SUBMITTALS

A. Operation and Maintenance Data: For power ventilators to include in emergency, operation, and maintenance manuals.

1.5 QUALITY ASSURANCE

A. Electrical Components, Devices, and Accessories: Listed and labeled as defined in NFPA 70, by a qualified testing agency, and marked for intended location and application.

B. AMCA Compliance: Fans shall have AMCA-Certified performance ratings and shall bear the AMCA-Certified Ratings Seal.

C. UL Standards: Power ventilators shall comply with UL 705.

1.6 COORDINATION

A. Coordinate sizes and locations of roof curbs, equipment supports, and roof penetrations with actual equipment provided.

PART 2 - PRODUCTS

2.1 CEILING-MOUNTED VENTILATORS

A. Manufacturers: as scheduled on the drawings.

B. Housing: Steel, lined with acoustical insulation.

C. Fan Wheel: Centrifugal wheels directly mounted on motor shaft. Fan shrouds, motor, and fan wheel shall be removable for service.

D. Grille: Plastic, louvered grille.

E. Electrical Requirements: Junction box for electrical connection on housing and receptacle for motor plug-in.

F. Accessories: as scheduled on the drawings.

G. Capacities and Characteristics: as scheduled on the drawings.

PART 3 - EXECUTION

3.1 INSTALLATION

A. Install power ventilators level and plumb.

B. Ceiling Units: Suspend units from structure; use steel wire or metal straps.

3.2 CONNECTIONS

A. Drawings indicate general arrangement of ducts and duct accessories.

3.3 FIELD QUALITY CONTROL

A. Perform tests and inspections.

B. Tests and Inspections:

1. Verify that shipping, blocking, and bracing are removed.

2. Verify that unit is secure on mountings and supporting devices and that connections to ducts and electrical components are complete. Verify that proper thermal-overload protection is installed in motors, starters, and disconnect switches.
3. Verify that cleaning and adjusting are complete.

END OF SECTION 233423

SECTION 238126 – DUCTLESS SPLIT-SYSTEM AIR-CONDITIONERS

PART 1 - GENERAL

1.1 RELATED DOCUMENTS

A. Drawings and general provisions of the Contract, including General and Supplementary Conditions and Division 01 Specification Sections, apply to this Section.

1.2 SUMMARY

A. Section includes ductless split-system air-conditioning and heat-pump units consisting of separate evaporator-fan and compressor-condenser components.

1.3 ACTION SUBMITTALS

A. Product Data: For each type of product indicated. Include rated capacities, operating characteristics, and furnished specialties and accessories. Include performance data in terms of capacities, outlet velocities, static pressures, sound power characteristics, motor requirements, and electrical characteristics.

1.4 CLOSEOUT SUBMITTALS

A. Operation and Maintenance Data: For split-system air-conditioning units to include in emergency, operation, and maintenance manuals.

1.5 MAINTENANCE MATERIAL SUBMITTALS

A. Furnish extra materials that match products installed and that are packaged with protective covering for storage and identified with labels describing contents.

1. Filters: one set for each unit.

1.6 QUALITY ASSURANCE

A. Electrical Components, Devices, and Accessories: Listed and labeled as defined in NFPA 70, by a qualified testing agency, and marked for intended location and application.

B. ASHRAE/IESNA Compliance: Applicable requirements in ASHRAE/IESNA 90.1.

1.7 COORDINATION

A. Coordinate sizes and locations of roof curbs, equipment supports, and roof penetrations with actual equipment provided.

1.8 WARRANTY

A. Special Warranty: Manufacturer's standard form in which manufacturer agrees to repair or replace components of split-system air-conditioning units that fail in materials or workmanship within specified warranty period.

1. Warranty Period:

a. For Compressor: One year from date of Substantial Completion.
b. For Parts: One year from date of Substantial Completion.
c. For Labor: One year from date of Substantial Completion.

PART 2 - PRODUCTS

2.1 MANUFACTURERS

A. As scheduled on the drawings.

2.2 INDOOR UNITS – FAN COILS

A. As scheduled on the drawings.

2.3 OUTDOOR UNITS – HEAT PUMPS AND CONDENSING UNITS

A. As scheduled on the drawings.

EXECUTION

2.4 INSTALLATION

A. Install units level and plumb.

B. Install indoor units using manufacturer's standard mounting devices securely fastened to building structure.

C. Install outdoor units on 4” high concrete pads.

D. Install and connect refrigerant linesets to component's fittings. Install tubing to allow access to unit.

2.5 FIELD QUALITY CONTROL

A. Tests and Inspections:

1. Leak Test: After installation, charge system and test for leaks. Repair leaks and retest until no leaks exist.
2. Operational Test: After electrical circuitry has been energized, start units to confirm proper motor rotation and unit operation.
3. Test and adjust controls and safeties. Replace damaged and malfunctioning controls and equipment.

B. Remove and replace malfunctioning units and retest as specified above.

C. Prepare test and inspection reports.

2.6 STARTUP SERVICE

A. Perform startup service.

1. Complete installation and startup checks according to manufacturer's written instructions.

2.7 DEMONSTRATION

A. Train Owner's maintenance personnel to adjust, operate, and maintain units.

END OF SECTION 238126

SECTION 260519 - LOW-VOLTAGE ELECTRICAL POWER CONDUCTORS AND CABLES

PART 1 - GENERAL

1.1 RELATED DOCUMENTS

A. Drawings and general provisions of the Contract, including General and Supplementary Conditions and Division 01 Specification Sections, apply to this Section.

1.2 SUMMARY

A. Section Includes:

1. Building wires and cables rated 600 V and less.
2. Connectors, splices, and terminations rated 600 V and less.

1.3 ACTION SUBMITTALS

A. Product Data: For each type of product.

1.4 INFORMATIONAL SUBMITTALS

A. Qualification Data: For testing agency.

B. Field quality-control reports.

1.5 QUALITY ASSURANCE

A. Testing Agency Qualifications: Member company of NETA or an NRTL.

1. Testing Agency's Field Supervisor: Certified by NETA to supervise on-site testing.

PART 2 - PRODUCTS

2.1 CONDUCTORS AND CABLES

A. Manufacturers: Southwire, Belden, Cerro, General Cable.

B. Copper Conductors: Comply with NEMA WC 70/ICEA S-95-658.

C. Conductor Insulation: Comply with NEMA WC 70/ICEA S-95-658 for Type THHN/THWN-2.

D. Multiconductor Cable: Comply with NEMA WC 70/ICEA S-95-658 for armored cable, Type AC, metal-clad cable, Type MC.

1. Comply with UL 1277, UL 1685, and NFPA 70 for Type TC-ER cable.

2.2 CONNECTORS AND SPLICES

A. <Double click here to find, evaluate, and insert list of manufacturers and products.>

B. Description: Factory-fabricated connectors and splices of size, ampacity rating, material, type, and class for application and service indicated.

2.3 SYSTEM DESCRIPTION

A. Electrical Components, Devices, and Accessories: Listed and labeled as defined in NFPA 70, by a qualified testing agency, and marked for intended location and application.

B. Comply with NFPA 70.

PART 3 - EXECUTION

3.1 CONDUCTOR MATERIAL APPLICATIONS

A. Feeders: Copper. Solid for No. 10 AWG and smaller; stranded for No. 8 AWG and larger.

B. Branch Circuits: Copper. Solid for No. 12 AWG and smaller; stranded for No. 10 AWG and larger.

3.2 CONDUCTOR INSULATION AND MULTICONDUCTOR CABLE APPLICATIONS AND WIRING METHODS

A. Exposed Feeders: Type THHN/THWN-2, single conductors in raceway.

B. Feeders Concealed in Ceilings, Walls, Partitions, and Crawlspaces: Type THHN/THWN-2, single conductors in raceway.

C. Feeders Concealed in Concrete, below Slabs-on-Grade, and Underground: Type THHN/THWN-2, single conductors in raceway.

D. Exposed Branch Circuits, Including in Crawlspaces: Type THHN/THWN-2, single conductors in raceway.

E. Branch Circuits Concealed in Ceilings, Walls, and Partitions: Type THHN/THWN-2, single conductors in raceway, Armored cable, Type AC, Metal-clad cable, Type MC

F. Branch Circuits Concealed in Concrete, below Slabs-on-Grade, and Underground: Type THHN/THWN-2, single conductors in raceway.

3.3 INSTALLATION OF CONDUCTORS AND CABLES

A. Conceal cables in finished walls, ceilings, and floors unless otherwise indicated.

B. Complete raceway installation between conductor and cable termination points according to Section 260533 "Raceways and Boxes for Electrical Systems" prior to pulling conductors and cables.

C. Use manufacturer-approved pulling compound or lubricant where necessary; compound used must not deteriorate conductor or insulation. Do not exceed manufacturer's recommended maximum pulling tensions and sidewall pressure values.

D. Use pulling means, including fish tape, cable, rope, and basket-weave wire/cable grips, that will not damage cables or raceway.

E. Install exposed cables parallel and perpendicular to surfaces of exposed structural members, and follow surface contours where possible.

F. Support cables according to Section 260529 "Hangers and Supports for Electrical Systems."

3.4 CONNECTIONS

A. Tighten electrical connectors and terminals according to manufacturer's published torque-tightening values. If manufacturer's torque values are not indicated, use those specified in UL 486A-486B.

B. Make splices, terminations, and taps that are compatible with conductor material and that possess equivalent or better mechanical strength and insulation ratings than unspliced conductors.

C. Wiring at Outlets: Install conductor at each outlet, with at least 6 inches of slack.

3.5 IDENTIFICATION

A. Identify and color-code conductors and cables according to Section 260553 "Identification for Electrical Systems."

B. Identify each spare conductor at each end with identity number and location of other end of conductor, and identify as spare conductor.

3.6 FIELD QUALITY CONTROL

A. Testing Agency: Engage a qualified testing agency to perform tests and inspections.

B. Perform the following tests and inspections:

1. After installing conductors and cables and before electrical circuitry has been energized, test feeder conductors for compliance with requirements.

C. Test and Inspection Reports: Prepare a written report to record the following:

1. Procedures used.
2. Results that comply with requirements.
3. Results that do not comply with requirements and corrective action taken to achieve compliance with requirements.

D. Cables will be considered defective if they do not pass tests and inspections.

END OF SECTION 260519

SECTION 260533 - RACEWAYS AND BOXES FOR ELECTRICAL SYSTEMS

PART 1 - GENERAL

1.1 RELATED DOCUMENTS

A. Drawings and general provisions of the Contract, including General and Supplementary Conditions and Division 01 Specification Sections, apply to this Section.

1.2 SUMMARY

A. Section Includes:

1. Metal conduits, tubing, and fittings.
2. Nonmetal conduits, tubing, and fittings.
3. Metal wireways and auxiliary gutters.
4. Nonmetal wireways and auxiliary gutters.
5. Surface raceways.
6. Boxes, enclosures, and cabinets.
7. Handholes and boxes for exterior underground cabling.

B. Related Requirements:
1. Section 270528 "Pathways for Communications Systems" for conduits, wireways, surface pathways, innerduct, boxes, faceplate adapters, enclosures, cabinets, and handholes serving communications systems.

1.3 DEFINITIONS

A. EMT: Electrical metallic tubing.

B. FMC: Flexible metallic conduit.

C. GRC: Galvanized rigid steel conduit.

D. IMC: Intermediate metal conduit.

E. LFMC: Liquidtight flexible metallic conduit.

F. LFNC: Liquidtight flexible non-metallic conduit.

G. RNC: Rigid non-metallic conduit.

1.4 ACTION SUBMITTALS

PART 2 - PRODUCTS

2.1 METAL CONDUITS, TUBING, AND FITTINGS

A. Allied Tube and Conduit, Picoma, Rebublic Conduit, Western Tube and Conduit, Wheatland Tube.

B. Listing and Labeling: Metal conduits, tubing, and fittings shall be listed and labeled as defined in NFPA 70, by a qualified testing agency, and marked for intended location and application.

C. EMT: Comply with ANSI C80.3 and UL 797.

D. FMC: Comply with UL 1; zinc-coated steel.

E. GRC: Comply with ANSI C80.1 and UL 6.

F. IMC: Comply with ANSI C80.6 and UL 1242.

G. LFMC: Flexible steel conduit with PVC jacket and complying with UL 360.

H. Fittings for Metal Conduit: Comply with NEMA FB 1 and UL 514B.

1. Fittings for EMT:

a. Material: Steel.
b. Type: Compression.

2. Expansion Fittings: PVC or steel to match conduit type, complying with UL 651, rated for environmental conditions where installed, and including flexible external bonding jumper.
3. Coating for Fittings for PVC-Coated Conduit: Minimum thickness of 0.040 inch, with overlapping sleeves protecting threaded joints.

2.2 NONMETALLIC CONDUITS, TUBING, AND FITTINGS

A. AFC Cable Systems, Cantex, JM Eagle, RACO/Hubbell, Thomas & Betts.

B. Listing and Labeling: Nonmetallic conduits, tubing, and fittings shall be listed and labeled as defined in NFPA 70, by a qualified testing agency, and marked for intended location and application.

C. ENT: Comply with NEMA TC 13 and UL 1653.

D. RNC: Type EPC-40-PVC, complying with NEMA TC 2 and UL 651 unless otherwise indicated.

E. LFNC: Comply with UL 1660.

F. RTRC: Comply with UL 1684A and NEMA TC 14.

G. Fittings for ENT and RNC: Comply with NEMA TC 3; match to conduit or tubing type and material.

H. Fittings for LFNC: Comply with UL 514B.

2.3 BOXES, ENCLOSURES, AND CABINETS

A. Appleton/Emerson, Arlington, Crouse-Hinds/Eaton, Hoffman, Hubbell.

B. General Requirements for Boxes, Enclosures, and Cabinets: Boxes, enclosures, and cabinets installed in wet locations shall be listed for use in wet locations.

C. Sheet Metal Outlet and Device Boxes: Comply with NEMA OS 1 and UL 514A.

D. Cast-Metal Outlet and Device Boxes: Comply with NEMA FB 1, ferrous alloy, Type FD, with gasketed cover.

E. Nonmetallic Outlet and Device Boxes: Comply with NEMA OS 2 and UL 514C.

F. Metal Floor Boxes:

1. Material: Cast metal.
2. Type: Fully adjustable.
3. Shape: Rectangular.
4. Listing and Labeling: Metal floor boxes shall be listed and labeled as defined in NFPA 70, by a qualified testing agency, and marked for intended location and application.

G. Luminaire Outlet Boxes: Nonadjustable, designed for attachment of luminaire weighing 50 lb. Outlet boxes designed for attachment of luminaires weighing more than 50 lb shall be listed and marked for the maximum allowable weight.

H. Small Sheet Metal Pull and Junction Boxes: NEMA OS 1.

I. Access, Pull, and Junction Boxes: Comply with NEMA FB 1 and UL 1773, cast aluminum with gasketed cover.

J. Box extensions used to accommodate new building finishes shall be of same material as recessed box.

K. Device Box Dimensions: Minimum 4 inches square by 2-1/8 inches deep.

L. Gangable boxes are prohibited.

M. Hinged-Cover Enclosures: Comply with UL 50 and NEMA 250, Type 1 with continuous-hinge cover with flush latch unless otherwise indicated.

1. Metal Enclosures: Steel, finished inside and out with manufacturer's standard enamel.
2. Nonmetallic Enclosures: Fiberglass.
3. Interior Panels: Steel; all sides finished with manufacturer's standard enamel.

N. Cabinets:

1. NEMA 250, Type 1 galvanized-steel box with removable interior panel and removable front, finished inside and out with manufacturer's standard enamel.
2. Hinged door in front cover with flush latch and concealed hinge.
3. Key latch to match panelboards.
4. Metal barriers to separate wiring of different systems and voltage.
5. Accessory feet where required for freestanding equipment.
6. Nonmetallic cabinets shall be listed and labeled as defined in NFPA 70, by a qualified testing agency, and marked for intended location and application.

PART 3 - EXECUTION

3.1 RACEWAY APPLICATION

A. Outdoors: Apply raceway products as specified below unless otherwise indicated:

1. Exposed Conduit: GRC.
2. Concealed Conduit, Aboveground: EMT.
3. Underground Conduit: RNC, Type EPC-40-PVC, direct buried except concrete encased where noted of drawings.
4. Connection to Vibrating Equipment (Including Transformers and Hydraulic, Pneumatic, Electric Solenoid, or Motor-Driven Equipment): LFMC.
5. Boxes and Enclosures, Aboveground: NEMA 250, Type 3R.

B. Indoors: Apply raceway products as specified below unless otherwise indicated:

1. Exposed, Not Subject to Physical Damage: EMT.
2. Exposed and Subject to Physical Damage: GRC. Raceway locations include the following:

   a. Loading dock.
   b. Corridors used for traffic of mechanized carts, forklifts, and pallet-handling units.
   c. Mechanical rooms and janitor rooms.

3. Concealed in Ceilings and Interior Walls and Partitions: EMT.

4. Connection to Vibrating Equipment (Including Transformers and Hydraulic, Pneumatic, Electric Solenoid, or Motor-Driven Equipment): FMC, except use LFMC in damp or wet locations.
5. Damp or Wet Locations: GRC.
6. Boxes and Enclosures: NEMA 250, Type 1, except use NEMA 250, Type 4 in damp or wet locations.

C. Minimum Raceway Size: 3/4-inch trade size.

D. Raceway Fittings: Compatible with raceways and suitable for use and location.

1. Rigid and Intermediate Steel Conduit: Use threaded rigid steel conduit fittings unless otherwise indicated. Comply with NEMA FB 2.10.
2. EMT: Use compression, steel fittings. Comply with NEMA FB 2.10.
3. Flexible Conduit: Use only fittings listed for use with flexible conduit. Comply with NEMA FB 2.20.

E. Install surface raceways only where indicated on Drawings.

F. Do not install nonmetallic conduit where ambient temperature exceeds 120 deg F.

3.2 INSTALLATION

A. Comply with NECA 1 and NECA 101 for installation requirements except where requirements on Drawings or in this article are stricter. Comply with NFPA 70 limitations for types of raceways allowed in specific occupancies and number of floors.

B. Keep raceways at least 6 inches away from parallel runs of flues and steam or hot-water pipes. Install horizontal raceway runs above water and steam piping.

C. Complete raceway installation before starting conductor installation.

D. Comply with requirements in Section 260529 "Hangers and Supports for Electrical Systems" for hangers and supports.

E. Arrange stub-ups so curved portions of bends are not visible above finished slab.

F. Conceal conduit and EMT within finished walls, ceilings, and floors unless otherwise indicated. Install conduits parallel or perpendicular to building lines.

G. Support conduit within 12 inches of enclosures to which attached.

H. Raceways Embedded in Slabs:

1. Run conduit larger than 1-inch trade size, parallel or at right angles to main reinforcement. Where at right angles to reinforcement, place conduit close to slab support. Secure raceways to reinforcement at maximum 10-foot intervals.

2. Arrange raceways to keep a minimum of 2 inches of concrete cover in all directions.
3. Do not embed threadless fittings in concrete unless specifically approved by Architect for each specific location.
4. Change from ENT to GRC before rising above floor.

I. Stub-ups to Above Recessed Ceilings:

1. Use EMT, IMC, or RMC for raceways.
2. Use a conduit bushing or insulated fitting to terminate stub-ups not terminated in hubs or in an enclosure.

J. Raceway Terminations at Locations Subject to Moisture or Vibration: Use insulating bushings to protect conductors including conductors smaller than No. 4 AWG.

K. Terminate threaded conduits into threaded hubs or with locknuts on inside and outside of boxes or cabinets. Install bushings on conduits up to 1-1/4-inch trade size and insulated throat metal bushings on 1-1/2-inch trade size and larger conduits terminated with locknuts. Install insulated throat metal grounding bushings on service conduits.

L. Install raceways square to the enclosure and terminate at enclosures with locknuts. Install locknuts hand tight plus 1/4 turn more.

M. Do not rely on locknuts to penetrate nonconductive coatings on enclosures. Remove coatings in the locknut area prior to assembling conduit to enclosure to assure a continuous ground path.

N. Cut conduit perpendicular to the length. For conduits 2-inch trade size and larger, use roll cutter or a guide to make cut straight and perpendicular to the length.

O. Install pull wires in empty raceways. Use polypropylene or monofilament plastic line with not less than 200-lb tensile strength. Leave at least 12 inches of slack at each end of pull wire. Cap underground raceways designated as spare above grade alongside raceways in use.

P. Flexible Conduit Connections: Comply with NEMA RV 3. Use a maximum of 72 inches of flexible conduit for recessed and semirecessed luminaires, equipment subject to vibration, noise transmission, or movement; and for transformers and motors.

1. Use LFMC in damp or wet locations subject to severe physical damage.

Q. Mount boxes at heights indicated on Drawings. If mounting heights of boxes are not individually indicated, give priority to ADA requirements. Install boxes with height measured to center of box unless otherwise indicated.

R. Recessed Boxes in Masonry Walls: Saw-cut opening for box in center of cell of masonry block, and install box flush with surface of wall. Prepare block surfaces to

provide a flat surface for a raintight connection between box and cover plate or supported equipment and box.

S. Horizontally separate boxes mounted on opposite sides of walls so they are not in the same vertical channel.

T. Locate boxes so that cover or plate will not span different building finishes.

U. Support boxes of three gangs or more from more than one side by spanning two framing members or mounting on brackets specifically designed for the purpose.

V. Fasten junction and pull boxes to or support from building structure. Do not support boxes by conduits.

W. Set metal floor boxes level and flush with finished floor surface.

X. Set nonmetallic floor boxes level. Trim after installation to fit flush with finished floor surface.

3.3 INSTALLATION OF UNDERGROUND CONDUIT

A. Direct-Buried Conduit:

1. Excavate trench bottom to provide firm and uniform support for conduit. Prepare trench bottom as specified in Section 312000 "Earth Moving" for pipe less than 6 inches in nominal diameter.
2. Install backfill as specified in Section 312000 "Earth Moving."
3. After installing conduit, backfill and compact. Start at tie-in point, and work toward end of conduit run, leaving conduit at end of run free to move with expansion and contraction as temperature changes during this process. Firmly hand tamp backfill around conduit to provide maximum supporting strength. After placing controlled backfill to within 12 inches of finished grade, make final conduit connection at end of run and complete backfilling with normal compaction as specified in Section 312000 "Earth Moving."
4. Install manufactured duct elbows for stub-ups at poles and equipment and at building entrances through floor unless otherwise indicated. Encase elbows for stub-up ducts throughout length of elbow.

3.4 PROTECTION

A. Protect coatings, finishes, and cabinets from damage and deterioration.

1. Repair damage to galvanized finishes with zinc-rich paint recommended by manufacturer.

2. Repair damage to PVC coatings or paint finishes with matching touchup coating recommended by manufacturer.

END OF SECTION 260533

SECTION 260553 - IDENTIFICATION FOR ELECTRICAL SYSTEMS

PART 1 - GENERAL

1.1 RELATED DOCUMENTS

A. Drawings and general provisions of the Contract, including General and Supplementary Conditions and Division 01 Specification Sections, apply to this Section.

1.2 SUMMARY

A. Section Includes:
1. Identification of power and control cables.
2. Identification for conductors.
3. Underground-line warning tape.
4. Warning labels and signs.
5. Instruction signs.
6. Equipment identification labels.
7. Miscellaneous identification products.

1.3 ACTION SUBMITTALS

A. Product Data: For each electrical identification product indicated.

B. Samples: For each type of label and sign to illustrate size, colors, lettering style, mounting provisions, and graphic features of identification products.

C. Identification Schedule: An index of nomenclature of electrical equipment and system components used in identification signs and labels.

1.4 QUALITY ASSURANCE

A. Comply with ANSI A13.1.

B. Comply with NFPA 70.

C. Comply with 29 CFR 1910.144 and 29 CFR 1910.145.

D. Comply with ANSI Z535.4 for safety signs and labels.

1.5 COORDINATION

A. Coordinate identification names, abbreviations, colors, and other features with requirements in other Sections requiring identification applications, Drawings, Shop Drawings, manufacturer's wiring diagrams, and the Operation and Maintenance Manual; and with those required by codes, standards, and 29 CFR 1910.145. Use consistent designations throughout Project.

B. Coordinate installation of identifying devices with completion of covering and painting of surfaces where devices are to be applied.

C. Coordinate installation of identifying devices with location of access panels and doors.

D. Install identifying devices before installing acoustical ceilings and similar concealment.

PART 2 - PRODUCTS

2.1 CONDUCTOR IDENTIFICATION MATERIALS

A. Color-Coding Conductor Tape: Colored, self-adhesive vinyl tape not less than 3 mils thick by 1 to 2 inches wide.

B. Self-Adhesive, Self-Laminating Polyester Labels (wire markers): Preprinted, 3-mil-thick flexible label with acrylic pressure-sensitive adhesive that provides a clear, weather- and chemical-resistant, self-laminating, protective shield over the legend. Labels sized to fit the conductor diameter such that the clear shield overlaps the entire printed legend.

2.2 FLOOR MARKING TAPE

A. 2-inch-wide, 5-mil pressure-sensitive vinyl tape, with yellow and black stripes and clear vinyl overlay.

2.3 WARNING LABELS AND SIGNS

A. Comply with NFPA 70 and 29 CFR 1910.145.

B. Self-Adhesive Warning Labels: Factory-printed, multicolor, pressure-sensitive adhesive labels, configured for display on front cover, door, or other access to equipment unless otherwise indicated.

C. Warning label and sign shall include, but are not limited to, the following legends:
   1. Workspace Clearance Warning: "WARNING - OSHA REGULATION - AREA IN FRONT OF ELECTRICAL EQUIPMENT MUST BE KEPT CLEAR FOR 36 INCHES."

2. Arc Flash Warning stickers, applied at factory by manufacturer and/or in field by EC.

2.4 EQUIPMENT IDENTIFICATION LABELS (NAMEPLATES)

A. Engraved, three-ply 1/16” thick phenolic with beveled edges: Drilled for screw mounting. White letters on black background. Minimum letter height shall be 3/8 inch. Mounting screws shall be No. 4 Phillips, stainless steel, self-tapping screws. Seton.

2.5 CABLE TIES

A. General-Purpose Cable Ties: Fungus inert, self extinguishing, one piece, self locking, Type 6/6 nylon.

1. Minimum Width: 3/16 inch.
2. Tensile Strength at 73 deg F, According to ASTM D 638: 12,000 psi.
3. Temperature Range: Minus 40 to plus 185 deg F.
4. Color: Black except where used for color-coding.

2.6 MISCELLANEOUS IDENTIFICATION PRODUCTS

A. Paint: Comply with requirements in painting Sections for paint materials and application requirements. Select paint system applicable for surface material and location (exterior or interior).

B. Fasteners for Labels and Signs: Self-tapping, stainless-steel screws or stainless-steel machine screws with nuts and flat and lock washers.

PART 3 - EXECUTION

3.1 INSTALLATION

A. Verify identity of each item before installing identification products.

B. Location: Install identification materials and devices at locations for most convenient viewing without interference with operation and maintenance of equipment.

C. Apply identification devices to surfaces that require finish after completing finish work.

D. Self-Adhesive Identification Products: Clean surfaces before application, using materials and methods recommended by manufacturer of identification device.

E. Attach signs and plastic labels that are not self-adhesive type with mechanical fasteners appropriate to the location and substrate.

F. Attach plastic raceway and cable labels that are not self-adhesive type with clear vinyl tape with adhesive appropriate to the location and substrate.

G. Cable Ties: For attaching tags. Use general-purpose type, except as listed below:

1. Outdoors: UV-stabilized nylon.
2. In Spaces Handling Environmental Air: Plenum rated.

H. Underground-Line Warning Tape: During backfilling of trenches install continuous underground-line warning tape directly above line at 6 to 8 inches below finished grade. Use multiple tapes where width of multiple lines installed in a common trench exceeds 16 inches overall.

I. Painted Identification: Comply with requirements in painting Sections for surface preparation and paint application.

3.2 IDENTIFICATION SCHEDULE

A. Power-Circuit Conductor Identification, 600 V or Less: For conductors in vaults, pull and junction boxes, manholes, and handholes, use color-coding conductor tape to identify the phase.

1. Color-Coding for Phase and Voltage Level Identification, 600 V or Less: Use colors listed below for ungrounded service feeder and branch-circuit conductors.

a. Color shall be factory applied or field applied for sizes larger than No. 8 AWG, if authorities having jurisdiction permit.
b. Colors for 208/120-V Circuits:

1) Phase A: Black.
2) Phase B: Red.
3) Phase C: Blue.

c. Field-Applied, Color-Coding Conductor Tape: Apply in half-lapped turns for a minimum distance of 6 inches from terminal points and in boxes where splices or taps are made. Apply last two turns of tape with no tension to prevent possible unwinding. Locate bands to avoid obscuring factory cable markings.

B. Workspace Indication: Install floor marking tape to show working clearances in the direction of access to live parts. Workspace shall be as required by NFPA 70 and 29 CFR 1926.403 unless otherwise indicated. Do not install at flush-mounted panelboards and similar equipment in finished spaces.

C. Warning Labels for Indoor Cabinets, Boxes, and Enclosures for Power and Lighting: Self-adhesive warning labels.

1. Comply with 29 CFR 1910.145.

2. Identify system voltage with black letters on an orange background.
3. Apply to exterior of door, cover, or other access.

D. Equipment Identification Labels: On each unit of equipment, install unique designation label that is consistent with wiring diagrams, schedules, and the Operation and Maintenance Manual. Apply labels to disconnect switches and protection equipment, central or master units, control panels, control stations, terminal cabinets, and racks of each system. Systems include power, lighting, control, communication, signal, monitoring, and alarm systems unless equipment is provided with its own identification.

1. Labeling Instructions:

   a. Indoor Equipment: Engraved, laminated acrylic or melamine label. Unless otherwise indicated, provide a single line of text with 1/2-inch-high letters on 1-1/2-inch-high label; where two lines of text are required, use labels 2 inches high.
   b. Outdoor Equipment: Engraved, laminated acrylic or melamine label.
   c. Elevated Components: Increase sizes of labels and letters to those appropriate for viewing from the floor.
   d. Unless provided with self-adhesive means of attachment, fasten labels with appropriate mechanical fasteners that do not change the NEMA or NRTL rating of the enclosure.

2. Equipment to Be Labeled:

   a. Panelboards: Typewritten directory of circuits in the location provided by panelboard manufacturer. Identification shall be engraved phenolic nameplate. Indentification shall include panel designation, voltage, and phase of panel.
   b. Enclosures and electrical cabinets. Identification shall be engraved phenolic nameplate. Indentification shall include panel designation, system type, and voltage if applicable.
   c. Access doors and panels for concealed electrical items.
   d. Switchgear.
   e. Switchboards.
   f. Enclosed switches.
   g. Push-button stations.

END OF SECTION 260553

SECTION 262413 - SWITCHBOARDS

PART 1 - GENERAL

1.1 RELATED DOCUMENTS

A. Drawings and general provisions of the Contract, including General and Supplementary Conditions and Division 01 Specification Sections, apply to this Section.

1.2 SUMMARY

A. Section Includes:

1. Service and distribution switchboards rated 600 V and less.
2. Surge protection devices.
3. Disconnecting and overcurrent protective devices.
4. Identification.

1.3 ACTION SUBMITTALS

A. Product Data: For each switchboard, overcurrent protective device, surge protection device, ground-fault protector, accessory, and component.

1. Include dimensions and manufacturers' technical data on features, performance, electrical characteristics, ratings, accessories, and finishes.

B. Shop Drawings: For each switchboard and related equipment.

1. Include dimensioned plans, elevations, sections, and details, including required clearances and service space around equipment. Show tabulations of installed devices, equipment features, and ratings.
2. Detail enclosure types for types other than NEMA 250, Type 1.
3. Detail bus configuration, current, and voltage ratings.
4. Detail short-circuit current rating of switchboards and overcurrent protective devices.
5. Include descriptive documentation of optional barriers specified for electrical insulation and isolation.
6. Detail utility company's metering provisions with indication of approval by utility company.
7. Include evidence of NRTL listing for series rating of installed devices.
8. Detail features, characteristics, ratings, and factory settings of individual overcurrent protective devices and auxiliary components.

1.4 INFORMATIONAL SUBMITTALS

1.5 CLOSEOUT SUBMITTALS

A. Operation and Maintenance Data: For switchboards and components to include in emergency, operation, and maintenance manuals.

1. Include the following:

a. Routine maintenance requirements for switchboards and all installed components.
b. Manufacturer's written instructions for testing and adjusting overcurrent protective devices.
c. Time-current coordination curves for each type and rating of overcurrent protective device included in switchboards. Submit on translucent log-log graft paper; include selectable ranges for each type of overcurrent protective device.

1.6 QUALITY ASSURANCE

A. Installer Qualifications: An employer of workers qualified as defined in NEMA PB 2.1 and trained in electrical safety as required by NFPA 70E.

B. Testing Agency Qualifications: Member company of NETA or an NRTL.

1. Testing Agency's Field Supervisor: Certified by NETA to supervise on-site testing.

1.7 DELIVERY, STORAGE, AND HANDLING

A. Deliver switchboards in sections or lengths that can be moved past obstructions in delivery path.

B. Handle and prepare switchboards for installation according to NECA 400 and NEMA PB 2.1.

1.8 FIELD CONDITIONS

A. Installation Pathway: Remove and replace access fencing, doors, lift-out panels, and structures to provide pathway for moving switchboards into place.

B. Environmental Limitations:

1. Do not deliver or install switchboards until spaces are enclosed and weathertight, wet work in spaces is complete and dry, work above switchboards is complete.

1.9 COORDINATION

A. Coordinate layout and installation of switchboards and components with other construction that penetrates walls or is supported by them, including electrical and other types of equipment, raceways, piping, encumbrances to workspace clearance requirements, and adjacent surfaces. Maintain required workspace clearances and required clearances for equipment access doors and panels.

B. Coordinate sizes and locations of concrete bases with actual equipment provided. Cast anchor-bolt inserts into bases. Concrete, reinforcement, and formwork requirements are specified with concrete.

1.10 WARRANTY

A. Manufacturer's Warranty: Manufacturer agrees to repair or replace switchboard enclosures, buswork, overcurrent protective devices, accessories, and factory installed interconnection wiring that fail in materials or workmanship within specified warranty period.

1. Warranty Period: One year from date of Substantial Completion.

B. Manufacturer's Warranty: Manufacturer's agrees to repair or replace surge protection devices that fail in materials or workmanship within specified warranty period.

1. Warranty Period: One year from date of Substantial Completion.

PART 2 - PRODUCTS

2.1 SWITCHBOARDS

A. Eaton, Siemens.

B. Source Limitations: Obtain switchboards, overcurrent protective devices, components, and accessories from single source from single manufacturer.

C. Product Selection for Restricted Space: Drawings indicate maximum dimensions for switchboards including clearances between switchboards and adjacent surfaces and other items. Comply with indicated maximum dimensions.

D. Electrical Components, Devices, and Accessories: Listed and labeled as defined in NFPA 70, by a qualified testing agency, and marked for intended location and application.

E. Comply with NEMA PB 2.

F. Comply with NFPA 70.

G. Comply with UL 891.

H. Front-Connected, Front-Accessible Switchboards:

1. Main Devices: Panel mounted.
2. Branch Devices: Panel mounted.
3. Sections front and rear aligned.

I. Nominal System Voltage: 208Y/120 V.

J. Main-Bus Continuous: see drawings.

K. Indoor Enclosures: Steel, NEMA 250, Type 1.

L. Enclosure Finish for Indoor Units: Factory-applied finish in manufacturer's standard gray finish over a rust-inhibiting primer on treated metal surface.

M. Service Entrance Rating: Switchboards intended for use as service entrance equipment shall contain from one to six service disconnecting means with overcurrent protection, a neutral bus with disconnecting link, a grounding electrode conductor terminal, and a main bonding jumper.

N. Utility Metering Compartment: Barrier compartment and section complying with SCE requirements; hinged sealable door; buses provisioned for mounting utility company's current transformers and potential transformers or potential taps as required by utility company. If separate vertical section is required for utility metering, match and align with basic switchboard. Provide service entrance label and necessary applicable service entrance features.

O. Customer Metering Compartment: as required by SCE.

P. Bus Transition and Incoming Pull Sections: Matched and aligned with basic switchboard.

Q. Hinged Front Panels: Allow access to circuit breaker, metering, accessory, and blank compartments.

1. Provide phase bus arrangement A, B, C from front to back, top to bottom, and left to right when viewed from the front of the switchboard.
2. Phase- and Neutral-Bus Material: Hard-drawn copper of 98 percent conductivity.
3. Copper feeder circuit-breaker line connections.
4. Load Terminals: Insulated, rigidly braced, runback bus extensions, of same material as through buses, equipped with mechanical connectors for outgoing circuit conductors. Provide load terminals for future circuit-breaker positions at full-ampere rating of circuit-breaker position.
5. Ground Bus: Minimum-size required by UL 891, hard-drawn copper of 98 percent conductivity, equipped with mechanical connectors for feeder and branch-circuit ground conductors.
6. Main-Phase Buses and Equipment-Ground Buses: Uniform capacity for entire length of switchboard's main and distribution sections. Provide for future extensions from both ends.
7. Disconnect Links:

a. Isolate neutral bus from incoming neutral conductors.
b. Bond neutral bus to equipment-ground bus for switchboards utilized as service equipment or separately derived systems.

8. Neutral Buses: 100 percent of the ampacity of phase buses unless otherwise indicated, equipped with mechanical connectors for outgoing circuit neutral cables. Brace bus extensions for busway feeder neutral bus.

2.2 DISCONNECTING AND OVERCURRENT PROTECTIVE DEVICES

A. Molded-Case Circuit Breaker (MCCB): Comply with UL 489, with series-connected rating to meet available fault currents.

1. Thermal-Magnetic Circuit Breakers: Inverse time-current element for low-level overloads and instantaneous magnetic trip element for short circuits. Adjustable magnetic trip setting for circuit-breaker frame sizes 250 A and larger.
2. MCCB Features and Accessories:

a. Standard frame sizes, trip ratings, and number of poles.
b. Lugs: Mechanical style, suitable for number, size, trip ratings, and conductor material.
c. Application Listing: Appropriate for application; Type SWD for switching fluorescent lighting loads; Type HID for feeding fluorescent and high-intensity discharge (HID) lighting circuits.

2.3 IDENTIFICATION

A. Service Equipment Label: NRTL labeled for use as service equipment for switchboards with one or more service disconnecting and overcurrent protective devices.

PART 3 - EXECUTION

3.1 EXAMINATION

A. Receive, inspect, handle, and store switchboards according to NEMA PB 2.1.

1. Lift or move switchboards with spreader bars and manufacturer-supplied lifting straps following manufacturer's instructions.
2. Use rollers, slings, or other manufacturer-approved methods if lifting straps are not furnished.
3. Protect from moisture, dust, dirt, and debris during storage and installation.
4. Install temporary heating during storage per manufacturer's instructions.

B. Examine switchboards before installation. Reject switchboards that are moisture damaged or physically damaged.

C.

D. Examine elements and surfaces to receive switchboards for compliance with installation tolerances and other conditions affecting performance of the Work or that affect the performance of the equipment.

E. Proceed with installation only after unsatisfactory conditions have been corrected.

3.2 INSTALLATION

A. Install switchboards and accessories according to NEMA PB 2.1.

B. Equipment Mounting: Install switchboards on concrete base, 4-inch nominal thickness.

C. Install conduits entering underneath the switchboard, entering under the vertical section where the conductors will terminate. Install as per SCE requirements.

D. Place and secure anchorage devices. Use setting drawings, templates, diagrams, instructions, and directions furnished with items to be embedded.
   1. Install anchor bolts to elevations required for proper attachment to switchboards.
   2. Anchor switchboard to building structure at the top of the switchboard if required or recommended by the manufacturer.

E. Temporary Lifting Provisions: Remove temporary lifting eyes, channels, straps and brackets, and temporary blocking of moving parts from switchboard units and components.

F. Operating Instructions: Frame and mount the printed basic operating instructions for switchboards, including control and key interlocking sequences and emergency procedures. Fabricate frame of finished wood or metal and cover instructions with clear acrylic plastic. Mount on front of switchboards.

G. Install filler plates in unused spaces of panel-mounted sections.

H. Install overcurrent protective devices, surge protection devices, and instrumentation.

I. Comply with NECA 1.

3.3 CONNECTIONS

A. Bond conduits entering underneath the switchboard to the equipment ground bus with a bonding conductor sized per NFPA 70.

B. Support and secure conductors within the switchboard according to NFPA 70.

3.4 IDENTIFICATION

A. Identify field-installed conductors, interconnecting wiring, and components; provide warning signs complying with requirements for identification specified in Section 260553 "Identification for Electrical Systems."

B. Switchboard Nameplates: Label each switchboard compartment with a nameplate complying with requirements for identification specified in Section 260553 "Identification for Electrical Systems."

C. Device Nameplates: Label each disconnecting and overcurrent protective device and each meter and control device mounted in compartment doors with a nameplate complying with requirements for identification specified in Section 260553 "Identification for Electrical Systems."

3.5 DEMONSTRATION

A. Train Owner's maintenance personnel to adjust, operate, and maintain switchboards, overcurrent protective devices, instrumentation, and accessories.

END OF SECTION 262413

SECTION 262416 - PANELBOARDS

PART 1 - GENERAL

1.1 RELATED DOCUMENTS

A. Drawings and general provisions of the Contract, including General and Supplementary Conditions and Division 01 Specification Sections, apply to this Section.

1.2 SUMMARY

A. Section Includes:

1. Distribution panelboards.

1.3 DEFINITIONS

A. GFCI: Ground-fault circuit interrupter.

B. GFEP: Ground-fault equipment protection.

C. HID: High-intensity discharge.

D. MCCB: Molded-case circuit breaker.

E. SPD: Surge protective device.

F. VPR: Voltage protection rating.

1.4 ACTION SUBMITTALS

A. Product Data: For each type of panelboard.

1. Include materials, switching and overcurrent protective devices, SPDs, accessories, and components indicated.
2. Include dimensions and manufacturers' technical data on features, performance, electrical characteristics, ratings, and finishes.

B. Shop Drawings: For each panelboard and related equipment.

1. Include dimensioned plans, elevations, sections, and details.
2. Show tabulations of installed devices with nameplates, conductor termination sizes, equipment features, and ratings.
3. Detail enclosure types including mounting and anchorage, environmental protection, knockouts, corner treatments, covers and doors, gaskets, hinges, and locks.
4. Detail bus configuration, current, and voltage ratings.
5. Short-circuit current rating of panelboards and overcurrent protective devices.

6. Include evidence of NRTL listing for series rating of installed devices.
7. Detail features, characteristics, ratings, and factory settings of individual overcurrent protective devices and auxiliary components.
8. Include wiring diagrams for power, signal, and control wiring.

1.5 INFORMATIONAL SUBMITTALS

A. Panelboard Schedules: For installation in panelboards. Submit final versions after load balancing.

1.6 CLOSEOUT SUBMITTALS

A. Operation and Maintenance Data: For panelboards and components to include in emergency, operation, and maintenance manuals. In addition to items specified in Section 017823 "Operation and Maintenance Data," include the following:

1. Manufacturer's written instructions for testing and adjusting overcurrent protective devices.

1.7 MAINTENANCE MATERIAL SUBMITTALS

A. Furnish extra materials that match products installed and that are packaged with protective covering for storage and identified with labels describing contents.

1. Keys: Two spares for each type of panelboard cabinet lock.
2. Circuit Breakers Including GFCI and GFEP Types: Two spares for each panelboard.

1.8 QUALITY ASSURANCE

A. Manufacturer Qualifications: ISO 9001 or 9002 certified.

1.9 DELIVERY, STORAGE, AND HANDLING

A. Remove loose packing and flammable materials from inside panelboards.

B. Handle and prepare panelboards for installation according to NEMA PB 1.

1.10 FIELD CONDITIONS

A. Environmental Limitations:

1. Do not deliver or install panelboards until spaces are enclosed and weathertight, wet work in spaces is complete and dry, work above panelboards is complete.

1.11 WARRANTY

A. Manufacturer's Warranty: Manufacturer agrees to repair or replace panelboards that fail in materials or workmanship within specified warranty period.

1. Panelboard Warranty Period: 12 months from date of Substantial Completion.

PART 2 - PRODUCTS

2.1 PANELBOARDS AND LOAD CENTERS COMMON REQUIREMENTS

A. Product Selection for Restricted Space: Drawings indicate maximum dimensions for panelboards including clearances between panelboards and adjacent surfaces and other items. Comply with indicated maximum dimensions.

B. Electrical Components, Devices, and Accessories: Listed and labeled as defined in NFPA 70, by a qualified testing agency, and marked for intended location and application.

C. Comply with NEMA PB 1.

D. Comply with NFPA 70.

E. Enclosures: Flush and Surface-mounted, dead-front cabinets.

1. Rated for environmental conditions at installed location.

a. Indoor Dry and Clean Locations: NEMA 250, Type 1.
b. Outdoor Locations: NEMA 250, Type 3R.

2. Height: 84 inches maximum.
3. Front: Secured to box with concealed trim clamps. For surface-mounted fronts, match box dimensions; for flush-mounted fronts, overlap box. Trims shall cover all live parts and shall have no exposed hardware.
4. Hinged Front Cover: Entire front trim hinged to box and with standard door within hinged trim cover. Trims shall cover all live parts and shall have no exposed hardware.
5. Finishes:

a. Panels and Trim: galvanized steel, factory finished immediately after cleaning and pretreating with manufacturer's standard two-coat, baked-on finish consisting of prime coat and thermosetting topcoat.
b. Back Boxes: Galvanized steel.

F. Incoming Mains:

1. Location: Convertible between top and bottom.
2. Main Breaker: Main lug interiors up to 400 amperes shall be field convertible to main breaker.

G. Phase, Neutral, and Ground Buses:

1. Material: Tin-plated aluminum.

    a. Plating shall run entire length of bus.
    b. Bus shall be fully rated the entire length.

2. Interiors shall be factory assembled into a unit. Replacing switching and protective devices shall not disturb adjacent units or require removing the main bus connectors.
3. Equipment Ground Bus: Adequate for feeder and branch-circuit equipment grounding conductors; bonded to box.
4. Extra-Capacity Neutral Bus: Neutral bus rated 200 percent of phase bus and listed and labeled by an NRTL acceptable to authority having jurisdiction, as suitable for nonlinear loads in electronic-grade panelboards and others designated on Drawings. Connectors shall be sized for double-sized or parallel conductors as indicated on Drawings. Do not mount neutral bus in gutter.

H. Conductor Connectors: Suitable for use with conductor material and sizes.

1. Material: Tin-plated aluminum.
2. Terminations shall allow use of 75 deg C rated conductors without derating.
3. Size: Lugs suitable for indicated conductor sizes, with additional gutter space, if required, for larger conductors.
4. Main and Neutral Lugs: Mechanical type, with a lug on the neutral bar for each pole in the panelboard.
5. Ground Lugs and Bus-Configured Terminators: Mechanical type, with a lug on the bar for each pole in the panelboard.
6. Extra-Capacity Neutral Lugs: Rated 200 percent of phase lugs mounted on extra-capacity neutral bus.

I. NRTL Label: Panelboards or load centers shall be labeled by an NRTL acceptable to authority having jurisdiction for use as service equipment with one or more main service disconnecting and overcurrent protective devices. Panelboards or load centers shall have meter enclosures, wiring, connections, and other provisions for utility metering. Coordinate with utility company for exact requirements.

J. Panelboard Short-Circuit Current Rating: Rated for series-connected system with integral or remote upstream overcurrent protective devices and labeled by an NRTL. Include label or manual with size and type of allowable upstream and branch devices listed and labeled by an NRTL for series-connected short-circuit rating.

1. Panelboards rated 240 V or less shall have short-circuit ratings as shown on Drawings, but not less than 10,000 A rms symmetrical.

2.2 POWER PANELBOARDS

A. Eaton, Siemens, Square D.

B. Panelboards: NEMA PB 1, distribution type.

C. Doors: Secured with vault-type latch with tumbler lock; keyed alike.

1. For doors more than 36 inches high, provide two latches, keyed alike.

D. Mains: Circuit breaker.

E. Branch Overcurrent Protective Devices for Circuit-Breaker Frame Sizes 125 A and Smaller: Plug-in circuit breakers.

F. Branch Overcurrent Protective Devices for Circuit-Breaker Frame Sizes Larger Than 125 A: Plug-in circuit breakers where individual positive-locking device requires mechanical release for removal.

2.3 DISCONNECTING AND OVERCURRENT PROTECTIVE DEVICES

A. Eaton, Siemens, Square D.

B. MCCB: Comply with UL 489, with series-connected rating to meet available fault currents.

1. Thermal-Magnetic Circuit Breakers:

    a. Inverse time-current element for low-level overloads.
    b. Instantaneous magnetic trip element for short circuits.
    c. Adjustable magnetic trip setting for circuit-breaker frame sizes 250 A and larger.
2. GFCI Circuit Breakers: Single- and double-pole configurations with Class A ground-fault protection (6-mA trip).
3. GFEP Circuit Breakers: Class B ground-fault protection (30-mA trip).
4. Arc-Fault Circuit Interrupter Circuit Breakers: Comply with UL 1699; 120/240-V, single-pole configuration.
5. Subfeed Circuit Breakers: Vertically mounted.
6. MCCB Features and Accessories:

    a. Standard frame sizes, trip ratings, and number of poles.
    b. Breaker handle indicates tripped status.
    c. UL listed for reverse connection without restrictive line or load ratings.
    d. Lugs: Mechanical style, suitable for number, size, trip ratings, and conductor materials.
    e. Application Listing: Appropriate for application; Type SWD for switching fluorescent lighting loads; Type HID for feeding fluorescent and HID lighting circuits.
    f. Ground-Fault Protection: Integrally mounted relay and trip unit with adjustable pickup and time-delay settings, push-to-test feature, and ground-fault indicator.
    g. Multipole units enclosed in a single housing with a single handle.
    h. Handle Padlocking Device: Fixed attachment, for locking circuit-breaker handle in on or off position.
    i. Handle Clamp: Loose attachment, for holding circuit-breaker handle in on position.

2.4 IDENTIFICATION

A. Panelboard Label: Manufacturer's name and trademark, voltage, amperage, number of phases, and number of poles shall be located on the interior of the panelboard door.

B. Breaker Labels: Faceplate shall list current rating, UL and IEC certification standards, and AIC rating.

C. Circuit Directory: Computer-generated circuit directory mounted inside panelboard door with transparent plastic protective cover.

1. Circuit directory shall identify specific purpose with detail sufficient to distinguish it from all other circuits.

PART 3 - EXECUTION

3.1 EXAMINATION

A. Verify actual conditions with field measurements prior to ordering panelboards to verify that equipment fits in allocated space in, and comply with, minimum required clearances specified in NFPA 70.

B. Receive, inspect, handle, and store panelboards according to NEMA PB 1.1.

C. Examine panelboards before installation. Reject panelboards that are damaged, rusted, or have been subjected to water saturation.

D. Examine elements and surfaces to receive panelboards for compliance with installation tolerances and other conditions affecting performance of the Work.

E. Proceed with installation only after unsatisfactory conditions have been corrected.

3.2 INSTALLATION

A. Coordinate layout and installation of panelboards and components with other construction that penetrates walls or is supported by them, including electrical and other types of equipment, raceways, piping, encumbrances to workspace clearance requirements, and adjacent surfaces. Maintain required workspace clearances and required clearances for equipment access doors and panels.

B. Comply with NECA 1.

C. Install panelboards and accessories according to NEMA PB 1.1.

D. Equipment Mounting:
1. Attach panelboard to the vertical finished or structural surface behind the panelboard.

E. Mount top of trim 90 inches above finished floor unless otherwise indicated.

F. Mount panelboard cabinet plumb and rigid without distortion of box.

G. Mount recessed panelboards with fronts uniformly flush with wall finish and mating with back box.

H. Mounting panelboards with space behind is recommended for damp, wet, or dirty locations. The steel slotted supports in the following paragraph provide an even mounting surface and the recommended space behind to prevent moisture or dirt collection.

I. Install overcurrent protective devices and controllers not already factory installed.

1. Set field-adjustable, circuit-breaker trip ranges.
2. Tighten bolted connections and circuit breaker connections using calibrated torque wrench or torque screwdriver per manufacturer's written instructions.

J. Make grounding connections and bond neutral for services and separately derived systems to ground. Make connections to grounding electrodes, separate grounds for isolated ground bars, and connections to separate ground bars.

K. Install filler plates in unused spaces.

L. Arrange conductors in gutters into groups and bundle and wrap with wire ties.

M. Mount spare fuse cabinet in accessible location.

3.3 IDENTIFICATION

A. Identify field-installed conductors, interconnecting wiring, and components; install warning signs complying with requirements in Section 260553 "Identification for Electrical Systems."

B. Panelboard Nameplates: Label each panelboard with a nameplate complying with requirements for identification specified in Section 260553 "Identification for Electrical Systems."

C. Install warning signs complying with requirements in Section 260553 "Identification for Electrical Systems" identifying source of remote circuit.

END OF SECTION 262416

SECTION 262726 - WIRING DEVICES

PART 1 - GENERAL

1.1 RELATED DOCUMENTS

A. Drawings and general provisions of the Contract, including General and Supplementary Conditions and Division 01 Specification Sections, apply to this Section.

1.2 SUMMARY

A. Section Includes:

1. Receptacles, receptacles with integral GFCI, and associated device plates.
2. Weather-resistant receptacles.
3. Snap switches and wall-box dimmers.
4. Wall-switch and exterior occupancy sensors.
5. Communications outlets.
6. Floor service outlets, poke-through assemblies, service poles, and multioutlet assemblies.

1.3 DEFINITIONS

A. EMI: Electromagnetic interference.

B. GFCI: Ground-fault circuit interrupter.

C. Pigtail: Short lead used to connect a device to a branch-circuit conductor.

D. RFI: Radio-frequency interference.

E. TVSS: Transient voltage surge suppressor.

F. UTP: Unshielded twisted pair.

1.4 ADMINISTRATIVE REQUIREMENTS

A. Coordination:

1. Receptacles for Owner-Furnished Equipment: Match plug configurations.
2. Cord and Plug Sets: Match equipment requirements.

1.5 ACTION SUBMITTALS

A. Product Data: For each type of product.

B. Samples: One for each type of device and wall plate specified, in each color specified.

1.6 CLOSEOUT SUBMITTALS

A. Operation and Maintenance Data: For wiring devices to include in all manufacturers' packing-label warnings and instruction manuals that include labeling conditions.

PART 2 - PRODUCTS

2.1 MANUFACTURERS

A. Cooper, Hubbell, Leviton, Pass & Seymour, Sensor Switch.

B. Source Limitations: Obtain each type of wiring device and associated wall plate from single source from single manufacturer.

2.2 GENERAL WIRING-DEVICE REQUIREMENTS

A. Wiring Devices, Components, and Accessories: Listed and labeled as defined in NFPA 70, by a qualified testing agency, and marked for intended location and application.

B. Comply with NFPA 70.

C. Devices that are manufactured for use with modular plug-in connectors may be substituted under the following conditions:

1. Connectors shall comply with UL 2459 and shall be made with stranding building wire.
2. Devices shall comply with the requirements in this Section.

2.3 STRAIGHT-BLADE RECEPTACLES

A. Convenience Receptacles, 125 V, 20 A: Comply with NEMA WD 1, NEMA WD 6 Configuration 5-20R, UL 498, and FS W-C-596.

.

2.4 GFCI RECEPTACLES

A. General Description:

1. Straight blade, feed-through type.
2. Comply with NEMA WD 1, NEMA WD 6, UL 498, UL 943 Class A, and FS W-C-596.
3. Include indicator light that shows when the GFCI has malfunctioned and no longer provides proper GFCI protection.

B. Duplex GFCI Convenience Receptacles, 125 V, 20 A:

2.5 TOGGLE SWITCHES

A. Comply with NEMA WD 1, UL 20, and FS W-S-896.

B. Switches, 120/277 V, 20 A, single pole, two pole, three-way, four-way as required.

C. Pilot-Light Switches, 20 A:

1. Description: Single pole, with led-lighted handle, illuminated when switch is "off."

D. Key-Operated Switches, 120/277 V, 20 A:

1. Description: Single pole, with factory-supplied key in lieu of switch handle.

2.6 WALL-BOX DIMMERS

A. Dimmer Switches: Modular, full-wave, solid-state units with integral, quiet on-off switches, with audible frequency and EMI/RFI suppression filters.

B. Control: Continuously adjustable slider; with single-pole or three-way switching. Comply with UL 1472.

1. 600 W; dimmers shall require no derating when ganged with other devices.[

C. Fluorescent Lamp Dimmer Switches: Modular; compatible with dimmer ballasts; trim potentiometer to adjust low-end dimming; dimmer-ballast combination capable of consistent dimming with low end not greater than 20 percent of full brightness.

2.7 WALL PLATES

A. Single and combination types shall match corresponding wiring devices.

1. Plate-Securing Screws: Metal with head color to match plate finish.

2. Material for Finished Spaces: 0.035-inch-thick, satin-finished, Type 302 stainless steel.

3. Material for Unfinished Spaces: 0.035-inch-thick, satin-finished, Type 302 stainless steel.

4. Material for Damp Locations: Cast aluminum with spring-loaded lift cover, and listed and labeled for use in wet and damp locations.

B. Wet-Location, Weatherproof Cover Plates: NEMA 250, complying with Type 3R, weather-resistant, die-cast aluminum with lockable cover.

2.8 FLOOR SERVICE FITTINGS

A. Type: Modular, flush-type, multiple-service units suitable for wiring method used.

B. Compartments: Barrier separates power from voice and data communication cabling.

C. Service Plate: Rectangular, die-cast aluminum with satin finish.

D. Power Receptacle: NEMA WD 6 Configuration 5-20R, gray finish, unless otherwise indicated.

E. Voice and Data Communication Outlet: Two modular, keyed, color-coded, RJ- jacks as required by Owner.

2.9 FINISHES

A. Device Color:

1. Wiring Devices Connected to Normal Power System: As selected by Architect unless otherwise indicated or required by NFPA 70 or device listing.

B. Wall Plate Color: For plastic covers, match device color.

PART 3 - EXECUTION

3.1 INSTALLATION

A. Comply with NECA 1, including mounting heights listed in that standard, unless otherwise indicated.

B. Coordination with Other Trades:

1. Protect installed devices and their boxes. Do not place wall finish materials over device boxes and do not cut holes for boxes with routers that are guided by riding against outside of boxes.

2. Keep outlet boxes free of plaster, drywall joint compound, mortar, cement, concrete, dust, paint, and other material that may contaminate the raceway system, conductors, and cables.
3. Install device boxes in brick or block walls so that the cover plate does not cross a joint unless the joint is troweled flush with the face of the wall.
4. Install wiring devices after all wall preparation, including painting, is complete.

C. Conductors:

1. Do not strip insulation from conductors until right before they are spliced or terminated on devices.
2. Strip insulation evenly around the conductor using tools designed for the purpose. Avoid scoring or nicking of solid wire or cutting strands from stranded wire.
3. The length of free conductors at outlets for devices shall meet provisions of NFPA 70, Article 300, without pigtails.
4. Existing Conductors:

    a. Cut back and pigtail, or replace all damaged conductors.
    b. Straighten conductors that remain and remove corrosion and foreign matter.
    c. Pigtailing existing conductors is permitted, provided the outlet box is large enough.

D. Device Installation:

1. Replace devices that have been in temporary use during construction and that were installed before building finishing operations were complete.
2. Keep each wiring device in its package or otherwise protected until it is time to connect conductors.
3. Do not remove surface protection, such as plastic film and smudge covers, until the last possible moment.
4. Connect devices to branch circuits using pigtails that are not less than 6 inches in length.
5. When there is a choice, use side wiring with binding-head screw terminals. Wrap solid conductor tightly clockwise, two-thirds to three-fourths of the way around terminal screw.
6. Use a torque screwdriver when a torque is recommended or required by manufacturer.
7. When conductors larger than No. 12 AWG are installed on 15- or 20-A circuits, splice No. 12 AWG pigtails for device connections.
8. Tighten unused terminal screws on the device.
9. When mounting into metal boxes, remove the fiber or plastic washers used to hold device-mounting screws in yokes, allowing metal-to-metal contact.

E. Receptacle Orientation:

1. Install ground pin of vertically mounted receptacles up, and on horizontally mounted receptacles to the right.

F. Device Plates: Do not use oversized or extra-deep plates. Repair wall finishes and remount outlet boxes when standard device plates do not fit flush or do not cover rough wall opening.

G. Dimmers:

1. Install dimmers within terms of their listing.
2. Install unshared neutral conductors on line and load side of dimmers according to manufacturers' device listing conditions in the written instructions.

H. Arrangement of Devices: Unless otherwise indicated, mount flush, with long dimension vertical and with grounding terminal of receptacles on top. Group adjacent switches under single, multigang wall plates.

3.2 GFCI RECEPTACLES

A. Install non-feed-through-type GFCI receptacles where protection of downstream receptacles is not required.

3.3 IDENTIFICATION

A. Comply with Section 260553 "Identification for Electrical Systems."

END OF SECTION 262726