CITY OF RANCHO MIRAGE

CONTRACT DOCUMENTS AND SPECIFICATIONS

FOR

Median Island Landscape Rehabilitation Project

HIGHWAY 111 (East)
FROM PAXTON DRIVE TO BOB HOPE DRIVE
PROJECT NO. CP 12-275

Prepared by:

City of Rancho Mirage
Department of Public Works
Engineering Division

Prepared for:

CITY OF RANCHO MIRAGE
69-825 Highway 111
Rancho Mirage, California 92270
(760) 770-3224

February 2014

CITY OF RANCHO MIRAGE
CALIFORNIA

CONTRACT DOCUMENTS AND SPECIFICATIONS

FOR

Median Island Landscape Rehabilitation Project

HIGHWAY 111 (East)
FROM PAXTON DRIVE TO BOB HOPE DRIVE
PROJECT NO. CP 12-275

Approved by:

William A. Enos, P.E.
R.C.E. 43910

2/12/14
Date

REGISTERED PROFESSIONAL ENGINEER
WILLIAM A. ENOS
No. 43910
CIVIL
STATE OF CALIFORNIA

TABLE OF CONTENTS

Highway 111 (East) Median Island Landscape Rehabilitation Project
Project No. CP 12-275

NOTICE INVITING SEALED BIDS 00020-1

INSTRUCTIONS TO BIDDERS 00100-1

PROPOSAL DOCUMENTS

- Bid Proposal 00310-1
- Bidder's Information 00310-2
- List of Subcontractors 00310-3
- Bid Bond 00310-5
- Non-Collusion Affidavit 00310-7
- Bid Proposal Sheet 00310-8
- Schedule of Values 00310-10

CONTRACT DOCUMENTS

- Standard Agreement for Public Works Construction 00312-1
- Schedule A to Standard Agreement 00312-11
- Letter of Credit 00312-12
- Performance Bond 00312-14
- Payment Bond 00312-16
- Certificate of Insurance and Endorsement (Liability) 00312-18
- Certificate of Insurance and Endorsement (Workers' Compensation) 00312-22
- Certificate of Completion of Standard Agreement for Public Works Construction 00312-23
- Notice of Acceptance 00312-24

GENERAL PROVISIONS

- Index of General Provisions 00700-1A
- General Provisions of the Contract ..... 00700-1 to 00700-11

SPECIAL PROVISIONS

- PART I - GENERAL PROVISIONS 00800-SP1

TECHNICAL PROVISIONS

Section 010000 – General Landscape Conditions
Section 016010 – Electrical General Conditions
Section 016050 – Basic Electrical Materials and Methods
Section 016111 – Conduit and Wire
Section 016160 – Meter Pedestal and Panel Boards
Section 016500 – Lighting Fixtures
Section 0321413 – Interlocking Pavers
Section 0328400 – Automatic Irrigation
Section 0329000 – Landscape Planting
Section 0329010 – Maintenance
Section 0329020 – Contract Closeout

ATTACHMENTS

L.E.D. Lights – Kim Lighting Micro-Flood EL217
Paver Joint Stabilizing Sealer – Surebond SB-1300

CITY OF RANCHO MIRAGE

NOTICE INVITING SEALED BIDS FOR
Highway 111 (East) Median Island Landscape Rehabilitation Project
Project No. CP 12-275

PUBLIC NOTICE IS HEREBY GIVEN that the City of Rancho Mirage, hereinafter referred to as CITY, invites sealed bids for the above-stated project and will receive such bids in the offices of the Director of Public Works up to the hour of **2:00 pm** on **Thursday,** the **13th** day of **March, 2014,** at which time they will be publicly opened and read aloud.

The work to be done consists of furnishing all materials, equipment, tools, labor, and incidentals as required by the Plans, Specifications and Contract Documents for the above-stated projects. The general items of work to be done hereunder consist of demo work, constructing new irrigation, landscaping, and landscape lighting, as well as all other appurtenant or related work as shown or referenced on the plans.

Plans and Specifications are available only through the City's website at: www.RanchoMirageCA.gov. Under Quick Links select Notice Inviting Bids/P&S/RFPs ► Plans and Specifications ► Highway 111 Median Island Landscape Rehabilitation Project, CP 12-275. If you are interested in this project, you will need to visit the City's website and sign up. To receive plans you must complete the on-line registration form. Once you have signed up you will receive an email with the requested documents for download and printing.

Any contract entered into pursuant to this notice will incorporate the provisions of the State Labor Code. Compliance with the prevailing rates of wages and apprenticeship employment standards established by the State Department of Industrial Relations will be required.

No bidder will be discriminated against on the basis of race, color, national origin, ancestry, sex, or religion in any consideration leading to the award of contract.

The contract documents call for monthly progress payments based upon the engineers' estimate of the percentage of work completed. The CITY will retain 5 percent of each progress payment as security for completion of the balance of the work. At the request and expense of the successful bidder, the City will pay the amounts so retained upon compliance with the requirements of Public Contract Code, Part 5, Section 22300 and the provisions of the contract documents pertaining to Substitution of Securities.

Bids must be prepared on the approved proposal forms in conformance with the Instructions to Bidders and submitted in a sealed envelope plainly marked on the outside **"SEALED BID FOR HIGHWAY 111 (EAST) MEDIAN ISLAND LANDSCAPE REHABILITATION PROJECT CITY PROJECT 12-275 - DO NOT OPEN WITH REGULAR MAIL."** City staff will not be available to respond to questions on the day of bid opening.

The CITY reserves the right to reject any or all bids, to waive any irregularity, to accept any bid or portion thereof, and to take all bids under advisement for a period of sixty (60) days.

At the time of contract award, the prime contractor shall possess a valid **Class A contractor's license and/or a combination of Class "C" specialty Contractors license(s) sufficient to perform the work.**

BY ORDER OF the City Council of the City of Rancho Mirage.

Dated February 12, 2014

By Vallerie Walthour

Vallerie Walthour, Public Works Department Secretary
City of Rancho Mirage
69-825 Highway 111
Rancho Mirage, CA 92270
(760) 770-3224

INSTRUCTIONS TO BIDDERS

PROPOSAL FORMS

Bids shall be submitted in writing on the Proposal forms provided by the CITY. All information requested therein must be clearly and legibly set forth in the manner and form indicated. The CITY will not consider any proposal not meeting these requirements.

PROPOSAL GUARANTEE (BID BOND)

Proposals must be accompanied by a proposal guarantee consisting of a certified check or bid bond payable to the CITY in the amount of ten percent (10%) of the total amount bid. Any proposal not accompanied by such a guarantee will not be considered. If a bidder to whom a contract is awarded fails or refuses to execute the contract documents or furnish the required insurance policies and bonds as set forth in those documents, the proposal guarantee shall be forfeited to the CITY. The proposal guarantees of all bidders will be held until the successful bidder has properly executed all contract documents.

NONCOLLUSION AFFIDAVIT

Bidder shall declare that the only persons or parties interested in the proposal as principals are those named therein; that no officer, agent, or employee of the CITY is personally interested, directly or indirectly, in the proposal; that the proposal is made without connection to any other individual, firm, or corporation making a bid for the same work; and that the proposal is in all respects fair and without collusion or fraud. The Noncollusion Affidavit shall be executed and submitted with the proposal.

PROPOSAL BID SHEET

Bidders shall give unit prices for each and all of the items set forth. No aggregate bids shall be considered. The bidder shall set forth for each item of work, in clearly legible figures, a unit item price and a total for the item in the respective spaces provided for this purpose. The quantities listed in the Bid sheets are supplied to give an indication of the general scope of work, but the accuracy of figures is not guaranteed and the bidder shall make his/her own estimates from the drawings. In case of a variation between the unit price and the totals shown by the bidder, the unit price shall be considered to be the bid.

DELIVERY OF PROPOSAL

Proposals may be mailed or delivered by messenger. However, it is the bidder's responsibility alone to ensure delivery of the proposal to the hands of the CITY'S designated official prior to the bid opening hour stipulated in the "Notice Inviting Sealed Bids." Late proposals will not be considered. Proposals shall be enclosed in a sealed envelope plainly marked on the outside, “SEALED BID FOR HIGHWAY 111 (EAST) MEDIAN ISLAND LANDSCAPE REHABILITATION PROJECT, CITY PROJECT 12-275 - DO NOT OPEN WITH REGULAR MAIL."

WITHDRAWAL OF PROPOSALS

A proposal may be withdrawn by a written request signed by the bidder. Such requests must be delivered to the CITY'S designated official prior to the bid opening hour stipulated in the "Notice Inviting Sealed Bids." The withdrawal of a proposal will not prejudice the right of the bidder to submit a new proposal, providing there is time to do so. Proposals may not be withdrawn after said hour without forfeiture of the proposal guarantee.

IRREGULAR PROPOSALS

Unauthorized conditions, limitations, or provisions attached to a proposal will render it irregular and may cause its rejection. The completed proposal forms shall be without interlineations, alterations, or erasures. Alternative proposals will not be considered unless specifically requested. No oral, telegraphic, or telephonic proposal, modification, or withdrawal will be considered.

TAXES

No mention shall be made in the proposal of Sales Tax, Use Tax, or any other tax, as all amounts bid will be deemed and held to include any such taxes that may be applicable.

DISQUALIFICATION OF BIDDERS

In the event that any bidder acting as a prime contractor has an interest in more than one proposal, all such proposals shall be rejected, and the bidder disqualified. This restriction does not apply to subcontractors or suppliers who may submit quotations to more than one bidder, and while doing so, may also submit a formal proposal as a prime contractor.

No contract will be executed unless the bidder is licensed in accordance with the provisions of the State Business and Professions Code.

INTERPRETATION OF PLANS AND DOCUMENTS

If any person contemplates submission of a bid for the proposed contract and is in doubt as to the true meaning of any part of the plans, specifications or other proposed contract documents, or finds discrepancies in, or omissions from, the drawings or specifications, he may submit to the Engineer of said CITY a written request for an interpretation or correction thereof. The person submitting the request shall be responsible for its prompt delivery. Any interpretation or correction of the proposed documents shall be made only by addendum duly issued and copy of such addendum shall be mailed or delivered to each person receiving a set of such documents. The Engineer will not be responsible for any other explanation or interpretations of the proposed documents.

ADDENDA OR BULLETINS

The effect of all addenda to the Contract Documents shall be considered in the contract, and said addenda shall be made a part of the contract documents and shall be returned with them. Before submitting his/her bid, each bidder shall inform himself as to whether or not any addenda have been issued, and failure to cover in this bid any such addenda issued may render his/her bid irregular and may result in its rejection by the City.

LEGAL RESPONSIBILITIES

All proposals must be submitted, filed, made, and executed in accordance with State and Federal laws relating to bids for contracts of this nature whether the same or expressly referred to herein or not.

Any bidder submitting a proposal shall by such action thereby agree to each and all of the terms, conditions, provisions, and requirements set forth, contemplated, and referred to in the Plans, Specifications, and Contract Documents, and to full compliance therewith.

AWARD OF CONTRACT

Following a review of the bids, the CITY shall determine whether to award the contract or to reject all bids. The award of contract, if made, shall be to the lowest responsible Bidder as determined solely by the CITY. At the time of contract award, the successful bidder shall hold a **Class A contractor's license and/or a combination of Class C specialty contractors licenses,** as required to perform the work, issued by the State of California. Additionally, the CITY reserves the right to reject any or all proposals, to accept any bid or portion thereof, to waive any irregularity, and to take the bids under advisement for the period of time stated in the "Notice Inviting Sealed Bids," all as may be required to provide for the best interests of the CITY. In no event will an award be made until all necessary investigations are made as to the responsibility and qualifications of the bidder to whom the award is contemplated.

No bidder may withdraw his/her proposal for a period of sixty (60) days after the time set for opening thereof. However, the CITY will return all proposal guarantees within ten (10) days after the award of the contract or rejection of the bids, as the case may be, to the respective bidders whose proposals they accompany.

LABOR CODE

Pursuant to the provisions of Section 1773 and 1773.2 of the Labor Code of the State of California, the CITY has obtained the general provisions rate of per diem wages and the general prevailing rate for holiday and overtime work in this locality for each craft, classification or type of workman needed to execute the contract from the director of the Department of Industrial Relations. These rates are on file with the Clerk of the CITY, and copies will be made available to any interested party on request. It shall be the responsibility of the prime CONTRACTOR to comply with all applicable sections of the Labor Code.

The CONTRACTOR shall comply with the provisions of Section 1774 of the Labor Code. Failure to comply with the subject section will subject the CONTRACTOR to penalty and forfeiture provisions of Section 1775 of the Labor Code.

Pursuant to the provisions of Section 1770 of the Labor Code, the general prevailing rate of wages has been ascertained (which rate includes employer payments for health and welfare, vacation, pension and similar purposes) applicable to the work to be done, for straight time, overtime, Saturday, Sunday, and holiday work.

The holiday wage rate listed shall be applicable to all holidays recognized in the collective bargaining agreement of the particular craft, classification or type of workmen concerned.

The CITY will not recognize any claim for additional compensation because of the payment by the CONTRACTOR of any wage rate in excess of the prevailing wage rate set forth in the contract. The possibility of wage increases is one of the elements to be considered by the CONTRACTOR in determining his bid, and will not under any circumstances be considered as the basis of a claim against the CITY on the contract.

The CONTRACTOR shall comply with Section 1777.5 of the Labor Code, which allows the employment of properly registered apprentices on public works projects. The CONTRACTOR is responsible for the compliance with this section for all apprentice able occupations and subcontractors.

The CONTRACTOR and subcontractors shall comply with all State of California laws against employment discrimination.

WORKERS COMPENSATION CERTIFICATE

Section 3700 of the State Labor Code requires that every employer shall secure the payment compensation by either being insured against liability to pay compensation with one or more insurers or by securing a Certificate of Consent to Self-Insure from the State of California Director of Industrial Relations.

In accordance with this section and with Section 1861 of the State of California Labor Code, the CONTRACTOR shall sign a Workers Compensation Insurance Certificate which is included with the Contract Agreement, and submit same to CITY along with the other required contract documents prior to performing any work. Reimbursement for this requirement shall be considered as included in the various items of work.

CLAYTON ACT AND CARTWRIGHT ACT

Section 4551 of the State Government Code specifies that in executing a public works contract with the City to supply goods, services or materials, the CONTRACTOR or Subcontractor offers and agrees to assign to the CITY all rights, title and interest in and to all causes of action it may have under Section 4 of the Clayton Act (15 U.S.C. Sec. 15) or under the Cartwright Act (Chapter 2 commencing with Sec. 16700) of Part 2 of Division 7 of the Business and Professions Code, arising from purchase of goods, services or materials pursuant to the contract or subcontract. This assignment shall become effective when the CITY tenders final payment to the CONTRACTOR without further acknowledgment by the parties.

SUBSTITUTION OF SECURITIES

In conformance with the State of California Public Contract Code, Part 5, Section 22300, the CONTRACTOR may substitute securities for any monies withheld by the CITY to ensure performance under the contract.

At the request and expense of the CONTRACTOR, the CONTRACTOR has the option to set up an escrow agreement account with a local bank for direct deposit of the retention or deposit securities which have been approved by the CITY and deposited with a state or federally chartered bank as the escrow agent. Said securities will be used as a substitute for retention earnings required to be withheld by the CITY, pursuant to the construction contract. Said securities shall be solely for this project. When the CONTRACTOR deposits the CITY-approved securities with the escrow agent, the escrow agent shall notify the CITY within 10 calendar days of the deposit. Said securities shall be evaluated quarterly by the escrow agent to verify the current market value. If the current market value of said securities falls below the required amount, the escrow agent shall notify the CONTRACTOR and require additional securities and/or cash be submitted for CITY approval and be held in the escrow account to meet the CONTRACTOR'S obligations. Said securities shall be held by the escrow agent until such time as the escrow agent receives written notification from the CITY that the CONTRACTOR has satisfactorily completed his/her contract obligations.

The type of escrow account or types of securities deposited and the method of release shall be approved by the City Attorney's office.

BID PROPOSAL

BIDDER'S NAME _____

TO CITY OF RANCHO MIRAGE, as CITY:

In accordance with CITY'S "Notice Inviting Sealed Bids", the undersigned BIDDER hereby proposes to furnish all materials, equipment, tools, labor, and incidentals required for the above-stated project as set forth in the Plans, Specifications, and Contract Documents therefore, and to perform all work in the manner and time prescribed therein.

BIDDER declares that this proposal is based upon careful examination of the work site, Plans, Specifications, Instructions to Bidders, and Contract Documents. If this proposal is accepted for award, BIDDER agrees to enter into a contract with CITY at the unit and/or lump sum prices set forth in the following Proposal Bid Sheets. BIDDER understands that failure to enter into a contract in the manner and time prescribed will result in forfeiture to CITY of the Bid Bond accompanying this proposal.

BIDDER understands that a bid is required for the entire work, that the estimated quantities set forth in the Proposal Bid Sheet are solely for the purpose of comparing bids, and that final compensation under the contract will be based upon the actual quantities of work satisfactorily completed. It is agreed that the unit and/or lump sum prices bid include all appurtenant expenses, taxes, royalties, and fees. In the case of discrepancies in the amounts bid, unit prices shall govern over extended amounts.

BIDDER agrees and acknowledges that he is aware of the provisions of Section 3700 of the Labor Code which requires that every employer be insured against liability for workers compensation or to undertake self-insurance in accordance with the provisions of that code, and that the successful BIDDER shall comply with such provisions of that code before commencing the performance of the Contract.

BIDDER certifies that in all previous contracts or subcontracts, all reports that may have been due under the requirements of any agency, state, or federal equal employment opportunity orders have been satisfactorily filed, and that no such reports are currently outstanding.

BIDDER declares that the only persons or parties interested in this proposal as principals are those named herein; that no officer, agent, or employee of the CITY is personally interested, directly or indirectly, in this proposal; that this proposal is made without connection to any other individual, firm, or corporation making a bid for the same work; and that this proposal is in all respects fair and without collusion or fraud.

DATED_____, 2014 BIDDER_____

(BY)_____

TITLE_____

BIDDER'S ADDRESS:

_____

_____

PHONE:_____

FAX:_____

BIDDER'S INFORMATION

BIDDER certifies that the following information is true and correct.

Bidder's Name_____

Business Address_____

_____

Telephone_____

State Contractor's License No. and Class_____

Original Date Issued_____ Expiration Date _____

The following are the names, titles, addresses, and phone numbers of all individuals, firm members, partners, joint ventures, and/or corporate officers having a principal interest in this proposal:

_____

_____

_____

_____

The dates of any voluntary or involuntary bankruptcy judgments against any principal having an interest in this proposal are as follows:

_____

_____

_____

All current and prior dbas, aliases, and/or fictitious business names for any principal having an interest in this proposal are as follows.

_____

_____

_____

LIST OF SUBCONTRACTORS

The Bidder's attention is directed to provision in Section 2-3 of the Standard Specifications for the Requirements and Conditions that he must observe in the preparation of the proposal form and the submission of the bid.

BIDDER proposes to subcontract certain portions of the work as follows:

Subcontractor Name	License No.	Location of Business	Percent of Total Contract	Specific Description of Subcontract

REFERENCES

The following are the names, addresses, and phone numbers for three public agencies or private clients for which BIDDER has performed similar work within the past two years:

_____

_____

_____

_____

_____

_____

_____

_____

_____

_____

_____

DESIGNATOR OF SURETIES

The following are the names, addresses, and phone numbers for all brokers and sureties from whom BIDDER intends to procure insurance and bonds:

_____

_____

_____

_____

_____

_____

_____

_____

_____

_____

BID BOND

KNOW ALL MEN BY THESE PRESENTS that _____, as BIDDER, and _____, as SURETY, are held and firmly bound unto the CITY OF RANCHO MIRAGE, as CITY, in the penal sum of _____ dollars ($_____), which is ten percent (10%) of the total amount bid by BIDDER to CITY for the above-stated project, for the payment of which sum BIDDER and SURETY agree to be bound jointly, severally and firmly by these presents.

THE CONDITIONS OF THIS OBLIGATION ARE SUCH that, whereas BIDDER is about to submit a bid to CITY for the above-stated project, if said bid is rejected, or if said bid is accepted and a contract is awarded and entered into by BIDDER in the manner and time specified, then this obligation shall be null and void; otherwise, it shall remain in full force and effect in favor of CITY.

WITNESS our hands this _____day of _____, 2014. (seal)

_____
CONTRACTOR (CORPORATION)-TYPE

By:_____
President

By: _____
Secretary/Treasurer

NOTE: SIGNATURE OF CORPORATE OFFICIALS MUST BE NOTARIZED.

BID BOND - page 2

(seal)

_____
SURETY'S NAME-TYPE

_____
Mailing Address

By:_____
Name

_____
Title

NOTE: SIGNATURE OF SURETY MUST BE NOTARIZED

NON-COLLUSION AFFIDAVIT

STATE OF CALIFORNIA)

)

COUNTY OF)

_____, being first duly sworn, deposes and says that he/she is _____ (sole owner, a partner, president, etc.) of_____ the party making the foregoing bid;

That such bid is not made in the interest of or on behalf of any undisclosed person, partnership, company, association, organization or corporation; that such bid is genuine and not a collusive or sham bid, or that anyone shall refrain from bidding; that said bidder has not in any manner, directly or indirectly, sought by agreements, communication or conference with anyone to fix the bid price of said bidder or of any other bidder, or to fix the overhead, profit, or cost element of such bid price, or of that of any other bidder, or to secure any advantage against the public body awarding the contract or anyone interested in the proposed contract; that all statements contained in such bid are true, and further, that said bidder has not, directly or indirectly submitted his/her bid price, or any breakdown thereof, or the contents thereof, or divulged information or data relative thereto, or paid and will not pay any fee in connection, organization, bid depository, or to any member or persons as have a partnership or other financial interest with said bidder in his/her general business.

Signed:_____

Title: _____

MUST BE NOTARIZED

BID PROPOSAL

Highway 111 (East) Median Island Landscape Rehabilitation Project
Project No. CP 12-275

ITEM NO.	DESCRIPTION	QTY	UNIT PRICE	TOTAL PRICE
1.	MOBILIZATION, BONDS & INSURANCE (NTE 10% of total bid)	1 LS	$_____	$_____
2.	TRAFFIC CONTROL	1 LS	$_____	$_____
3.	DEMOLITION (PLANTS, SAWCUT AND REMOVAL OF STAMPED CONCRETE, IRRIGATION AND LIGHTING/ELECTRICAL)	1 LS	$_____	$_____
4.	DECOMPOSED GRANITE "DESERT GOLD", 2″ THICK, COMPACTED INCLUDING STABILIZER, EXCAVATION, GRADING, AND TREATING AREA WITH PRE-EMERGENT WEED AGENT PRIOR TO, AND AFTER, PLACING DG AND AS PER MANUFACTURER'S SPECIFICATIONS	40,800 SF	$_____	$_____
5.	BOULDERS, GRAY GRANITE 48" W x 40" L x 40"' H (A)	34 EA	$_____	$_____
6.	BOULDERS, GRAY GRANITE 36" W x 30" H x 30" L (B)	45 EA	$_____	$_____
7.	ACKERSTONE "HOLLAND II" CONCRETE INTERLOCKING PAVERS (INCLUDES ROADBASE, SAND BED, PAVERS, JOINT SAND, EDGE-PRO PLASTIC EDGING, POWER WASH AND SEAL – REFER TO DETAIL ON PLANS) (FOR REPAIRS OF EXISTING STAMPED CONCRETE DAMAGE)	600 SF	$_____	$_____
8.	4"- 6" GRAY COBBLE (TO MATCH WITH COBBLE WEST OF PAXTON DR.), SET IN 1,800 PSI TYPE 'S' MORTAR DRY-PACK, GRAY-COLORED MORTAR	3,600 SF	$_____	$_____
9.	COMPLETE AND OPERATIONAL IRRIGATION SYSTEM	1 LS	$_____	$_____
10.	SHRUBS, 5 GAL	537 EA	$_____	$_____
11.	SOIL PREPARATION AND FINE GRADING	40,800 SF	$_____	$_____
12.	ELECTRICAL AND LANDSCAPE LIGHTING (COMPLETE AND	1 LS	$_____	$_____

BID PROPOSAL

Highway 111 (East) Median Island Landscape Rehabilitation Project
Project No. CP 12-275

ITEM NO.	DESCRIPTION	QTY	UNIT PRICE	TOTAL PRICE
	OPERATIONAL)			
13.	90 DAYS MAINTENANCE	1 LS	$_____	$_____
14.	ENCROACHMENT PERMIT FEE	1 LS	$23,000.00	$23,000.00
			TOTAL BID AMOUNT (ITEMS 1-14)	$_____

TOTAL BID $_____

Total bid amount in words:

_____

_____

_____

Note 1: The estimated quantities listed in the Proposal Bid Sheet(s) are supplied to give an indication of the general scope of work. The accuracy of the figures is not guaranteed and the bidder shall make their own estimates from the drawings. In the case of a variation between the unit price and the totals shown by the bidder, the unit price shall be considered to be the bid to determine the final pay amount.

By signing below the bidder acknowledges their understanding of the scope of work and that bidder has read, understands, and agrees to the terms and conditions of the project documents and all of the attachments and addenda.

AUTHORIZED SIGNATURE: _____

PRINT SIGNER'S NAME AND TITLE: _____

_____

DATE SIGNED: _____

COMPANY NAME, ADDRESS, TELEPHONE: _____

_____

_____

SCHEDULE OF VALUES

Contractor shall provide the following unit prices to supply and install complete in-place the following items for the purpose of establishing additions and/or deletions to the contract.

ITEM NO.	DESCRIPTION	UNIT PRICE
1.	SUPPLY/INSTALL RAINBIRD ESP-LXM, ETM-LXM ET MANAGER, RSD RAIN SENSOR IN A STRONG BOX SB-24SS ENCLOSURE WITH CSA-FAN, Z-2 TRAP SURGE ARRESTOR, GROUND ROD, ON/OFF SWITCH, AND FLOURESCENT LIGHT OPTIONS	$_____/EACH
2.	SUPPLY/INSTALL 1 ½" GRISWOLD 2000K NORMALLY OPEN MASTER VALVE IN VALVE BOX	$_____/EACH
3.	SUPPLY/INSTALL RAINBIRD FS100B FLOW SENSOR IN VALVE BOX	$_____/EACH
4.	SUPPLY/INSTALL 1 ½" NIBCO T-FP-600 FULL PORTED BALL VALVE IN THE VALVE BOX	$_____/EACH
5.	SUPPLY/INSTALL ¾" RAIN BIRD 33DRC QUICK COUPLER IN VALVE BOX	$_____/EACH
6.	SUPPLY/INSTALL 1" RAINBIRD PESB REMOTE CONTROL VALVE IN VALVE BOX	$_____/EACH
7.	SUPPLY/INSTALL 1" RAINBIRD XCZ-100-B-COM DRIP CONTROL KIT IN VALVE BOX	
8.	SUPPLY/INSTALL 1" RAINBIRD XCZ-LF-100-PRF DRIP CONTROL KIT IN VALVE BOX	$_____/EACH
9.	SUPPLY/INSTALL TORO FCH-H-FIPT AUTOMATIC FLUSH VALVE IN VALVE BOX	$_____/EACH
10.	SUPPLY/INSTALL RAINBIRD RWS-M-B-C-SOCK ROOT WATERING SYSTEM WITH 1402 BUBBLER	$_____/EACH
11.	SUPPLY/INSTALL RAINBIRD XB-10PC-1032 XERI-BUG EMITTER ON RAINBIRD 12" FLEXI RISER	$_____/EACH
12.	SUPPLY/INSTALL RAINBIRD XB-05PC-1032 XERI BUG EMITTER ON RAINBIRD 12" FLEXI RISER	$_____/EACH
13.	#14 UF DIRECT BURIAL CONTROL WIRE	$_____/LF
14.	1 ½" SCH. 40 PVC MAINLINE	$_____/LF
15.	1" SCH. 40 PVC LATERAL LINE	$_____/LF
16.	¾" SCH. 40 PVC LATERAL LINE	$_____/LF
17.	½" SCH. 40 PVC EMITTER LINE	$_____/LF
18.	SUPPLY/INSTALL RAINBIRD XFS-09-12 LANDSCAPE DRIP LINE	$_____/LF
19.	3" SCH. 40 PVC SLEEVE	$_____/LF
20.	5" SCH. 40 PVC WIRE SLEEVE	$_____/LF
21.	SUPPLY/INSTALL KIM LIGHTING #EL217FL-15LED120-BL FIXTURE WITH HOOD #FH215 BL AND BASE #SM18BL	$_____/EACH
22.	SUPPLY/INSTALL KIM LIGHTING #EL217FL-5LED120-BL FIXTURE WITH HOOD #FH215BL AND BASE #SM18BL	$_____/EACH
23.	SUPPLY/INSTALL GFCI DUPLEX RECEPTICAL IN WEATHER PROOF ENCLOSURE ON ARLINGTON INDUSTRIES, GPD19BR PERMA POST	
24.	SUPPLY/INSTALL ELECTRICAL METER PEDESTAL	$_____/EACH
25.	#10 COPPER WIRE (PER ELECTRICAL PLAN)	$_____/LF
26.	1" SCH. 40 PVC ELECTRICAL CONDUIT	$_____/LF
27.	¾" SCH. 40 PVC ELECTRICAL CONDUIT	$_____/LF
28.	SUPPLY/INSTALL ELECTRICAL PULL BOX	$_____/EACH

STANDARD AGREEMENT FOR PUBLIC WORKS CONSTRUCTION

The CITY OF RANCHO MIRAGE ("CITY") and _____ ("CONTRACTOR"), through this agreement ("Agreement"), agree as follows:

A. CONTRACTOR shall construct the following public improvements ("work") identified as:

HIGHWAY 111 (EAST) MEDIAN ISLAND LANDSCAPE REHABILITATION PROJECT (FROM PAXTON DRIVE TO BOB HOPE DRIVE), CP 12-275

B. CITY-approved plans and specifications for the construction of the work, which are incorporated herein by reference and prepared by:

RGA Landscape Architects, Inc.

are identified as:

HIGHWAY 111 MEDIAN ISLANDS EAST (PAXTON DR. TO BOB HOPE DR. CP 12-275)

C. The following are attached hereto and made a part hereof and/or are incorporated by reference: Schedule A, Notice Inviting Sealed Bids, Instructions to Bidders, Bid Proposal Documents, Contract Documents, all attachments and appendices, General Provisions, Special Provisions, Technical Provisions, Attachments, and all referenced specifications, details, standard drawings and appendices, together with all required bonds, insurance certificates, permits, notices and affidavits; and also including any and all addenda or supplemental agreements clarifying, amending or extending the work contemplated as may be required to ensure its completion in an acceptable manner.

1. COMPENSATION: For and in consideration of the payments to be made by CITY, CONTRACTOR agrees to furnish all materials and perform all work required for the work, and to fulfill all other obligations as set forth herein.

CONTRACTOR agrees to receive and accept the prices set forth in the Bid Proposal as full compensation for furnishing all materials, performing all work, and fulfilling all obligations hereunder. Said compensation shall cover all expenses, losses, damage and consequences arising out of the nature of work during its progress or prior to its acceptance, including those for well and faithfully completing the work and the whole thereof in the manner and time specified herein; and also including those arising from actions of the elements, unforeseen difficulties or obstructions encountered in the prosecution of the work, suspension or discontinuance of the work and all other unknowns or risks of any description connected with the work.

CITY hereby promises and agrees to retain, and does hereby retain, CONTRACTOR to provide the materials, do the work, and fulfill the obligations according to the terms and conditions herein contained and referred to, for prices aforesaid, and hereby contracts to pay the same at the time, in the manner and upon the conditions set forth herein.

2. IMPROVEMENTS: For valuable consideration, CONTRACTOR agrees to do, or cause to be done, all of the work described herein by the date specified in Schedule A. CONTRACTOR warrants that all of the materials supplied and work to be done will be of good quality and workmanship. Said work shall be in strict conformity with the plans and specifications of the work, the standard specifications and drawings for public improvements adopted by CITY and this Agreement. CONTRACTOR shall furnish all transportation, equipment, labor, services, permits, utilities and all other items necessary to complete the work. CONTRACTOR shall pay all claims, demands and liability arising out of, or resulting from or in connection with, the performance of the work. CONTRACTOR shall furnish accurate "as constructed" plans. CONTRACTOR'S obligations herein are not limited by any cost estimates nor will any estimate be a measure of damages.

3. **TIME FOR COMPLETION:** The work shall be commenced on a date to be specified in a written Notice to Proceed from the CITY and shall be completed within **ninety (90) calendar days** from and after said date. After completion of the work, for an additional **ninety (90) calendar days** CONTRACTOR shall maintain the completed work and cure any and all defects thereto at CONTRACTOR's sole expense. The CITY will determine in its sole discretion whether any defects exist. It is expressly agreed that except for extensions of time duly granted in the manner and for the reasons specified in the General Provisions, time shall be of the essence.

4. **INSURANCE:** CONTRACTOR shall not commence or continue to perform any work unless CONTRACTOR has in full force and effect all insurance required hereunder with companies satisfactory to CITY. To be acceptable, insurers must be authorized to do business, and have an agent for service of process, in California, and have an "A" policyholder's rating and a financial rating of at least Class V, in accordance with the current Best's Ratings. All insurance policies shall be maintained until the work is accepted by CITY and provide for coverage of all causes of action or disputes arising out of acts in performance of the construction of the work herein, whether said causes or disputes are filed or brought to the attention of CITY before or after the termination of this Agreement.

Concurrent with execution of this Agreement, CONTRACTOR shall provide certificate(s) of insurance and endorsements, satisfactory to CITY, or otherwise provide proof of insurance as approved by the City Attorney, certifying that CONTRACTOR has and will maintain for the Agreement period, full worker's compensation insurance coverage as required by State laws, for all persons who are or may be employed in carrying out the work.

Concurrent with execution of this Agreement, CONTRACTOR shall provide to CITY certificate(s) of insurance and endorsements, satisfactory to CITY, or otherwise provide proof of insurance as approved by the City Attorney, certifying that CONTRACTOR has general liability and commercial vehicle liability insurance coverage naming CITY, City Council members, CITY'S engineer, and their consultants, officials, directors, officers, agents and employees, as additional insureds for both bodily injury and property damage of not less than that specified in Schedule A.

General liability and commercial vehicle liability insurance coverage shall include each of the following types of insurance as required by CITY to carry out this Agreement:

A. General Liability
   1. Comprehensive Form
   2. Premises-Operations
   3. Explosion and Collapse Hazard
   4. Underground Hazard
   5. Products/Completed Operations Hazard
   6. Contractual Insurance
   7. Broad Form Property Damage including Completed Operations
   8. Independent Contractors
   9. Personal Injury

B. Vehicle Liability
   1. Comprehensive Form, Including Loading and Unloading
   2. Owned
   3. Hired
   4. Non-owned

Concurrent with execution of any agreements between CONTRACTOR and any subcontractors retained by CONTRACTOR to perform any work required of CONTRACTOR hereunder, and in any event prior to CONTRACTOR authorizing any subcontractors to perform any such work or to even conduct any preliminary activities in preparation for or in anticipation of such work, CONTRACTOR shall collect certificates of insurance from all such subcontractors evidencing proof that all subcontractors have procured and will maintain all the insurance coverages required of CONTRACTOR under this Agreement.

In addition to naming the CITY, City Council members, CITY'S engineer, and their consultants, officials, directors, officers, agents and employees, as additional insureds, as set forth above, the

certificates of insurance, including those provided by any subcontractor, provided either on forms required by the CITY or as otherwise approved by the City Attorney, shall bear the following endorsements: (1) each policy required herein must be endorsed to provide that the policy shall not be cancelled or non-renewed by or reduced in coverage or limits (except by paid claims) unless the insurer has provided the CITY with thirty (30) days prior written notice of cancellation; (2) the carriers of all required insurance policies must waive all rights of subrogation against the CITY and its officers, employees, servants, volunteers, agents and independent contractors; and (3) except for worker's compensation insurance, all insurance policies required to be provided by CONTRACTOR must be endorsed to provide that the policies shall apply on a primary and noncontributing basis in relation to any insurance or self-insurance, primary or excess, maintained or available to the CITY, and its officers, employees, servants, volunteers, agents and independent contractors.

Nothing contained in these insurance requirements shall limit the liability of CONTRACTOR or CONTRACTOR's sureties. Review and acceptance of insurance certificates shall not constitute any representation by CITY or its representatives that any required insurance has been issued.

5. **CONTRACTOR'S LIABILITY:** CONTRACTOR shall, at CONTRACTOR'S sole cost and expense, be solely and completely responsible for all matters affecting the design, prosecution, progress and completion of the work (both on and off the job site). CONTRACTOR shall be responsible for observing all laws. CONTRACTOR shall provide for public convenience and safety and safety of workers, including CONTRACTOR'S workers and those of CONTRACTOR'S subcontractors, suppliers and others contributing to the work. CONTRACTOR shall protect CITY property and property rights of others, including the location, maintenance and replacement of utilities, whether shown on the plans or not. CONTRACTOR shall give prior notification to utility owners. CONTRACTOR shall notify Underground Service Alert at 1-800-422-4133 at least 48 hours prior to start of construction. CONTRACTOR shall protect against, and prevent drainage from, storm runoff. CONTRACTOR shall not interfere with easements, rights-of-way and encroachment permits. Nothing in this Agreement, the specifications, or other contract documents, or CITY'S approval of the plans and specifications or inspection of the work is intended to include CITY'S review, inspection, acknowledgment of or responsibility for any such matters. CITY, CITY COUNCIL members, ENGINEER, and their consultants and each of their officials, directors, officers, employees and agents shall have no responsibility or liability for the above.

6. **CONTRACTOR'S INDEMNIFICATION:** CONTRACTOR shall indemnify and hold harmless CITY, CITY COUNCIL members, ENGINEER, and their consultants and each of their officials, directors, officers, agents and employees from and against all liability, claims, damages, losses, expenses and other costs, including costs of defense and attorneys' fees arising out of or resulting from or in connection with all matters affecting the design or construction of the work, both on and off the job site, and during and after completion. This, provided any of the above is: (1) attributable to bodily injury, sickness, disease or death, or to injury to or destruction of property (other than the work itself) including the loss of use resulting therefrom, and (2) caused in whole or in part by any act or omission of CONTRACTOR, CONTRACTOR'S engineer, any subcontractor, any supplier, anyone directly or indirectly employed by any of them or anyone for whose acts or omissions any of them may be liable. All of this regardless of whether or not it is caused in part by any act or omission (active, passive or comparative negligence included) of a party indemnified hereunder. Said indemnification and agreement to hold harmless shall extend to injuries to persons and damages to or taking of property resulting from all matters affecting the design or construction of said improvements or the diversion of waters or from all matters affecting the design or construction or maintenance of drainage systems, streets and other improvements. Acceptance of these improvements by CITY shall not constitute an assumption by CITY of any responsibility for such damage or taking. As to any and all claims against the indemnified parties by any employee of CONTRACTOR, any contractor, any subcontractor, any supplier, anyone directly or indirectly employed by any of them or anyone for whose acts any of them may be liable, the indemnity obligations hereunder shall not be limited in any way by any limitation on the amount or type of damages, compensation or benefits payable by or for the CONTRACTOR, subcontractor, supplier or other person under workers' compensation acts, disability benefit acts or other employee acts.

   CONTRACTOR shall also indemnify and hold harmless CITY, CITY COUNCIL members, ENGINEER, and their consultants, and each of their officials, directors, officers, employees and agents from and against all losses, expenses, damages (including damages to the work itself), attorneys' fees and other costs, including costs of defense, which any of them may incur both during and after completion with respect to any latent deficiency in all matters affecting the design, specifications, surveying, planning, supervision, observation or construction of the improvements referred to herein or any injury to a person or property, real or personal, as a result of any such latent portions of the work which CITY reasonably suspects may also be defective by reason of known defects in the work or other work performed by CONTRACTOR or CONTRACTOR'S subcontractors, or suppliers or designed by their representatives. Provisions of this paragraph shall remain in effect ten (10) years following acceptance of improvements by the City. Nothing contained herein shall limit CITY'S remedies pursuant to Code of Civil Procedure, Section 337.15.

7. **SECURITY:** With the execution of this Agreement, unless otherwise indicated on Schedule A, CONTRACTOR shall furnish and deliver to CITY, at no expense to CITY, a payment bond and a performance bond. Each shall be in the amount of CITY-approved estimate specified on Schedule A. Bonds shall be furnished by surety companies satisfactory to CITY on the forms provided by CITY. No alterations or substitution of said forms shall be allowed. To be acceptable, surety companies must be authorized to do business and have an agent for service of process in California, be on the accredited list of the United States Treasury Department, and have an "A" policyholder's rating and a financial rating of Class V, or better, in accordance with the current Best's Rating. The bonds shall be limited to amounts acceptable to the Treasury Department.

   None of the following shall in any way affect the obligations of any surety. Each surety waives notice thereof: (a) any change, extension of time, alteration or additions to the terms of the Agreement, or the work to be performed, or the plans and specifications therefore; (b) any matters unknown to surety which might affect surety's risk, except that CITY shall advise surety upon request of the following: (1) any written claims it receives from unpaid subcontractors or suppliers, (2) any written orders received from other public authorities charging violations of laws, ordinances or regulations, and (3) failure of CONTRACTOR to comply with any written notice to correct defective work. The obligations of CONTRACTOR shall not be limited by the amount of such bonds.

8. **TYPES/AMOUNT OF SECURITY:** If specified in Schedule A, in lieu of payment and performance bonds, CONTRACTOR may furnish CITY either cash, a Letter of Credit, or an Agreement of Deposit as security for performance. Said security shall be in an amount not less than 100% of the cost estimate and, in addition, for payment of those furnishing materials, labor or equipment in an amount not less than 100% of the cost estimate. Said security agreements shall be on forms furnished by CITY. No alterations or substitution of said forms shall be allowed. The obligations of CONTRACTOR shall not be limited by the amount of the security required. No interest shall be paid CONTRACTOR on any cash deposit made pursuant to this paragraph.

9. **SUBSTITUTION OF SECURITIES:** In conformance with the State of California Public Contract Code, Part 5, Section 22300, CONTRACTOR may substitute securities for any monies withheld by the CITY to ensure performance under this Agreement.

At the request and expense of CONTRACTOR, CONTRACTOR has the option of establishing an escrow account with a state or federally chartered bank which shall serve as an escrow agent, for CONTRACTOR'S direct deposit of securities as a substitute for retention earnings required to be withheld by the CITY. Upon CONTRACTOR'S completion of its obligations hereunder, as evidenced by the CITY'S acceptance of the work pursuant to Section 11 hereof, the escrow agent shall return the securities to CONTRACTOR. The escrow agent shall notify the CITY within ten (10) days after deposit of the securities. The market value of the securities at the time of the substitution shall be at least equal to the cash amount then required to be withheld as retention. Securities shall be held in the name of the CITY and shall designate CONTRACTOR as the beneficial owner. Alternatively, on written request of CONTRACTOR, the CITY shall make payments of the retention earnings directly to the escrow account.

10. **PARTIAL UTILIZATION:** Until all work has been completed and accepted by CITY and all other public authorities having jurisdiction, CONTRACTOR shall be responsible for the care and maintenance of, or any damage to, the work. When the work or any portion of it is sufficiently complete to be utilized or placed into service, CITY shall have the right, upon written notification to CONTRACTOR, to utilize such portions of the work and to place the operable portions into service. With this notice and commencement of utilization or operation by CITY, CONTRACTOR shall be relieved of the duty of maintaining the portions so utilized or placed into operation. However, such use and operation shall not relieve CONTRACTOR of the full responsibility for completing the work in its entirety, for making good any defective work or materials, for protecting the work from damage, and for being responsible for damage and for the work as set forth herein. Nor shall such action by CITY be deemed completion and acceptance. Further, such action shall not relieve CONTRACTOR or CONTRACTOR'S sureties and insurers of the provisions hereof relating to indemnity and guarantees.

11. **ACCEPTANCE OF PROJECT - WARRANTY**: Acceptance of the work shall only be by action of the CITY COUNCIL. Neither the acceptance nor any prior inspections or failure to inspect shall constitute a waiver by CITY of any defects in the work. From and after acceptance, the work shall be owned and operated by CITY. As a condition to acceptance, CONTRACTOR shall certify to CITY in writing that all of the work has been performed in strict conformity with the Agreement and that all costs have been paid or supplied to CITY security, satisfactory to CITY, guaranteeing such performance. In addition to CONTRACTOR'S other obligations under the Agreement CONTRACTOR warrants all work and materials to be good quality and fit for the purpose and intended use. CONTRACTOR shall also repair, replace and restore any other work which is displaced in correcting defective work as well as other portions of the work which CITY by reason of such defects reasonably suspects may also be defective.

In the event of a failure to commence with the compliance of above-mentioned conditions within seven (7) calendar days after being notified in writing or failure to diligently pursue such compliance to completion, CITY is hereby authorized to proceed to have the defects repaired and made good at the expense of CONTRACTOR who hereby agrees to pay the cost and charges therefor immediately on demand.

If, in the opinion of CITY, nonconforming work creates a dangerous condition or requires immediate correction or repair to prevent further loss to CITY or to prevent interruption of operations, CITY shall attempt to give the CONTRACTOR notice. If CONTRACTOR cannot be contacted or does not comply with CITY'S request for correction within a reasonable time as determined by CITY, CITY may proceed to make such correction or provide such repair. The costs of such correction or repair shall be charged against CONTRACTOR, who agrees to make payment for said costs upon demand.

Corrective action by CITY will not relieve CONTRACTOR or CONTRACTOR'S sureties or insurers of the guarantees and indemnities of this Agreement.

This paragraph does not in any way limit CITY'S remedies pursuant to Code of Civil Procedure, Section 337 and 337.15, or the guarantee on any items for which a longer guarantee is specified or on any items for which a manufacturer or supplier gives a longer guarantee period. CONTRACTOR agrees to act as a co-guarantor with such manufacturer or supplier and shall furnish CITY all appropriate guarantees or warranty certificates upon completion of the project. No manufacturer's guarantee period shall in any way limit the liability of CONTRACTOR or CONTRACTOR'S sureties and insurers under the indemnity or insurance provisions of this Agreement.

12. **CONTRACTORS AND AGENTS**: CONTRACTOR shall be as fully responsible to CITY for the acts and omissions of CONTRACTOR'S subcontractor and of the persons directly or indirectly employed by CONTRACTOR'S subcontractor as CONTRACTOR is for the acts and omissions of persons directly or indirectly employed by CONTRACTOR. Nothing contained in the Agreement shall create any contractual relationship between any subcontractor or others and CITY. CONTRACTOR shall bind every contractor to be bound by the terms of this Agreement.

13. **DEFAULT BY CONTRACTOR**: CONTRACTOR shall be in default of this Agreement if: CONTRACTOR refuses or fails to prosecute the work or any separable part thereof with such diligence as will ensure its completion within the time specified herein, or any written extension thereof, or fails to complete such work within such time, or if CONTRACTOR should be adjudged a bankrupt, make a general assignment for the benefit of creditors, or if a receiver should be appointed on account of CONTRACTOR'S insolvency, or if CONTRACTOR or any of their subcontractors violate any of the provisions of this Agreement, or if CONTRACTOR fails to make prompt payment for materials or labor, or if CONTRACTOR disregards laws, ordinances, or instructions of CITY. CITY may thereafter serve written notice upon the CONTRACTOR and CONTRACTOR'S surety of its intention to declare this Agreement in default. Said notice shall contain the reasons for such intention to declare a default. Unless, within ten (10) days after the service of such notice, such violations shall cease and satisfactory arrangements for the corrections thereof be made, this Agreement shall upon the expiration of said time be in default.

Upon such default, CITY shall serve written notice thereof upon the surety and CONTRACTOR, and the surety shall have the right to take over and perform this Agreement. If the surety does not, within fifteen (15) days after the serving upon it of a notice of a default, give CITY written notice of its intention to take over and perform this Agreement or does not commence performance thereof within thirty (30) days from the date of CITY'S notice, CITY may take over the work and prosecute the same to the extent of completion it deems necessary by contract or by any other method it may deem advisable for the account and at the expense of CONTRACTOR, and the surety shall be liable to CITY for any cost or other damage occasioned CITY thereby. In such event CITY may, without liability for so doing, take possession of, and utilize in completing such work, such materials, appliances, plants, and other property belonging to CONTRACTOR that may be on the site of the work and be necessary therefor. Should surety fail to take over and diligently perform the Agreement upon CONTRACTOR'S default, surety agrees to promptly on demand deposit with CITY such amount as CITY may reasonably estimate as the cost of completing all of CONTRACTOR'S obligations. For any such work the CITY elects to complete by furnishing its own employees, materials, tools, and equipment, CITY shall receive reasonable compensation therefor including costs of supervision and overhead.

CITY may, at its option, elect not to complete any or all of the work and may elect not to accept any of the work already completed. If CITY elects not to accept any of the work, then all CITY'S obligations to CONTRACTOR and the lands to be served shall terminate. CITY'S obligations to CONTRACTOR and the lands to be served shall continue to the extent of any acceptance, subject to CITY'S right to offset any sums due the CITY.

The foregoing provisions are in addition to and not in limitation of any other rights or remedies available to CITY.

14. **DELAY BY CONTRACTOR**: If the work is suspended or otherwise not continuously prosecuted for any cause whatsoever, within or without the time for completion, CONTRACTOR shall, at CONTRACTOR'S sole cost and expense, remove and replace all or any portion of the work already completed and inspected which CITY, in its sole discretion, determines is or can be damaged.

15. **ATTORNEYS' FEES AND COSTS**: Should CITY engage an attorney to enforce any provision of this Agreement or to defend any claim brought by anyone arising out of the failure of CONTRACTOR to perform any of CONTRACTOR'S obligations under this Agreement, CONTRACTOR shall pay all of CITY'S attorneys' fees incurred in connection therewith, with or without suit, whether or not said attorney is in the regular employ of the CITY.

16. **PREVAILING WAGES**: CONTRACTOR and any subcontractor shall pay each employee engaged in the trade or occupation not less than the prevailing hourly wage rate. In accordance with the provisions of Section 1770 of the Labor Code, the Director of Department of Industrial Relations of the State of California has determined the general prevailing rates of wages and employer payments for health and welfare, pension, vacation, travel time, and subsistence pay as provided for in Labor Code Section 1773.8, apprenticeship or other training programs authorized by Labor Code Section 3093 and similar purposes applicable to the work to be done. Said wages are available through the Public Works Department, City of Rancho Mirage, 69825 Highway 111, Rancho Mirage, California, 92270 and from the California Department of Industrial Relations' Internet website at http://www.dir.ca.gov/dlsr/PWD/index.htm. CONTRACTOR performing the work under this Agreement shall obtain a copy of the wage rate determination and shall distribute copies to each subcontractor. As the wage determination for each craft reflects an expiration date, it shall be the prime CONTRACTOR and each subcontractor's responsibility to ensure that the prevailing wage rates of concern are current and paid to each employee. CONTRACTOR shall forfeit as penalty to the CITY, up to two hundred dollars ($200.00) for each laborer, workman or mechanic employed for each calendar day or portion thereof, if such laborer, workman or mechanic is paid less than the general prevailing rate of wages herein referred to and stipulated for any work done under the proposed contract, by him, or by any subcontractor under him, in violation of the provisions of the Labor Code, and in particular, Sections 1770 to 1781 inclusive. Any contract entered into pursuant to this notice will incorporate the provisions of the State Labor Code. Labor Code Section 1735 requires that no discrimination be made in the employment of persons upon public works because of race, religious creed, color, national origin, ancestry, physical disability, medical condition, marital status, or gender of such persons, except as provided in Government Code Section 12940. Affirmative action to ensure against discrimination in employment practice on the basis of race, color, national origin, ancestry, gender, or religion will also be required.

17. **ASSIGNMENT**: The performance of the Agreement may not be assigned except upon the written consent of CITY. Consent will not be given to any proposed assignment which would relieve CONTRACTOR or CONTRACTOR'S sureties of their responsibilities under the Agreement unless CITY finds that assignee can perform this Agreement and provide security comparable to that provided by CONTRACTOR.

18. **NOTICE**: All notices required hereunder shall be deemed served or given upon the earlier of actual receipt or deposit in the U.S. Postal Service, first class postage prepaid, addressed to CONTRACTOR

at the address set forth below, to the surety at the address in the security instrument, and to CITY at 69-825 Highway 111, Rancho Mirage, California 92270.

CITY OF RANCHO MIRAGE
STANDARD AGREEMENT FOR PUBLIC WORKS CONSTRUCTION
SIGNATURE REQUIREMENTS

(Limited Partnership/General Partnership/Corporation)

1 WHERE PRINCIPAL IS A LIMITED PARTNERSHIP

A. General Partner shall execute on behalf of the limited partnership.

B. General Partner shall furnish City of Rancho Mirage a copy of the recorded Certificate of Limited Partnership to authenticate the authority of the General Partner to sign on behalf of the limited partnership.

2 WHERE PRINCIPAL IS A GENERAL PARTNERSHIP

A. General Partner shall execute on behalf of general partnership.

B. General Partner shall furnish City of Rancho Mirage a copy of the General Partnership Agreement authenticating that the General Partner who signs the document has authority to do so.

3 WHERE PRINCIPAL IS A CORPORATION

A. Officers shall execute on behalf of corporation.

B. Officers shall furnish City of Rancho Mirage a copy of a corporate resolution indicating that the officers who sign the document are the officers of the corporation and authorized to bind the corporation to contract. Corporation requires two signatures.

In each of the foregoing situations (a limited partnership, a general partnership or a corporation) the CITY requires an individual obligor in addition to the partnership or corporate entity.

For example, John Doe may sign on behalf of either partnership or the corporation as the General Partner and/or president thereof, but then, in addition, John Doe is required to sign the document individually as an individual obligor.

By_____
(Authorized Representative of CITY) Date
Richard W. Kite, Mayor

Title: Mayor_____

APPROVED AS TO FORM:

By: _____
City Attorney

ATTEST:

By: _____
City Clerk

(SEAL IF CORPORATION)

By_____
(Authorized Representative of Corporation) Date

Title_____

Address:_____

_____

Telephone:_____

By_____
Individual Guarantor

_____
Address

_____

_____
Telephone No.

By_____
Individual Guarantor

_____
Address

_____

_____
Telephone No.

(SIGNATURES MUST BE NOTARIZED)

(Seal: Partnership/Corporation)

SCHEDULE A

STANDARD AGREEMENT FOR PUBLIC WORKS CONSTRUCTION

This schedule is attached to and made a part of the Standard Agreement for Construction of Public Improvements between CITY and CONTRACTOR for the above-referenced property.

1.Compensation: $_____

2.Completion Date: To be determined by Notice to Proceed
(90 calendar days Construction, plus 90 days Maintenance Period)

3. Liability Insurance Limits:

General Liability

$2,000,000	Each Occurrence (Includes Bodily Injury and Property Damage)
$1,000	Medical Expense
$1,000,000	Personal & Advertising Injury
$2,000,000	General Aggregate
$2,000,000	Products-Completed/Operations Aggregate

Automobile Liability

Combined Single Limit	$1,000,000 each accident, $2,000,000 in the aggregate

Workers Compensation	Statutory

4. Approved Security Amounts:
   a. Performance

   $_____

   b. Payment

   $_____

5.Bond Substitute Acceptable: Yes No (Cross out one)

6. Contractor(s):

Name and Address	License No.	Phase of Work

( ) Initial of CITY REPRESENTATIVE ( ) Initials of CONTRACTOR REPRESENTATIVE

LETTER OF CREDIT

CITY OF RANCHO MIRAGE
69-825 Highway 111
Rancho Mirage, CA 92270

Attention: Randal K. Bynder, City Manager

Reference: Irrevocable Letter of Credit No. _____

Gentlemen:

This Letter of Credit is given to fulfill the requirements of that certain agreement entered into between the City of Rancho Mirage, a political subdivision of the State of California, hereinafter referred to as "CITY," and

_____

hereinafter referred to as "Principal," covering certain improvements to be installed in that certain project known and designated as:

_____

As required by said agreement, and for that purpose only, we hereby establish in favor of CITY our Irrevocable Letter of Credit No._____ in the amount of _____ _____ U.S. dollars ($_____), to be paid by drafts at sight on us if accompanied by the following documents:

> CITY'S written statement (signed by the City Manager or City Attorney) certifying that there has been failure of the Principal to perform the above agreement. Said statement shall declare the amount of the sight draft on us and that the amount of this draft is, therefore, now due and payable.

IT IS AGREED that the above funds are on deposit and guaranteed for payment and said funds shall become trust funds for the purposes set forth herein as required by Section 66499.6 of the Government Code of the State of California.

Upon our receipt, from time to time, of a signed and dated certificate, in the form below, from the City of Rancho Mirage, the amount of this Letter of Credit will be reduced by the amount stated in such certificate. Said certificate must read as follows:

> Required improvement(s) has been performed in that certain project known and designated as _____. The amount and liability under Letter of Credit No. _____ is hereby reduced to $_____

All drafts under this Letter of Credit shall be marked:

Name of Bank_____

Address_____

_____

IRREVOCABLE LETTER OF CREDIT NO. _____

We expressly agree with you that all drafts drawn under and in compliance with the terms of this Letter of Credit shall meet with due honor upon representation. "Due honor" requires payment to CITY within three (3) banking days after presentation of demand.

This Letter of Credit shall be deemed automatically extended without amendment one year from the present and annually thereafter unless sixty (60) days prior to any such date bank shall notify City Clerk, by registered letter, that bank elects not to renew for such additional one year. In any event, this guaranteed Letter of Credit shall expire forty-five (45) days after CITY'S approval of the foregoing improvements, the recordation of the Notice of Acceptance and notification thereof to bank.

DATED: _____

Name of Bank_____

By: Authorizing Agent or Representative_____

APPROVED AS TO FORM:_____
City Attorney

Note: Letter must be submitted on bank letterhead with resolution or other documentation identifying signature as bank officer authorized to sign on behalf of bank.

PERFORMANCE BOND

We,_____, as Principal, and _____, as Surety, jointly and severally, firmly bind ourselves, our heirs, representatives, successors and assigns, as set forth herein, to the City of Rancho Mirage (“CITY“) for payment of the penal sum of:_____ _____ U.S. Dollars ($_____). CITY and Principal have entered into an agreement, or are about to enter into the agreement attached hereto and incorporated by reference, for the construction of public improvements for property referenced in said agreement. Surety herein approves of the terms and conditions of said agreement and binds itself to faithfully perform the obligations of Principal therein if Principal fails to so perform. Surety acknowledges that the agreement herein referenced shall be that document as executed by CITY and Principal.

THE CONDITION OF THIS OBLIGATION IS SUCH that if the Principal shall in all things stand to and abide by, and well and truly keep and perform all of the covenants, conditions, and provisions in said agreement, and any alteration thereof made as therein provided, on Principal's part to be kept and performed at the time and in the manner therein specified, and shall indemnify and save harmless the CITY, CITY'S engineer, and their consultants, and each of their officials, directors, officers, employees and agents, as therein stipulated, then this obligation shall become null and void; otherwise, it shall be and remain in full force and effect.

Surety agrees that should it fail to take over and diligently perform the agreement upon Principal's default after notice and within the time specified in the agreement, Surety will promptly on demand deposit with CITY such amount as CITY may reasonably estimate as the cost of completing all of Principal's obligations. Surety's obligation for payment herein shall extend, notwithstanding any controversy between Principal and CITY regarding Principal's failure under the agreement should be conclusively presumed between the parties herein to relieve, as demanded, Surety's obligations herein and shall be deemed proper payment as between Principal and Surety.

Surety agrees that no change, extension of time, alteration, or addition to the terms of the agreement, or the work to be performed thereunder or the plans and specifications, or any matters unknown to Surety which may affect Surety's risk shall in any wise affect its obligation on this bond, and it does thereby waive notice thereof.

Principal and Surety agree that if the CITY is required to engage the services of an attorney in connection with the enforcement of this bond, each shall pay CITY'S reasonable attorneys' fees incurred, with or without suit, in addition to the above sum.

Executed this _____day of _____, 20___.

Seal of Corporation

By_____
Authorized Representative of Principal

Title_____

By_____
Authorized Representative of Principal

Title_____

(ATTACH ACKNOWLEDGEMENT OF AUTHORIZED REPRESENTATIVES)
Any claims under this bond may be addressed to: (check one)

Surety's agent for service
of process in California:

_____
Name

_____
Street Number

_____
City and State

_____
Telephone Number

( )_____
Surety Company

_____
Street Number

_____
City and State

_____
Telephone Number

By_____
Attorney in Fact or other Representative

(ATTACH ACKNOWLEDGEMENT OF AUTHORIZED REPRESENTATIVE)

( )_____
Company Agent

_____
Street Number

_____
City and State

_____
Telephone Number

APPROVED AS TO FORM:

_____
City Attorney

Furnish the name, address and phone number of the company agent as well as the surety company. Sureties must be authorized to do business in and have an agent for service of process in California and be on the accredited list of the United States Treasury Department (their bonds will be limited to such amounts as would be acceptable to the Treasury Department), and otherwise meet the requirements of section 7 of the agreement.

(NOTICE: No substitution or revision of this bond form shall be accepted.)

PAYMENT BOND

We,_____, as Principal, and _____, as Surety, jointly and severally, firmly bind ourselves, our heirs, representatives, successors and assigns, as set forth herein, to the CITY OF RANCHO MIRAGE ("CITY") and those for whose benefit this bond insures in the sum of _____ _____U.S. Dollars ($ _____). CITY and Principal have entered into an agreement, or are about to enter into the agreement attached hereto and incorporated by reference, for the construction of public improvements for the property referenced in said agreement. Surety herein approves of the terms and conditions of said agreement and binds itself to faithfully perform the obligations of Principal therein if Principal fails to so perform. Surety acknowledges that the agreement herein referenced shall be that document as executed by CITY and Principal. If Principal or any of Principal's contractors or subcontractors, fails to pay any of the persons named in Title 15 of the California Civil Code employed in the performance of the agreement for materials furnished or for labor thereon of any kind, or for amounts due under the Unemployment Insurance Code with respect to such work or labor, then Surety shall pay the same in an amount not exceeding the sum specified above, and also shall pay, in case suit is brought upon this bond, such reasonable attorneys' fees as shall be fixed by the court.

Surety agrees that it shall pay the amounts due the persons above named and diligently perform the agreement upon Principal's default after notice and within the time specified in the agreement. If Surety fails to perform within the times specified in the agreement, Surety shall promptly on demand deposit with CITY such amount as CITY may reasonably estimate as the cost of completing all of Principal's obligations. Surety's obligation for payment herein shall extend, notwithstanding any controversy between Principal and CITY regarding Principal's failure under the agreement. Principal and Surety agree that any payment by Surety pursuant to this paragraph should be conclusively presumed between the parties herein to relieve, as demanded, Surety's obligation herein and shall be deemed proper payment as between Principal and Surety.

This bond shall insure to the benefit of any and all of the persons named in Title 15 of California Civil Code so as to give a right of action to them or their assigns in any suit brought upon this bond.

Surety agrees that no change, extension of time, alteration, or addition to the terms of the agreement, or the work to be performed thereunder, or the plans and specifications, or any matters unknown to Surety which might affect Surety's risk, shall in any way affect its obligation on this bond, and it does hereby waive notice thereof.

Principal and Surety agree that should CITY become a party to any action on this bond, that each will also pay CITY'S reasonable attorneys' fees incurred therein in addition to the above sums.

Executed this _____ day of _____, 20___.

Seal of Corporation

By_____
Authorized Representative of Principal
Title_____

(ATTACH ACKNOWLEDGEMENT)

By_____
Authorized Representative of Principal
Title_____

Any claims under this bond may be addressed to: (check one)

Surety's agent for service
of process in California:

_____
Name

_____
Street Number

_____
City and State

_____
Telephone Number

( )_____
Surety Company

_____
Street Number

_____
City and State

_____
Telephone Number

By_____
Attorney in Fact or other Representative

(ATTACH ACKNOWLEDGEMENT OF AUTHORIZED REPRESENTATIVE)

( )_____
Company Agent

_____
Street Number

_____
City and State

_____
Telephone Number

APPROVED AS TO FORM:

_____
CITY Attorney

Furnish the name, address and phone number of the company agent as well as the surety company.

Sureties must be authorized to do business in and have an agent for service of process in California and be on the accredited list of the United States Treasury Department (their bonds will be limited to such amounts as would be acceptable to the Treasury Department), and otherwise meet the requirements of section 7 of the agreement.

(NOTICE: No substitution or revision of this bond form shall be accepted.)

CERTIFICATE OF INSURANCE AND ENDORSEMENT

(LIABILITY)

Agreement with the CITY OF RANCHO MIRAGE, 69-825 Highway 111, Rancho Mirage, California 92270, for the construction of public improvements for the above reference property.

THIS IS TO CERTIFY that the following insurance policies have been issued to the named insured and are now in force with expiration date(s) and limits as stated below:

ISSUING COMPANY AND POLICY NUMBER	EXPIRATION DATE	LIMITS OF LIABILITY In Thousands (000)	Each Occurrence
		A. GENERAL LIABILITY	
		Bodily Injury	$
		Property Damage	$
		Bodily Injury and Property Damage Combined	$
		Personal Injury	$
		B. AUTOMOBILE LIABILITY	
		Bodily Injury (Each Person)	$
		Bodily Injury (Each Occurrence)	$
		Property Damage	$
		Bodily Injury and Property Damage Combined	$
		C. EXCESS LIABILITY	
		Bodily Injury and Property Damage Combined	$

The following types of coverage are included in said policies (indicated by "X" in space):

A) GENERAL LIABILITY

Comprehensive Form	Yes___	No___
Explosion and Collapse Hazard	Yes___	No___
Underground Hazard	Yes___	No___
Products/Completed Operations Hazard.....	Yes___	No___
Contractual Insurance.....	Yes___	No___
Broad Form Property Damage Including Completed Operations.....	Yes___	No___
Independent Contractors	Yes___	No___
Personal Injury.....	Yes___	No___

B) AUTOMOBILE LIABILITY

Comprehensive	Yes___	No___
Owned	Yes___	No___
Hired.....	Yes___	No___
Non-owned	Yes___	No___

C) EXCESS LIABILITY

Umbrella Form.....	Yes___	No___
Other Than Umbrella Form	Yes___	No___

ENDORSEMENT AS TO EACH POLICY

The CITY, CITY'S engineer and their consultants, and each of their officials, directors, officers, agents, and employees are included as additionally insured under each policy specified on pages 2 and 3 of the agreement but only while acting in their capacity as such and only as respects operations of the original named insureds, their contractors and subcontractors, any supplier, anyone directly or indirectly employed by any of them, or anyone for whose acts any one of them may be liable in the performance of the above-referenced agreement. The insurance afforded the additionally insured is primary insurance and the amount provided shall not be reduced or prorated by reason of any other insurance they may have.

The insurance shall not apply if the loss or damage is ultimately determined to be the proximate result of the sole and exclusive negligence (including any connected with the preparation or approval of maps, drawings, opinions, reports, surveys, designs, or specifications) of one or more of the aforesaid additionally insured.

The contractual coverages specified on pages 2 and 3 are sufficiently broad to insure all of the matters set forth in Section 4 of said agreement other than those matters set forth in the last paragraph thereof.

The insurance company will give at least 30 days' written notice by regular mail to the CITY prior to any material change or cancellation of its policy.

_____	_____
Named Insured	Insurance Company
_____	_____
Address	Address
_____	_____
City and State	City and State
Date_____	By_____ (Company Representative)
_____	_____
Insurance Company	Insurance Company
_____	_____
Address	Address
_____	_____
City and State	City and State
By_____ (Company Representative)	By_____ (Company Representative)

(SIGNATURES MUST BE NOTARIZED)

Insurance Company Agent For Service
of Process in California:

Name	CITY
Address	Street Number
City and State	City and State
Telephone Number	Telephone Number

IF MORE THAN ONE CITY, FURNISH CERTIFICATES OF INSURANCE AND ENDORSEMENTS BY EACH CITY FOR INSURANCE COMPANY IT REPRESENTS.

NOTICE: No substitution or revision of the above certificate will be accepted. To be acceptable, insurers must be authorized to do business and have an agent for service of process in California and have an "A" policyholder's rating and a financial rating of at least Class V, in accordance with the most current Best's Ratings.

CERTIFICATE OF INSURANCE AND ENDORSEMENT
(WORKERS COMPENSATION)

Agreement with the CITY OF RANCHO MIRAGE ("CITY"), 69-825 Highway 111, Rancho Mirage, California 92270, for construction of public improvements for the above-referenced property.

THIS IS TO CERTIFY that the below-named Company has issued the workers' compensation and employer's liability policy to the named insured and it is now in force at this time with expiration date as stated below.

The Company will give at least 30 days' written notice by regular mail to the CITY prior to any material change or cancellation of the policy. The policy is so endorsed.

POLICY NUMBER	EXPIRATION DATE	LIMITS OF LIABILITY Statutory Limits Under the Laws of the State of California

Named Insured	Insurance Company
Address	Address
City and State	City and State
Date_____	By_____ (Company Representative)

(SIGNATURE MUST BE NOTARIZED)

Insurance Company Agent For Service
of Process in California:

Name	CITY
Address	Street Number
City and State	City and State
Telephone Number	Telephone Number

NOTICE: No substitution or revision of the above certificate will be accepted. To be acceptable, insurers must be authorized to do business and have an agent for service of process in California.

CERTIFICATE OF COMPLETION OF STANDARD AGREEMENT FOR PUBLIC WORKS CONSTRUCTION

To induce the CITY OF RANCHO MIRAGE ("CITY") to accept all the work under the above dated Standard Agreement for Public Works Construction between CITY and CONTRACTOR, CONTRACTOR represents and certifies to CITY as follows:

1 All the work described in said agreement has been fully and completely performed in strict conformity with the agreement; and,

2. Except for final payments due CONTRACTOR or subcontractors which are contingent upon CITY'S acceptance, all transportation, equipment, labor, service, permits, utilities, and all other items used in completing the work have been fully paid for.

CONTRACTOR:_____ _____
(Name) (Phase of Work)

_____ _____ _____
(Date) (Authorized Representative) (Title)

CONTRACTOR:_____ _____
(Name) (Phase of Work)

_____ _____ _____
(Date) (Authorized Representative) (Title)

CONTRACTOR:_____ _____
(Name) (Phase of Work)

_____ _____ _____
(Date) (Authorized Representative) (Title)

CONTRACTOR:_____ _____
(Name) (Phase of Work)

_____ _____ _____
(Date) (Authorized Representative) (Title)

CONTRACTOR:_____ _____
(Name) (Phase of Work)

_____ _____ _____
(Date) (Authorized Representative) (Title)

Recording Requested By And
When Recorded Mail to:

CITY OF RANCHO MIRAGE
69-825 Highway 111
Rancho Mirage, CA 92270
No fee

NOTICE OF ACCEPTANCE

Notice is hereby given that the following public improvements have been completed and accepted by the CITY COUNCIL of the City of Rancho Mirage on _____, 20___.

_____
(Brief description of improvements)

_____
(General location)

_____ Rancho Mirage, California,

_____
(Owner of property)

_____
(Contractor(s))

This Notice of Acceptance is executed under authority of a directive from the City Council of the City of Rancho Mirage.

I,_____, declare under the penalty of perjury that I am the _____of the City of Rancho Mirage, that I am familiar with the facts stated in the foregoing Notice of Acceptance executed for and on its behalf, and that I have read the foregoing Notice of Acceptance and know the contents thereof to be true.

DATED:_____, 20___.

(SIGNATURES MUST BE NOTARIZED)

_____

_____
Title

SECTION 00700-A

INDEX OF GENERAL PROVISIONS

ARTICLE ..... **PAGE NO.**

1. Scope of Work 00700-1
2. Location of Work 00700-1
3. Time For Completion 00700-1
4. Traffic Requirements 00700-1
5. Correlation and Intent of Documents 00700-1
6. Detail Drawings and Instructions 00700-1
7. No Oral Agreements 00700-1
8. Shop Drawings 00700-2
9. Drawings and Specifications 00700-2
10. Materials, Workmanship 00700-2
11. Defective Work and Materials 00700-2
12. Substitutions of Materials and Equipment 00700-2
13. Contractor's Title To Materials 00700-2
14. Licenses, Permits, Laws, and Regulations 00700-3
15. Patents, Royalties, and Taxes 00700-3
16. Engineering, Survey, and Site Examination 00700-3
17. Protection of Work and Property 00700-3
18. Accident Prevention 00700-3
19. Emergencies 00700-3
20. Access To The Work 00700-4
21. Inspection of The Work 00700-4
22. Inspector 00700-4
23. Supervision of Contractor 00700-4
24. Changes in The Work 00700-4
25. Delays 00700-5
26. Time Extensions 00700-5
27. Temporary Suspension of Work 00700-6
28. Owner's Right To Do Work 00700-7
29. Owner's Right To Terminate The Contract 00700-7
30. Contractor's Right To Terminate The Contract 00700-7
31. Payments Withheld 00700-7
32. Liens 00700-8
33. Assignments 00700-8
34. Mutual Responsibility Of Contractors 00700-8

35. Separate Contracts 00700-8
36. Subcontracts 00700-8
37. Use of Work Area and Cleaning 00700-9
38. Correction of Work After Final Payment & Guarantee 1 Year 00700-9
39. Occupancy By The Owner 00700-9
40. Damage To Adjacent and Existing Property 00700-9
41. Utilities 00700-9
42. Temporary Toilet 00700-9
43. Climatic Conditions 00700-9
44. Laws Concerning the Owner A Part Hereof 00700-9
45. Wages & Hours 00700-9
46. Brand or Trade Name Substitution or “Equals” 00700-10
47. Notice of Completion 00700-10
48. Equal Opportunity Clause 00700-10
49. Progress Schedule 00700-10
50. Pre-construction Conference 00700-11

SECTION 00700

GENERAL PROVISIONS OF THE CONTRACT

1. **SCOPE OF WORK**

The work to be done consists of furnishing all materials, equipment, tools labor and incidentals as required by the contract documents to construct the above stated project.

The general items of work to be done hereunder consist of demo work, landscaping irrigation, plants, landscape lighting, as well as all other appurtenant or related work as shown or referenced on the plans.

2. **LOCATION OF WORK**

The general location and limits of the work is: As defined in the construction documents including the plans and these specifications.

3. **TIME FOR COMPLETION**

Time is of the essence, therefore, the CONTRACTOR shall prioritize and schedule the work to be completed within the time specified in the Notice to Proceed and as set forth in Paragraph C.3 of the Standard Agreement, Section 00312-2, “Time For Completion”, and shall be initiated as follows:

All long lead delivery time items shall be ordered immediately upon award of the contract. Vendor delivery date commitments shall be provided to the City of Rancho Mirage.

The Contractor shall determine the exact location of all existing utilities prior to commencing work. In the event the Contractor encounters underground utilities not shown on the plans, he/she shall verify the exact location of the utility and immediately notify the Engineer.

4. **TRAFFIC REQUIREMENTS**

Delineation shall be in accordance with the California Department of Transportation California Manual on Traffic Control Devices, 2012 Edition (California MUTCD), The Contractor shall submit a detailed construction detour plan consistent for Agency review and approval for each stage of construction prior to start of construction.

5. **CORRELATION AND INTENT OF DOCUMENTS**

The Standard Specifications for Public Works Construction (Green Book), 2012 Edition, project plans, special provisions, contract change orders, and all supplementary documents are essential parts of the contract, and a requirement occurring in one is as binding as though occurring in all. They are intended to be complimentary, and to describe and provide for a complete work.

Project Plans shall govern over Standard Plans; Standard Plans and Project Plans shall govern over the Standard Specifications; the Project Special Provisions shall govern over the Project Plans, Standard Specifications, and Standard Plans.

6. **DETAIL DRAWINGS AND INSTRUCTIONS**. The Engineer will furnish to the Contractor, with reasonable promptness, such further detail explanations, instructions and Drawings as may be necessary for the proper execution of the Work. In giving such additional instructions, the Engineer shall have authority to make minor changes in the Work, not involving extra cost, and not inconsistent with the intent of the Drawings and Specifications or the purposes of the improvement. The Contractor shall conform to the intent of the Contract, Drawings and Specifications. The Contractor shall not proceed with any portion of the work unless he is in possession of Plans and information necessary to its proper execution and completion.

The execution of the work as specifically detailed or explained without a written Change Order signed by the Owner and the Engineer, shall constitute an acceptance by the Contractor of detailed Drawings or information as being in conformity with the original intent of the Contract Documents.

7. **NO ORAL AGREEMENTS**. No oral agreement or conversation with any officer, agent, or employee of the Owner, either before or after execution of the Contract, shall affect or modify any of the terms or obligations contained in any of the documents comprising said Contract.

8. **SHOP DRAWINGS**

A. If applicable, the Contractor shall submit for the approval of the Engineer shop, fabrication and setting drawings required by the Specifications or that may be requested by the Engineer, and no work shall be fabricated by the Contractor, except at his own risk, until such approval has been given.

B. Drawings shall be submitted in quadruplicate accompanied by letter or transmittal which shall give a list of the numbers and dates of the drawings submitted. Drawings shall be complete in every respect and bound in sets.

C. The Drawings submitted shall be marked with the name of the project, numbered consecutively and bear the approval of the Contractor as evidence that the Drawings submitted without this approval will be returned to the Contractor for re-submission.

D. The Contractor shall submit all Drawings and schedules sufficiently in advance of construction requirements to allow ample time for checking, correcting, resubmitting and rechecking.

If the shop drawings show variations from the requirements of the Contract because of standard shop practice or other reasons, the Contractor shall make specific mention of such variations in his letter of transmittal in order that, if acceptable, suitable action may be taken for proper adjustment; otherwise, the Contractor will not be relieved of the responsibility for executing the work in accordance with the Contract even though such shop drawings have been approved.

E. If a Drawing as submitted indicates a departure from the Contract requirements which the Engineer finds to be in the interest of the Owner and to be so minor as not to involve a change in the Contract price or time for performance, he may approve the Drawings.

F. The approval of shop and setting drawings will be general and, except as provided above, shall not be construed: (1) as permitting any departure from the Contract requirements; (2) as relieving the Contractor of the responsibility of any error in details, dimensions or otherwise that may exist; (3) as approving departures from additional details or instructions previously furnished by the Engineer.

9. **DRAWINGS AND SPECIFICATIONS**. The Contractor shall keep on the work site a complete copy of the Drawings and Specifications, including all authorized Change Orders, in good condition, which shall always be available to the Owner, Engineer, and their representatives.

All Drawings, Specifications and copies thereof furnished to the Contractor are the property of the Owner and shall not be used on other work without its consent. Upon completion of this project, all copies of the Drawings and specifications shall be returned to the Engineer, as agent of the Owner.

10. **MATERIALS, WORKMANSHIP**. All materials used in the project, unless otherwise specified, shall be new, of the types and grades specified, and the Contractor shall, if requested, furnish evidence satisfactory to the Engineer that such is the case. All workmanship shall be of the best quality and all workers shall be adequately skilled in the work which they perform.

11. **DEFECTIVE WORK AND MATERIALS**. The Contractor shall promptly remove from the premises all materials condemned by the Owner, the Contractor shall promptly replace and re-execute his work in accordance with the Contract and shall perform that work without expense to the Owner and shall bear the expense of making good all work of other Contractors destroyed or damaged by such removal or replacement. If the Engineer and Owner deem it expedient to correct work injured or done not in accordance with the Contract, the difference in value together with a fair allowance for damage shall be deducted from the sum agreed to be paid the Contractor for the performance of the Contract.

12. **SUBSTITUTIONS OF MATERIALS AND EQUIPMENT**. Materials and equipment, including specially designated makes, must be furnished as specified except when equals are approved by the Owner. Equals will not be accepted unless the Contractor requests and receives permission in writing from the Owner to make specific substitutions. Requests shall be made within sufficient time to allow the Owner to investigate the merits of the proposed substitutes, and the Contractor shall present complete details with specific explanations of the characteristics of those details, which differ, from the Specifications.

13. **CONTRACTOR'S TITLE TO MATERIALS**. No materials or supplies for the work shall be purchased by the Contractor or by any subcontractor subject to any chattel mortgage or under a conditional sale or other

agreement by which an interest is retained by the seller. The Contractor warrants that he has good title to all materials and supplies for which he accepts partial payment.

14. **LICENSES, PERMITS, LAWS AND REGULATIONS**. The contractor, acting in the name of the Owner, shall obtain and pay, only where legally required, for all licenses and permits, inspections and inspection certificates, required to be obtained from or made by any authority having jurisdiction over any part of the work included in the Contract. The Contractor shall comply with all laws, ordinances and regulations applicable to the work.

15. **PATENTS, ROYALTIES AND TAXES**. The Contractor shall hold the Owner and the Engineer harmless from liability of any nature, including costs and expenses, for or on account of any patented or unpatented article, appliance, or device used in the performance of the Contract and shall defend all suits or claims for infringement of any patent right. He shall pay all applicable Federal, State and local sales taxes and all other taxes pertinent to the work involved in this Contract.

16. **ENGINEERING, SURVEY AND SITE EXAMINATION**. The Contractor shall be responsible for having ascertained pertinent local conditions such as location, accessibility and general character of the site and for having satisfied himself as to the conditions under which the work is to be performed. No claim for allowances because of his error or negligence in acquainting himself with the conditions at this site will be recognized.

The Owner will furnish surveys necessary to properly locate the improvements and establish the locations thereof, with general reference points as well, that in the Owner's judgment enable the Contractor to proceed with the work.

The Contractor shall provide competent engineering services to lay out the work and all parts thereof and to establish all grades and elevations in accordance with the Contract requirements. He shall verify the figures shown on the survey cut sheets, field stakes and the approved drawings before undertaking any construction work and shall be responsible for the accuracy of the finished work.

The Contractor shall protect and preserve established bench marks and monuments and shall make no changes in locations without the written approval of the Owner. Any bench marks or monuments which are lost or destroyed shall be replaced by a licensed land surveyor at the full expense of the Contractor subsequent to proper notification of the Owner and with his approval.

Any ties, monuments and bench marks disturbed during construction shall be reset by a Licensed Land Surveyor per City and County standards after construction and the tie notes submitted to the City on 8-1/2" x 11" heavy stock grid-lined survey record paper. The tie record shall be signed by the Licensed Surveyor and a corner record shall be filed with the County of Riverside at the Contractor's expense. The Contractor and his sureties shall be liable for, at his expense, any resurvey required due to his negligence in protecting existing ties, monuments, bench marks or any such horizontal or vertical controls.

17. **PROTECTION OF WORK AND PROPERTY**. The Contractor shall at all times safely guard the Owner's property from injury or loss in connection with this Contract. He shall at all times safely guard and protect his own work and adjacent property from damage. All passageways, guard fences, lights and other facilities required for protection by State of municipal laws and regulations and local conditions shall be provided and maintained. Existing pavements located on or near the site shall be protected against damage, and pavements that are accidentally damaged or necessarily cut shall be replaced with the same material upon completion of the work.

18. **ACCIDENT PREVENTION**. Precaution shall be exercised at all times for the protection of persons, including employees, and property. The safety provisions of applicable laws, building and construction codes shall be observed. The Contractor shall maintain sufficient safeguards, such as railings, temporary walks, lights, etc., against the occurrence of accidents, injuries, damage or harm to any person or property and shall also be responsible for the same if such occur.

19. **EMERGENCIES.** In an emergency affecting the safety of life or of any structure or of adjoining property, the Contractor shall take all necessary and proper steps to prevent any threatened loss or injury. If practicable, the Contractor shall communicate with the Owner and shall be guided by the directions and advice of the Owner. But if the character of the emergency is such as to require action with such short limits or time or under circumstances rendering that impracticable, then the Contractor shall act independently and upon his own

responsibility, subject to the direction and control of the Owner as soon as it may become practicable to obtain the same.

20. **ACCESS TO THE WORK**. The Engineer, the Owner, and their representatives shall have access at all times to the work for purposes of inspection, wherever said work is in preparation or progress, and the Contractor shall provide proper facilities for such access and inspection.

21. **INSPECTION OF THE WORK**. All material and workmanship (if not otherwise designated by the Specifications) shall be subject to inspection, examination, and test by the Engineer at any all times during manufacture and/or construction and at any and all places where such manufacture and/or construction are carried on. The Engineer shall have the right to reject defective material and workmanship or require its correction. Should the Specifications, the Engineer's instructions, any law, ordinances or public authority require any work to be specially tested or approved, the Contractor shall give the Engineer timely notice of its readiness for inspection, and if the inspection is by an authority other than the Engineer, of the date fixed for such inspection. If any work should be covered, without proper inspection and without approval or consent of the Engineer, it shall, if required by the Engineer, be uncovered for examination at the Contractor's expense.

22. **INSPECTOR**. The Owner may employ an Inspector, who will act as a direct representative of the Owner or the Engineer, and who shall provide full-time and continuous personal supervision and inspection of the work. Such supervision and inspection shall not, in any way relieve the Contractor from responsibility for full compliance with all of the terms and conditions of the Contract, nor be construed to lessen to any degree, the Contractor's responsibility for providing efficient and capable superintendence as required herein. The Inspector is not authorized to make changes in the Drawings or Specifications, nor shall his approval of work and methods relieve the Contractor of responsibility for the correction of subsequently discovered defects.

No work of any kind shall be performed on the project site outside of the regularly established working hours without the knowledge and consent of the Inspector.

23. **SUPERVISION OF CONTRACTOR**

The CONTRACTOR shall give his personal attention constantly to the faithful prosecution of the work, and shall be present, either in person or be represented by a duly authorized and competent SUPERINTENDENT satisfactory to the ENGINEER, continually at the site of the work during progress, to receive directions or instructions from the OWNER. The SUPERINTENDENT shall be qualified to, and shall, represent the CONTRACTOR during all times when the CONTRACTOR is not present and all orders or directions issued to the SUPERINTENDENT by the OWNER shall be as binding as if given to the CONTRACTOR personally. Important directions shall be confirmed in writing to the CONTRACTOR. Other directions shall be so confirmed upon written request in each case. The CONTRACTOR shall designate the Project SUPERINTENDENT in writing to the CITY and obtain ENGINEER approval prior to the start of construction. Both the CONTRACTOR and the SUPERINTENDENT shall cooperate to provide efficient and complete supervision over all phases of the work.

24. **CHANGES IN THE WORK**. The Owner, upon agreement with the Contractor, without invalidating the Contract, may order extra work or make changes by altering, adding to, or deducting from the work, the Contract sum being adjusted accordingly. The Contractor shall not be authorized to comply with such order without previously obtaining written authority therefore from the Owner. All such work shall be executed under the conditions of the original Contract, except that any claims for extension of time caused thereby shall be adjusted at the time of ordering such change.

The Contractor shall, when requested by the Owner, furnish an itemized breakdown of the quantities and prices used in computing the value of any change that may be ordered. If in the opinion of the Contractor any instructions, detail Drawings or notices of any description issued by the Engineer or Owner involve extra cost above the Contract price he shall immediately give the Owner written notice to that effect before proceeding with the work involved. The execution of work without prior submission of such written notice shall constitute the contractor's acceptance of the work as being within the Contract price.

The Contractor agrees that any change orders for extra work represent an accord and satisfaction between the owner and Contractor for such extra work. The Contractor's change order shall contain the entire claim of Contractor for all such extra work, including but not limited to claims for delay, disruption, and acceleration damages. Contractor waives any further claim for costs and damages except as specifically set forth in the change order.

25. DELAYS

25.1 **Notice of Delays** – When the CONTRACTOR foresees a delay in the prosecution of the Work and, in any event, immediately upon the occurrence of a delay, the CONTRACTOR shall notify the ENGINEER in writing of the probability of the occurrence and the estimated extent of the delay, and its cause. The CONTRACTOR agrees that no claim shall be made for delays, which are not called to the attention of the ENGINEER at the time of their occurrence.

25.2 **Avoidable Delays** – Avoidable delays in the prosecution of the Work shall include delays, which could have been avoided by the exercise of care, prudence, foresight and diligence on the part of the CONTRACTOR or its subcontractors, at any tier level, or suppliers.

25.3 **Unavoidable Delays** – Unavoidable delays in the prosecution or completion of the Work shall include delays which result from causes beyond the control of the CONTRACTOR and which could not have been avoided by the exercise of care, prudence, foresight and diligence on the part of the Contractor or his subcontractors, at any tier level, or suppliers.

Delays in completion of the Work of other Contractors employed by the CITY will be considered unavoidable delays insofar as they interfere with the CONTRACTOR's completion of the current critical activity or item of the Work.

25.4 **Abnormal Delays** – Delays caused by acts of God, fire, unusual storms, floods, tidal waves, earthquakes, strikes, labor disputes, freight embargoes, and shortages of materials shall be considered as unavoidable delays insofar as they prevent the CONTRACTOR from proceeding with at least seventy-five (75) percent of the normal labor and equipment force for at least five (5) hours per day toward completion of the current critical activity item on the favorably reviewed progress schedule.

25.5 **Material Shortages** – Upon the submission of satisfactory proof to the ENGINEER by the CONTRACTOR, a shortage of materials outside the control of the CONTRACTOR will be acceptable as grounds for granting a time extension. In order that such proof may be satisfactory and acceptable to the ENGINEER, it must be demonstrated by the CONTRACTOR that the CONTRACTOR has made every effort to obtain such materials from all known sources within reasonable reach of the proposed Work and was not due to a lack of scheduling or planning on the CONTRACTOR's part.

Only the physical shortage of material caused by unusual circumstances will be considered under these provisions as a cause for Extension of Time, and no consideration will be given to any claim that material could not be obtained at a reasonable, practical, or economical cost or price, unless it is shown to the satisfaction of the ENGINEER that such material could have been obtained only at exorbitant prices entirely out of line with current rates, taking into account the quantities involved and usual practices in obtaining such quantities. A time extension for shortage of materials will not be considered for material ordered or delivered late or whole availability is affected by virtue of the mishandling of procurement. The above provisions apply equally to equipment to be installed in the Work.

26. TIME EXTENSIONS

26.1 **Avoidable Delay** – The AGENCY may grant an Extension of Time for avoidable delays if the AGENCY deems it is in its best interest. If the AGENCY grants an Extension of Time for avoidable delays, the CONTRACTOR agrees to pay the AGENCY's actual costs, including changes for engineering, inspection and administration incurred during the extension.

26.1.A **Unavoidable Delay** – If the CONTRACTOR is delayed in the performance of its work by an act of the CITY or if the CONTRACTOR is delayed in the performance of its work by an unavoidable delay, then the Contract completion date may be extended by the CITY for such time that, in the AGENCY's and ENGINEER's opinion, the CONTRACTOR's completion date will be unavoidably delayed, provided that the CONTRACTOR strictly fulfills the following:

a. The CONTRACTOR shall provide notification in accordance with Section 25.1 **Notice of Delays** and submit in writing a request for an Extension of Time to the ENGINEER stating at a minimum the probable cause of the delay and the number of days being requested. The time extension request shall be submitted along with a time impact analysis.

b. If requested by the ENGINEER, the CONTRACTOR shall promptly provide sufficient information to the ENGINEER to assess the cause or effect of the alleged delay, or to determine if other concurrent delays affected the work.

c. Weather Delays. The CONTRACTOR will be granted a non-compensable time extension for weather-caused delays.

Should the CONTRACTOR fail to fulfill any of the foregoing, which are considered conditions precedent to the right to receive a Time Extension, the CONTRACTOR waives the right to receive a time extension.

Should the CONTRACTOR fail to complete the work within the time specified in the contract, as extended in accordance with this clause if appropriate, the CONTRACTOR shall pay to the AGENCY liquidated damages as specified in the Special Provisions of these specifications.

During such extension of time, neither extra compensation for engineering, inspection and administration, nor damages for delay will be charged to the CONTRACTOR. It is understood and agreed by the CONTRACTOR and AGENCY that time extensions due to unavoidable delays will be granted only if such unavoidable delays involve controlling operations which would prevent completion of the whole Work within the specified Contract Time.

26.1.B **Indirect Overhead** – The CONTRACTOR shall be reimbursed for indirect overhead expenses for periods of time when the Work is stopped due to Unavoidable Delays as defined in Section 25.3, of these General Conditions. However, no reimbursement for indirect overhead shall be made for delays as defined in Section 25.4 Abnormal Delays; Section 26.2.c. Weather Delays; or Section 25.5, Material Shortages of these General Conditions.

As a condition precedent to any reimbursement, the CONTRACTOR must fulfill all conditions as provided Section 26.2, Unavoidable Delay.

The reimbursement of indirect overhead is limited to those delay conditions defined above when the CONTRACTOR is prevented from proceeding with seventy-five (75) percent of the normal labor and equipment force for at least five (5) hours per day toward completion of the current critical activity item(s) on the current favorably reviewed progress schedule.

26.1.C **Indirect Field Overhead** – For those allowable delay periods as defined in Section 25.3 of these General Conditions, the CONTRACTOR shall be reimbursed for its indirect field overhead based on:

a. Invoices for all field office equipment.
b. Actual salary for field office staff.
c. Fair rental values acceptable to the ENGINEER for construction equipment idled due to the delay.

26.1.D **Home Office Overhead** – For those allowable delay periods as defined in Section 25.3, Unavoidable Delays, the CONTRACTOR shall be reimbursed for its home office overhead based on the following formula:

Contract Bid price divided by Contract Period Calendar Days x 0.03 = Daily Home Office Overhead ($/Day).

Such reimbursement shall be mutually agreed between the AGENCY and CONTRACTOR to encompass full payment for any home office overhead expenses for such periods of time for the CONTRACTOR and all subcontractors. The CONTRACTOR agrees to hold the AGENCY harmless for any indirect overhead claims from its subcontractors.

27. **TEMPORARY SUSPENSION OF WORK.** If the Contractor fails to correct defective work as required, or fails to carry out the work in accordance with the Contract Documents or any other applicable rules and regulations, the City, by a written order of the City's Engineer or a representative specifically empowered to do so, may order the Contractor to stop the work, or any portion thereof, until the cause for such order has been eliminated. However, this right of the City to stop the work shall not give rise to any duty on the part of the City to exercise this right for the benefit of the Contractor or any other person or entity. All delays in the work occasioned by such stoppage shall not relieve the Contractor of any duty to perform the work or serve to extend the time for its completion. Any and all necessary corrective work done in order to comply with the Contract Documents shall be performed at no cost to the City.

In the event that a Suspension of Work is ordered, as provided in this paragraph, the Contractor, at its expense, shall perform all work necessary to provide a safe, smooth an unobstructed passageway through construction for use by public, pedestrian and vehicular traffic during the period of such use by suspension. Should the contractor fail to perform the work as specified, the City may perform such work and the cost thereof may be deducted from monies due the Contractor under the Contract.

The City shall also have authority to suspend the work wholly or in part, for such period as the City may deem necessary, due to unsuitable weather, or to such other conditions as are considered unfavorable for the suitable prosecution of the work. Such temporary suspension of the work will be considered justification for time extensions to the contract in an amount equal to the period of such suspension. The contractor as directed by the City shall provide the provisions as stipulated in Section 26.2, Unavoidable Delay, above. Such additional work shall be compensated as provided for in Section 24, Changes In The Work.

28. **OWNER'S RIGHT TO DO WORK.** Should the Contractor, at any time during the process of construction, fail or refuse to furnish enough materials and/or workers to properly prosecute the work, unless prohibited from so doing though the action of the Owner, the Engineer, or other authorized official agencies, the Owner, after giving two (2) days written notice to the Contractor may, without prejudice to any other rights he may have, proceed with and/or complete the work, and may deduct the cost thereof, together with reasonable expenses arising from such procedure, from any amounts then due or which may thereafter become due to the Contractor.

29. **OWNER'S RIGHT TO TERMINATE THE CONTRACT**. If the Contractor should be adjudged a bankruptcy, or if he should make a general assignment for the benefit of his creditors, or if a receiver should be appointed on account of his insolvency, if he should, except in cases stated in the following paragraph, persistently or repeatedly refuse or fail to supply enough properly skilled workers or proper materials, or if he should fail to make prompt payment to subcontractors or for materials or labor, persistently disregard laws, ordinances or the instruction of the Owner, or otherwise be guilty of a substantial violation of any provision of the Contract, then the Owner, upon certificate of the Engineer that sufficient cause exists to justify such action, may, without prejudice to any other right or remedy after giving the Contractor ten (10) days written notice, terminate the employment of the Contractor and take possession of the premises and of all materials, tools, and appliances thereon and finish the work by whatever he may deem expedient. In such case, the Contractor shall not be entitled to receive any further payment until the work is finished. If the unpaid balance of the contract price shall exceed the expense of finishing the work including compensation to the Engineer for his additional services, such excess shall be paid to the Contractor. If such expense shall exceed such unpaid balance, the Contractor shall pay the difference to the Owner.

30. **CONTRACTOR'S RIGHT TO TERMINATE THE CONTRACT**. If through no fault of the Contractor, or of anyone employed by him (1) the work is stopped by order of any court or governmental authority, other than the Owner, (2) the Engineer capriciously or arbitrarily fails to issue any certificate for payment within thirty (30) days after it is due, or (3) the Owner fails to pay to the Contractor, within sixty (60) days after presentation of the Engineer's certificate to the Owner, any sum certified by the Engineer, then the Contractor may upon ten (10) days written notice to the Owner and the Engineer stop work or terminate the Contract, and the Owner shall be liable to the Contractor for any loss sustained and reasonable profit.

31. **PAYMENTS WITHHELD**. The Engineer may withhold or, on account of subsequent discovered evidence, nullify the whole or a part of any certificate for payment to such extent as may be necessary to protect the Owner from loss on account of:

A. Defective work not remedied.

B. Claims filed, or reasonable evidence indicating probable filing of claims.

C. Failure of the Contractor to make payments properly to subcontractor or for material or labor.

D. A reasonable doubt that the Contract can be completed for the balance remaining unpaid.

E. Damage to another Contractor.

F. Default of the Contractor in the performance of the terms of the Contract.

32. **LIENS.** The Contractor agrees that at any time upon request of either the Owner or the Engineer, he will submit a sworn statement setting forth the work performed or material furnished by subcontractors and material suppliers, and the amount due and to become due to each, and that before the final payment called for hereunder he will, if requested, submit to the Owner or the Engineer a complete set of vouchers showing what payments have been made for materials and labor used in connection with the work.

33. **ASSIGNMENTS**. The Contractor shall not assign the whole or any part of this Contract without the written consent of the Owner and all Sureties executing bonds on behalf of the Contractor in connection with said Contract.

34. **MUTUAL RESPONSIBILITY OF CONTRACTORS.** If the Contractor or any of his subcontractors or employees cause loss or damage to any separate Contract on the work, the Contractor agrees to settle with such separate Contractor by agreement or arbitration, if he will so settle. If such separate Contractor sues the Owner, on account of any loss so sustained, the Owner shall notify the Contractor, who shall indemnify and save harmless the Owner against any expenses and judgment arising therefrom.

35. **SEPARATE CONTRACTS.** The Owner reserves the right to award other contracts in connection with the project and the work, under which may proceed simultaneously with the execution of this Contract. The Contractor shall coordinate operations with those of other Contractors. Cooperation will be required in the arrangement for the storage of materials, and in the detailed execution of the work. The Contractor, including his subcontractors, shall keep himself informed of the progress and the detail work of other Contractors and shall notify the Engineer immediately of lack of progress or defective workmanship on the part of other Contractors where such delay or such defective workmanship will interfere with his own operations. Failure of a Contractor to keep informed of the work progressing on the site and failure to give notice of lack of progress or defective workmanship by others shall be construed as acceptance by him of the status of the work as being satisfactory for proper coordination with his own work.

36. **SUBCONTRACTS.**

A. The Contractor may, without additional expense to the Owner, utilize the services of subcontractors on those parts of the work that are specified to be performed by subcontractors.

B. Nothing contained in the Specifications of Drawings shall be construed as creating any contractual relationship between any subcontractor and the Owner. The divisions or sections of the Specifications are not intended to control the Contractor in dividing the work among subcontractors or to limit the work performed by any trade.

C. The Contractor shall be as fully responsible to the Owner for the acts and omissions of subcontractors and of persons employed by them, as he is for the acts and omissions of persons directly employed by him.

D. The Contractor shall be responsible for the coordination of the trades, subcontractors and material men engaged upon his work.

E. Neither the Owner nor Engineer will undertake to settle any differences between the Contractor and his subcontractors or between subcontractors.

F. The Contractor shall cause appropriate provisions to be inserted in all subcontract relative to the work to bind subcontractors to the Contractor by the terms of the General Conditions and other Contract Documents insofar as applicable to the work of subcontractors.

G. The Owner and the Engineer reserve the right to approve all subcontractors. Such approval shall be a consideration to the awarding of the Contract and unless notification to the contrary is given to the Contractor prior to the signing of the Contract, the list of subcontractors, which is submitted with his proposal, will be deemed to be acceptable.

H. In accordance with Section 4101 of the Government Code, each bidder, in his bid, shall set forth: (1) the name and location of the place of business of each subcontractor who will perform work or labor, or render services to the Contractor in or about the construction of the work, or improvement, in an amount in excess of one half of 1% of the Contractors total bid, and (2) the portion of the work which will be done by each such subcontractor.

I. In accordance with Section 4105 of the Government Code, if the Contractor fails to specify such subcontracts, he agrees to perform that portion of the work himself.

J. In accordance with Sections 4107 and 4107.5 of the Government Code, no Contractor whose bid is accepted shall without consent of the awarding authority, either: (1) substitute any person as a subcontractor in place of the subcontractor designated in the original bid; or (2) permit any such subcontractor to be assigned or transferred, or allow it to be performed by anyone other than the original subcontractor listed in the bid; or (3) sublet or subcontract any portion of the work in excess of one half of 1% of the Contractor's total bid as to which his original bid did not designate a subcontractor.

37. **USE OF WORK AREA AND CLEANING.** The Contractor shall maintain the work area under his control in an orderly condition. He shall store his apparatus, materials, supplies and equipment in such a manner as will not interfere with the daily operations of adjacent businesses or residences during the week. The Engineer shall approve all storage and field yard areas. The Contractor shall not permit any load or stress to be placed upon any part of the permanent work or existing work that will endanger the safety or strength of said work.

38. **CORRECTION OF WORK AFTER FINAL PAYMENT AND GUARANTEE ONE YEAR.** Neither the final certificate, final payment, or any provision in the Contract Documents shall relieve the Contractor of responsibility for faulty materials or workmanship, and he shall remedy any defects due thereto and pay for any damage to other work resulting therefrom, which may appear to be discovered up to one year after recording of the Notice of Completion. The Owner shall give notice of observed defects with reasonable promptness, and the Contractor shall proceed to remedy such defects immediately upon receiving such notification. Payments due to the Engineer by the Owner for extra engineering services required in the enforcement of Contractor's guarantee after acceptance of the work shall be paid to the Owner by the Contractor or his Surety.

39. **OCCUPANCY BY THE OWNER.** The Owner has the right to occupy and to use the any and all parts of the property to the completion of the entire work, and that such use shall not operate as an acceptance of any part of the work.

40. **DAMAGE TO ADJACENT AND EXISTING PROPERTY.** The Contractor shall be responsible for any and all damage done to existing property and adjacent construction work during all construction work under this Contract, and he shall make any repairs that result from his operations to the satisfaction of the Owner.

41. **UTILITIES.** The Contractor shall furnish and pay for all water, gas, electricity and other utilities used for construction purposes, unless otherwise provided in the Special Conditions or Specifications.

42. **TEMPORARY TOILET.** The Contractor shall construct a chemical toilet or temporary toilet connected to a cesspool for the use of all persons connected with the work. Structure shall have roof and door and shall be fly-proof. At conclusion of the work, the chemical toilet or cesspool and toilet shall be removed from the premises and excavation filled and left in a thoroughly sanitary condition. Exact location must be approved by the Engineer.

43. **CLIMATIC CONDITIONS.** The Contractor shall provide and maintain heat, fuel, materials, and services necessary to protect all work and materials against injury from extreme heat, cold, dry winds, or dampness as follows:

A. At all times during the placing, setting and curing of concrete and cement work, provide sufficient heat to insure the heating of spaces involved to not less than fifty (50) degrees Fahrenheit.

B. The Engineer shall have full authority to suspend operations on work when subject to damage by climatic conditions or because of insufficient curing or drying of surfaces or materials.

44. **LAWS CONCERNING THE OWNER A PART HEREOF.** The Contract is subject to all provisions of the constitution and laws of California governing, controlling or affecting the Owner, or the property, funds, operations or powers of the Owner, and such provisions are by this reference made a part hereof and of the Contract.

45. **WAGES AND HOURS.** The Owner has determined that the minimum wages paid on this project shall not be less that those set forth in the Notice Inviting Bids. It is the responsibility of bidders to inform themselves as to local labor conditions and prospective changes or adjustments of wage rates. No increase in the Contract price shall be allowed or authorized on account of the payment of increased wage rates.

In accordance with the provisions and requirements of section 1810-16 of the Labor Code, neither the contractor or the subcontractor who employees, directs, or controls the work of any worker employed to execute work done under the Contract, shall require or permit such worker to labor more than eight (8) hours during any one calendar day, except in cases of extraordinary emergency, caused by fire, flood or danger to life or property. Within thirty (30) days after any worker is permitted to work over eight (8) hours in one calendar day due to such extraordinary emergency, the Contractor shall file with the Owner a verified report settling the nature of the emergency. The report shall contain the name of the worker and the hours worked by him on the particular day. Failure to file the report within the thirty (30) day period shall be prima facie evidence that no extraordinary emergency existed. The Contractor and every subcontractor shall keep an accurate record showing the name of, and actual hours worked by, each worker employed by him in connection with the work executed under the Contract. The record shall be kept open to all reasonable hours to the inspection of the Owner and the Division of Labor Law Enforcement. The contractor shall forfeit, as a penalty to the Owner, $25.00 for each worker employed in the execution of the Contract by the contractor or by any subcontractor for each calendar day during which any worker is required or permitted to labor more than eight (8) hours, in violation thereof.

46. **BRAND OR TRADE NAME, SUBSTITUTION OF "EQUALS".** The provisions of this paragraph control over the provisions of paragraph 10 of these General Conditions.

Whenever any material, product, thing or services is specified by brand or trade name, the specified name shall be deemed to be followed by the words "or equal" (except where the product is designated to match others in use on a particular public improvement; either completed or in the course of completion).

As a part of his Bid Proposal any bidder must include a request for a substitution of an item "equal" to any so specified by brand or trade name. Within twenty-one (21) calendar days after award of the Contract, the Contractor may submit to the Engineer data substantiating such a request made in his Bid Proposal; otherwise the request shall be deemed to have been withdrawn. Such submission shall include data showing the equality, his reasons for making the request, and the difference, if any, in cost to the Contractor. The Engineer shall promptly investigate the request and make a recommendation to the Owner, who shall promptly determine whether or not the substitute is equal in every respect to the items specified, shall grant or deny the request accordingly, and shall notify the Engineer, who shall inform the Contractor in writing. Unless the request is granted by the governing board of the Owner, the substitution shall not be permitted. Nothing herein shall authorize any change in the Contract price nor prevent the use of Change Orders in the manner authorized by law for the project.

47. **NOTICE OF COMPLETION.** Within ten (10) days after the completion of construction in accordance with the Contract, the Contractor shall promptly notify the Engineer when construction is complete to enable the Engineer to make his final inspection, prepare a report and inform the Owner. Upon review and acceptance of the Engineer's report, the Owner shall cause a Notice of Completion to be recorded in the office of the County Recorder. Any significant deficiencies or requests for missing or incompleted portions of the work or submittals found within the report may be cause to withhold filing a Notice of Completion to allow the CONTRACTOR time to provide correction or remedy.

48. **EQUAL OPPORTUNITY.** The Contractor herein agrees not to discriminate in its recruiting, hiring, promotion, demotion or termination practices on the basis of race, religious creed, national origin, ancestry, sex, age, sexual preference or physical handicap in the performance of this Contract and to comply with the provisions of the State Fair Employment Practices as set forth in Part 4.5 of Division 2 of the California Labor Code.

49. **PROGRESS SCHEDULE**

The Contractor shall furnish three (3) copies of Job Progress Schedule to the Owner at the start of the construction and shall provide updates regularly as necessary, or as stipulated and requested by the Owner or his representative.

50. PRECONSTRUCTION CONFERENCE

The OWNER shall call a preconstruction conference after the award of the Construction Contract. A principal of the CONTRACTOR shall attend such a conference. At the conference, CONTRACTOR shall submit the name of the proposed Project SUPERINTENDENT for the project, along with a description of documented experience and references to verify the competency of the same. The CONTRACTOR shall also submit the names of each person authorized to execute Change Orders for and on behalf of the CONTRACTOR, a critical path construction schedule**,** showing the method by which CONTRACTOR proposed to accomplish the work and proposed completion dates of different aspects of the work, and what arrangements the CONTRACTOR wishes as to storage of on-site materials or equipment for the project.

At the preconstruction conference, CONTRACTOR will be asked whether he is aware of any ambiguity in the Contract Documents requiring clarification and whether the methods of accomplishment of the work provided for in the specifications are appropriate.

CONTRACTOR shall at the preconstruction conference report in detail as to what steps have been taken to provide the requisite personnel to accomplish the work, whether listed subcontractors have entered into subcontracts with him and what arrangements have been made for providing necessary equipment and material for the accomplishment of the work.

At the preconstruction conference, the CONTRACTOR shall submit to the ENGINEER a Schedule of Values of the various portions of the work, including quantities if required by the ENGINEER aggregating the total Contract Sum, divided so as to facilitate payment, prepared in such form as specified or as the ENGINEER and CONTRACTOR may agree upon, and supported by such data to substantiate its correctness as the ENGINEER may require. Each item in the Schedule of Values shall include its proper share of overhead and profit. This schedule, when approved by the ENGINEER, shall be used as a basis for CONTRACTOR's Applications for Payment.

The Contractor shall also provide the following submittals at or prior to the preconstruction meeting:

1. Vendor submittals and confirmation showing proof of ordering with delivery dates for all long lead items.
2. A traffic control, phasing and staging plan. (The traffic control plan shall include designated paths of travel for the disabled in compliance with the requirements of Title 24 and the Americans with Disabilities Act [ADA] through or around the project work area.)
3. Copies of permits.
4. Any requests for variances or substitutions.

END OF SECTION

SPECIAL PROVISIONS

PART 1 - GENERAL PROVISIONS

The Standard Specifications of the City are contained in the Standard Specifications for Public Works Construction ("Green Book"), 2012 Edition as written and promulgated by the Joint Cooperative Committee of the Southern California Chapter of the American Public Works Association and the Southern California District of the Associated General Contractors of California. Copies of these Standard Specifications are available from the publisher:

Building News, Incorporated
990 Park Center Drive, Suite E
Vista, CA 92081
(760) 734-1113

The Standard Specifications set forth above will control the general provisions, construction materials and construction methods for this contract except as amended by the Plans, Special Provisions, or other contract documents.

The Section Numbers of the following Special Provisions coincide with those of the Standard Specifications for Public Works Construction ("Green Book"), 2012 Edition. Only those sections requiring amendment or elaboration, or specifying options, are called out.

The Standard Specifications shall prevail in all cases except where a Contract Document of a higher order, provides a different requirement on a given topic or topic aspect. All language in the Standard Specifications that is not in conflict with the language in the prevailing contract Documents on a given topic or topic aspect shall remain in full force and effect, unless the language in the prevailing Contract Document specifically cites the section number in the Standard Specification and states that said provision is in lieu of that Standard Specification section.

References in the Special Provisions to "CALTRANS Standard Specifications" shall mean the Standard Specifications (2010 Edition or any updates thereof) of the State of California, Department of Transportation. Copies of these specifications may be obtained from the internet at dot.ca.gov/hq/esc/techpubs/, or:

State of California – Department of Transportation
1820 Alhambra Boulevard
MS 9/101
Sacramento, California 95816-8041
(916) 227-4132

References in the Special Provisions to Standard Plans shall mean the most recent Standard Plans of the City of Rancho Mirage and where applicable, the Riverside County and the State Department of Transportation, 2010 edition, or any updates thereof. Applicable Standard Plans for this project are contained in the Appendix of the Specifications.

Where the Plans or Specifications describe portions of the work in general terms, but not in complete detail, it is understood that the item is to be furnished and installed complete and in place and that only the best general practice is to prevail and that only materials and workmanship of the first quality are to be used. Unless otherwise specified, the CONTRACTOR shall furnish all labor, materials, tools equipment and incidentals, and do all the work involved in executing the contract.

SECTION 1 - TERMS, DEFINITIONS, ABBREVIATIONS AND SYMBOLS

1-2 DEFINITIONS

Agency/City/Owner	- City of Rancho Mirage
Board/Council	- Rancho Mirage City Council
Caltrans	- California Department of Transportation
County	- County of Riverside
Federal	- United States of America
State	- State of California
Engineer	- City Engineer or Designated Representative
Laboratory	- The designated laboratory authorized by the City of Rancho Mirage to test materials and work involved in the contract.
Standard Specifications	- Standard Specifications for Public Works Construction (Green Book)

SECTION 2 - SCOPE AND CONTROL OF THE WORK

2-1 AWARD AND EXECUTION OF THE CONTRACT.

(Replace with the following:)

Within ten (10) working days after the date of the Notice of Award, the CONTRACTOR shall execute and return the following contract documents to the AGENCY:

Contract Documents
Faithful Performance Bond
Payment Bond
General Liability Insurance Certificate
Automobile Liability Insurance Certificate
Worker's Compensation Insurance Certificate
Proposed Construction Schedule
Source and submittals of all contract materials, including proof of availability

Failure to comply with the above will result in annulment of the award and forfeiture of the Proposal Guarantee. The Contract Agreement shall not be considered binding upon the agency until executed by the authorized AGENCY officials.

A corporation to which an award is made may be required, before the Contract Agreement is executed by the AGENCY, to furnish evidence of its corporate existence, of its right to enter into contracts in the State of California, and that the officers signing the contract and bonds for the corporation have the authority to do so.

2-3 SUBCONTRACTS

The Bidder's attention is directed to the provision in Section 2-3 of the Standard Specifications for the Requirements and Conditions that he must observe in the preparation of the proposal form and the submission of the bid.

REQUIRED LISTING OF PROPOSED CONTRACTORS--In accordance with the subletting and Subcontracting Fair Practices Act, commencing with Section 4100 of the Public Contract Code:

The bidder's attention is directed to other provisions of said Act related to penalties for failure to observe the provisions by using unauthorized Subcontractors or by making unauthorized substitutions.

A sheet for listing Subcontractors, as required, is included in the Bid Proposal.

2-4 CONTRACT BONDS

Both the Faithful Performance Bond and the Payment Bond shall each be for not less than one-hundred percent (100%) of the total contract amount. The Payment Bond shall remain in force until thirty-five (35) days after the date of recordation of the Notice of Completion. The Faithful Performance date shall remain in force until one year after said date.

2-5 PLANS AND SPECIFICATIONS

2-5.1 General (Replace the first paragraph with the following:)
The CONTRACTOR shall maintain a control set of plans and specifications on the project site at all times. All final locations determined in the field, and any deviations from the plans and specifications, shall be marked in red on this control set to show the record conditions. Upon completion of all work, the CONTRACTOR shall return the control set to the Engineer. Final payment shall not be made until this requirement is met.

2-5.3.3 Submittals. [Replace the last two sentences of the first paragraph with the following]:
One (1) original of each product or construction document submittal shall be transmitted to the Engineer, along with a sequentially numbered Submittal Response Form (see Appendix). One (1) photocopy of the submittal shall be returned to the CONTRACTOR with the Submittal Response Form appropriately marked.

2-5.3.3 Submittals. [Add the following]:
Except as otherwise specified herein, the CONTRACTOR shall furnish for approval, within fifteen (15) working days following award of the Contract, all submittals as required on the Plans or in the Specifications. This provision shall not authorize any extension of time for performance of the Contract. The Engineer will check and approve such submittals, within ten (10) working days from receipt of same, only for conformance with design concept of work and for compliance with information and regulatory documents given in Contract Documents. Work shall be in accordance with approved submittals.

Unless specified otherwise, sampling, preparation of samples, and tests shall be in accordance with the latest standards of the American Society for Testing and Materials.

Samples of materials and/or articles shall, upon demand, be submitted for tests or examinations and consideration before incorporation of same in work started. The CONTRACTOR shall be solely responsible for delays due to submittals not being submitted in time to allow for proper time to make tests. Acceptance or rejection will be expressed in writing. The Engineer shall have sole discretion as to the acceptance or rejection of submittals. Rejection of submittals and any demand for re-submittal for review and approval by the Engineer shall not entitle the CONTRACTOR to additional time or costs caused by the rejection.

Materials furnished must be equal to approved samples in every respect. Samples which are of value after testing will remain the property of the CONTRACTOR.

2-8 RIGHT OF WAY [Add the following]:
The Agency reserves the right to prohibit the CONTRACTOR to work on property where right of way or right of entry has not been obtained prior to issuing the notice to proceed.

2-9 SURVEYING

2-9.1 Permanent Survey Markers. [Add the following]:
The CONTRACTOR shall be responsible for protecting all existing horizontal and vertical survey controls, monuments, ties and bench marks located within the limits of the project. If any of the above requires removal, relocation, re-establishment or resetting, the City shall, prior to any construction work and under the supervision of a California-licensed land Surveyor or Civil Engineer, establish sufficient temporary ties and temporary bench marks to enable the points to be reset after completion of construction. Monuments shall be reset per City Standard 611.

Any ties, monuments and bench marks disturbed during construction shall be reset by a Licensed Land Surveyor per City or County standards after construction and the tie notes submitted to the City on 8-1/2" x 11" heavy stock grid-lined survey record paper. The tie record shall be signed by the Licensed Surveyor. The CONTRACTOR and his sureties shall be liable for, at his expense, any resurvey required due to his negligence in protecting existing ties, monuments, bench marks or any such horizontal or vertical controls.

Full compensation for conforming to these requirements shall be considered as included in the various contract items and no separate payment will be allowed therefore.

SECTION 3 - CHANGES IN WORK

3-3.1 **General** (Add the following):
(a) No CONTRACTOR claims for extra work shall be accepted or approved by the Agency that are submitted more than 10 days after the work was performed unless the work has been authorized in writing by the Engineer.

3-3.2.3 Markup (Replace with the following):

(a) **Work by Contractor**. The following percentages shall be added to the CONTRACTOR'S costs and shall constitute the markup for all overhead and profit.

1)	Labor	15%
2)	Materials	10%
3)	Equipment Rental	10%
4)	Other Items and Expenditures	5%

To the sum of the costs and markups provided for in this subsection, 1 percent shall be added as compensation for bonding.

(b) **Work by Subcontractor.** When a Subcontractor performs all or any part of the extra work, the markup established in 3-3.2.3(a) shall be applied to the Subcontractor's actual cost of such work. The Contractor may add a markup of 5 percent of the subcontracted portion of the extra work.

SECTION 5 - UTILITIES

5-1 LOCATION (Add the following paragraphs:)
The CONTRACTOR shall notify the utilities at least 48 hours in advance of excavating around any of their structures.

The existence and locations of utilities shown on the drawings have been determined by a search of the available records as provided by the respective utility owner. The exact locations have not been determined by potholing unless so indicated on the drawings. The CONTRACTOR shall determine the exact location of all existing utilities prior to commencing work. He/She agrees to be fully responsible for any and all damages which may be occasioned by his failure to exactly locate and preserve any and all underground utilities, whether shown on the plans or not. In the event the CONTRACTOR encounters underground utilities not shown on the plans, he/she shall verify the exact location of the utility and immediately notify the Engineer, regardless of whether the unknown utility conflicts with the proposed construction or not**.** In the event of such a previously unknown conflict, the CONTRACTOR shall immediately notify the Engineer as to the extent, if any, of delays or additional costs resulting from said conflict.

The CONTRACTOR shall perform work and provide necessary materials to disconnect or relocate existing utilities as indicated. The CONTRACTOR shall document on record drawings all existing utility termination points before disconnecting.

The CONTRACTOR shall protect in place all existing power poles and overhead lines in the work area.

Where underground main distribution conduits such as water, gas, sewer, electric power, telephone, or cable television are shown on the Plans, the CONTRACTOR shall assume that every property parcel will be served by a service connection for each type of utility.

When uncharted or incorrectly charted underground piping or other utilities and services are encountered during site work operations, notify the applicable utility company immediately to obtain procedure directions. Cooperate with the applicable utility company in maintaining active services in operation.

The CONTRACTOR is advised of the existence of the utility notification service provided by UNDERGROUND SERVICE ALERT (USA). USA member utilities will provide the CONTRACTOR with the precise locations of their substructures in the construction area when the CONTRACTOR gives at least 48 hours notice to the

Underground Service Alert by calling 1-800-227-2600. CONTRACTOR shall provide the AGENCY with proof of contact with USA upon request.

1. Southern California Gas Company
   USA Member Utility, Phone 1-800-422-4133
   Protection of existing facilities by Contractor.

2. Southern California Edison Company
   Local Telephone (760) 202-4227/4254
   USA Member Utility, Phone 1-800-422-4133
   Protection of existing facilities by Contractor.

3. Verizon –Telephone
   USA Member Utility, 1-800-422-4133
   Protection of existing facilities by Contractor.

4. Coachella Valley Water District (Water, Sewer and Flood Control)
   USA Member Utility, Phone 1-800-422-4133
   Protection of existing facilities by Contractor.

5. Time Warner Cablevision
   Local Telephone (760) 340-2225
   Protection of existing facilities by Contractor.

6. City of Rancho Mirage, Public Works Department
   Local Telephone (760)770-3224
   Protection of existing facilities by Contractor.

The California Public Utilities Commission mandates that, in the interest of public safety, main line gas valves be maintained in a manner to be readily accessible and in good operating condition. The CONTRACTOR shall notify the Southern California Gas Company's Headquarters Planning Office at (714) 369-0680 at least two (2) working days prior to the start of construction.

The CONTRACTOR shall exercise extreme care to protect all existing utilities in place whether shown on the plans or not, and shall assume full responsibility for all damage resulting from his operations. The CONTRACTOR shall coordinate with each utility company as to the requirements and methods for the duration of protection, and shall be responsible for preparation and processing of any required plans or permits. The CONTRACTOR shall assume full responsibility to maintain uninterrupted service for all utilities.

By submitting a bid, the CONTRACTOR acknowledges the above referenced utility work to be completed in conjunction with this project. The CONTRACTOR shall schedule his work and conduct his operations so as to permit access and time for the required utility work to be accomplished during the progress of the work.

The CONTRACTOR shall coordinate with each utility company as to the extent of required work and the time required to do so. The CONTRACTOR shall include this time in his/her schedule. Payment for the above, if any, shall be deemed as included in the items of work, and no additional compensation as will be allowed.

5-4 RELOCATION. [Delete the Second and Fourth Paragraphs and add the following paragraph]:
Except as otherwise directed or called out on the approved plans, the alteration or temporary relocation of all service connections (including but not limited to: water, irrigation water, sewer, natural or manufactured gas, underground and/or overhead telephone and electrical) to any adjacent property or landscaped medians shall be the responsibility of the CONTRACTOR. The CONTRACTOR shall restore the service connections immediately after any disruption in service. No attempt has been made to show all service connections on the Plans. The CONTRACTOR shall make all arrangements with the utility owners regarding such work. The costs for such work on service connections, except when specified in the detailed specifications that the utility owners will make no charges for the work, shall be absorbed in the unit prices or included in the lump sum amounts bid for the various other contract items.

SECTION 6 - PROSECUTION, PROGRESS AND ACCEPTANCE OF WORK

6-1 CONSTRUCTION SCHEDULE AND COMMENCEMENT OF WORK
(Replace with the following):

The CONTRACTOR'S proposed construction schedule shall be submitted to the Engineer within ten (10) working days after the date of the Notice of Award of Contract. The schedule shall be supported by written statements from each supplier of materials or equipment indicating that all orders have been placed and acknowledged, and setting forth the dates that each item will be delivered.

Prior to issuing the Notice to Proceed, the Engineer will schedule a preconstruction meeting with the CONTRACTOR to review the proposed construction schedule and delivery dates, arrange the utility coordination, discuss construction methods, and clarify inspection procedures.

The CONTRACTOR shall submit periodic progress reports to the Engineer by the tenth day of each month. The report shall include an updated construction schedule. Any deviations from the original schedule shall be explained. Progress payments will be withheld pending receipt of any outstanding reports.

6-7 TIME OF COMPLETION

6-7.1 General (Add the following):
The time for completion shall be as set forth in Paragraph C.3 of the Standard Agreement, Section 00312-2 “Time For Completion”, and Paragraph 3, Section 00700-1, “Time For Completion”, of the General Conditions.

6-7.2 Working Day (Add the following):
The CONTRACTOR'S activities shall be confined to the hours between 7:00 A.M. and 4:00 P.M., Monday through Friday, excluding holidays. Deviation from these hours will not be permitted without the prior consent of the Engineer, except in emergencies involving immediate hazard to persons or property.

In the event of either a requested or emergency deviation where additional time, days or inspectors are deemed necessary, inspection service charges will be charged against the CONTRACTOR. The service charges will be calculated at overtime rates including benefits, overhead, and travel time. The service charges will be deducted from any amounts due the CONTRACTOR.

6-9 LIQUIDATED DAMAGES
(Replace last sentence of the first paragraph and the entire second paragraph with the following):

For each consecutive calendar day in excess of the time specified, as adjusted in accordance with Subsection 6-6, for completion of the work the CONTRACTOR shall pay to the AGENCY, or have withheld from monies due it, the sum of $1,000.

Execution of the Contract shall constitute agreement by the Agency and CONTRACTOR that $1,000 per day is the minimum value of the costs and actual damage caused by the failure of the CONTRACTOR to complete the Work within the allotted time. Such sum is liquidated damages and shall not be construed as a penalty, and may be deducted from payments due the CONTRACTOR if such delay occurs.

SECTION 7 - RESPONSIBILITIES OF THE CONTRACTOR

7-1 CONTRACTOR'S EQUIPMENT AND FACILITIES (Add the following):
A noise level limit of 86 dba at a distance of fifty feet (50') shall apply to all construction equipment on or related to the job whether owned by the CONTRACTOR or not. The use of excessively loud warning signals shall be avoided except in those cases required for the protection of personnel.

7-2 LABOR

7-2.1 Laws (Add the following):
The CONTRACTOR, and all subcontractors, suppliers and vendors, shall comply with all AGENCY, State, and Federal orders to ensure equal employment opportunities and fair employment practices.

7-3 LIABILITY INSURANCE
(Replace the entire Subsection with the following):

7-3.1 Indemnification
The CONTRACTOR shall indemnify and save harmless the City of Rancho Mirage, the State of California, the County of Riverside, and/or any incorporated city for all claims or suits for damages arising from his/her prosecution of the contract work, as more fully described in Subsection 7-3.2 "Contractor's Liability."

7-3.2 Contractor's Liability
The City of Rancho Mirage, its City Council, or its Engineer, shall not be answerable or accountable in any manner for any loss or damage that may happen to the work or any part thereof; or for any of the materials or other things used or employed in performing the work; or for injury to any person or persons, either workmen or the public; or for damage to adjoining property from any cause which might have been prevented by the CONTRACTOR or his/her workmen or any one employed by him, against all of which injuries or damages to persons and property the CONTRACTOR, having control over such work, must properly guard. The CONTRACTOR shall be responsible for any damage to any person or property resulting from defects or obstructions or any time before its completion and final acceptance, and shall indemnify and save harmless the City of Rancho Mirage, its City Council, and the Engineer from all suits or actions of every name and description brought for, or on account of, any injuries or damages received or sustained by any person or persons, by the CONTRACTOR, his/her servants or agents, in the construction of the work or by or in consequence of any negligence in guarding the same, in improper materials used in its construction, or by or on account of any act or omission of the CONTRACTOR or has agents, and so much of the money due the CONTRACTOR under and by virtue of the contract as shall be considered necessary by the CITY may be retained by the CITY until disposition has been made of such suits or claims for damages aforesaid.

If, in the opinion of the Engineer, the precautions taken by the CONTRACTOR are not safe or adequate at any time during the life of the contract, he may order the CONTRACTOR to take further precautions, and if the CONTRACTOR shall fail to do so, the Engineer may order the work done by others and charge the CONTRACTOR for the cost thereof, such cost to be deducted from any money due or becoming due the CONTRACTOR. Failure of the Engineer to order such additional precautions, however, shall not relieve the CONTRACTOR from his/her full responsibility for public safety.

7-5 PERMITS (Replace the first sentence with the following):
Prior to the start of any work, the CONTRACTOR shall take out the applicable CITY permits and make arrangements for CITY inspections. The CONTRACTOR and all subcontractors shall each obtain any and all other permits, state licenses, CITY Business licenses, inspections, certificates, or authorizations required by any governing body or public utility. **The City of Rancho Mirage encroachment permit fee will be $23,000**. The permit shall be obtained by the contractor prior to the start of work. Payment for this work shall be included in the bid item of work “Encroachment Permit” and no additional compensation will be allowed.

7-8 PROJECT SITE MAINTENANCE (Add the following):

7-8.1 Cleanup and Dust Control.
The CONTRACTOR shall read and abide by the requirements set out in the **Local Air Quality Management Plan** attached to the Plans. In particular this has provisions for: control of the site construction dust through daily watering of all disturbed areas and/or treatment of said areas with an approved “Dust Palliative” as described under Section 7-9, “Protection and Restoration of Existing Improvements”, any requirements for all hauled materials to be appropriately covered with tarps; and a provision for street sweeping to remove sand and dust from traffic zones. Any sandblasting must be done by the “wet” method, and all residues must be cleaned up by street sweepers as soon as possible. Any substance other than water to be used for dust control for this project must be pre-approved by both the Engineer and the Regional Water Quality Control Board.

Costs for maintaining dust control measures, including hydromulch, fiber and other palliatives during construction and obtaining and applying construction water for dust control shall be paid for in the listed Bid Item “MOBILIZATION, BONDS & INSURANCE”.

7-8.1.1 Demolition and Construction Material Recycling.

CONTRACTOR shall recycle demolition and construction materials from the job site. For example, asphalt, concrete, metals, glass, and greenwaste are all recyclable materials. CONTRACTOR shall provide the City with verification, including name and address, of the company hauling the recyclable materials. Weight tickets shall be submitted to the City from the facility receiving the materials.

7-8.7 Drainage Control (Add the following):

Flow, Acceptance and Removal of Water
It is anticipated that storm, surface or other waters will be encountered at various times during the work herein contemplated. The CONTRACTOR, by submitting a bid acknowledges that he/she has investigated the risk arising from such waters and has prepared his/her bid accordingly, and CONTRACTOR submitting a bid, assumes all said risk.

The CONTRACTOR shall conduct his/her operations in such a manner that storm or other existing waters may proceed uninterrupted along their existing street or drainage courses. Diversions of water for short reaches to protect construction in progress will be permitted if public and/or private properties, in the opinion of the Engineer, are not subject to probability of damage. The CONTRACTOR shall obtain written permission from the applicable public agency or property owner before any diversion of water outside of public right-of-way will be permitted.

7-9 PROTECTION AND RESTORATION OF EXISTING IMPROVEMENTS (Add the following):
If any irrigation facilities are encountered they shall be preserved in place or repaired quickly so no serious disruption in watering takes place.

Restoration of other landscape items shall follow the Standard Specifications except as modified by these Special Provisions. If questions arise about how the finished products should look, the CONTRACTOR should anticipate allowing direction from the residents and the Engineer. If resident requests appear to be beyond the scope of the plans and specifications, the CONTRACTOR shall get written clearance from the Engineer to proceed prior to doing the work. However, the City is not opposed to the CONTRACTOR setting up separate construction agreements outside this contract if they do not interfere with this project. If such “side-jobs” require City Permits, the CONTRACTOR is responsible for getting them prior to the work being done.

At the end of the project, and/or prior to stopping the daily watering routine, all non-traffic disturbed areas shall be sealed with a wood fiber or recycled paper “hydromulch” containing a natural or chemical binding agent acceptable to the City and the Regional Water Quality Control Board per Caltrans Standard Specifications 20-2.07 “Fiber”. Formulations and application should be aimed at stabilizing the soil until such time as native plants re-establish themselves. Alternately, such areas may be treated by seeding them with a grass or flower seed and continuing the watering operations until the plants are at least 2” high.

Fiber shall be produced from natural or recycled (pulp) fiber, such as wood chips or similar wood materials or from newsprint, chipboard, corrugated cardboard or a combination of these processed materials, and shall be free of synthetic or plastic materials. Fiber shall not contain more than 7 percent ash as determined by the Technical Association of the Pulp and Paper Industry (TAPPI) Standard T413, shall contain less than 250 parts per million boron and shall be otherwise nontoxic to plant or animal life.

Fiber shall have a water-holding capacity by mass of not less than 1200 percent as determined by the procedure designated in the Caltrans Final Report, CA-DOT-TL-2176-1-76-36, “Water-Holding Capacity for Hydromulch,” available from the Caltrans Laboratory.

Fiber shall be of such character that the fiber will disperse into a uniform slurry when mixed with water. Water content of the fiber before mixing into slurry shall not exceed 15 percent of the dry mass of the fiber. The percentage of water in the fiber shall be determined by California Test 226. Fiber shall have the moisture content of the fiber marked on the package. Fiber shall be colored to contrast with the area on which the fiber is to be applied, and shall not stain concrete or painted surfaces.

A certificate of Compliance for fiber shall be furnished to the Engineer in conformance with the provisions in Section 6-1.07, “Certificates of Compliance,” in the Caltrans Standard Specifications.

The hydromulch shall have a binder material that is safe for the environment; such as may be created from natural substances like lignin or cellulose, or chemical binders that have been approved by the Regional Water Quality Control Board such as Acrylic Polymer. The binder shall be of sufficient strength when combined with the hydromulch that weeds will be able to re-establish themselves before the hydromulch breaks down. An application rate shall be chosen that leaves a layer approximately ¼ inch thick on all surfaces. A neutral colorant (typically green or brown) shall be added to the hydromulch so that it contrasts slightly with the sand, so that application thoroughness can be readily checked. The colorant shall not stain concrete or other materials that it may come in contact with, and it should be designed to fade after application.

Payment for disturbed area sealant shall be included in the **Lump Sum** unit price bid for MOBILIZATION, BONDS & INSURANCE, and no additional payment will be made therefore.

7-10 PUBLIC CONVENIENCE AND SAFETY

7-10.1 Traffic and Access [Add the following paragraphs]:
When entering or leaving roadways carrying public traffic, the CONTRACTOR'S equipment, whether empty or loaded, shall in all cases yield to public traffic. Construction access shall only be as allowed by the Engineer and as set forth in these Special Provisions and as shown on the approved Traffic Control Plan.

To the extent possible, access shall be maintained to all properties, businesses and residences by use of temporary ramps and/or detours. Driveway construction shall be phased to allow access during construction. Any closures shall be approved by the Engineer prior to occurrence.

The CONTRACTOR shall notify all affected property owners of the proposed schedule a minimum of 48 hours, but not more than 72 hours, in advance of any limitation or closure of access to their property. Form of said notice shall be as approved by the Engineer and shall contain the date and time of the closure. In the event of delay, whether beyond the control of the CONTRACTOR or not, the CONTRACTOR shall notify all affected property owners as to the extent of the delay and his revised schedule. In the event of delay over 72 hours, the CONTRACTOR shall re-notify the property owners as described above. Payment for notification and coordination shall be included in the compensation paid for the various items of work and no additional compensation will be allowed.

Traffic Requirements

A minimum of one (1) travel lane in each direction shall be maintained at all times. The CONTRACTOR shall develop a traffic detouring plan for each phase as set forth in the **W**ork **A**rea **T**raffic **C**ontrol **H**andbook. The CONTRACTOR shall submit a detailed construction detour plan consistent with the traffic detour exhibits for CITY review and approval for each stage of construction prior to start of construction.

The Traffic Control pay item shall include all material, equipment, and labor necessary to provide traffic control to fully protect the public from danger due to the work being done. The Contractor shall be responsible for furnishing, placing, and maintaining the traffic control devices per the latest edition of the Work Area Traffic Control Handbook (W.A.T.C.H.). The Contractor shall at his own expense modify or add traffic control devices as deemed necessary by the CITY'S ENGINEER.

Traffic Control will be considered as included in the Traffic Control bid proposal pay item and no additional payment will be made therefor.

7-10.1.2 Payment
Full compensation for providing the **Traffic Control** system (including signs) shall be considered as included in the Bid Item for Traffic Control and no additional payment will be made thereof.

7-10.2 Storage of Equipment and Materials in Public Streets. [Add the following]
The CONTRACTOR may, at his/her own expense, maintain and operate a work and storage area outside of the public right-of-way. In such case the CONTRACTOR shall submit to Agency written authorization from the owners of the subject property prior to occupation. Occupation of site without written authorization shall be grounds for immediate suspension of work. The Location of site is to be approved by Agency prior to usage. Condition and operation of yard shall conform to these specifications. The CONTRACTOR shall assume full

responsibility for all damage to the site resulting from his/her operations and shall repair and or replace same at his/her own expense to the satisfaction of the owner of the subject property. The CONTRACTOR shall vacate site and clean it and seal it with a “hydromulch” or fiber per Section 7-9, “Protection and Restoration of Existing Improvements” noted above and as approved by the City Engineer within five (5) working days following application for Notice of Completion. The CONTRACTOR shall obtain a written release from the property owner specifying the condition of the vacated site and releasing the CONTRACTOR from any further clean-up or restoration work and shall submit a copy of such release to Agency. The Notice of Completion will not be issued until said release is submitted.

Payment for the performance of any work, use or lease of property, maintenance and cleanup during occupation and following completion of all work shall be included in the compensation paid for the various items of work, and no additional compensation will be allowed.

7-10.3 Street Closures, Detours and Barricades. [Add the following]:
The CONTRACTOR shall maintain the minimum traffic requirements designated in the General Conditions.

No street or access closure to through traffic will be allowed without the express approval of the Agency.

The CONTRACTOR shall be responsible for providing temporary access to all driveways at the end of each work day and as much as possible during the construction day.

The CONTRACTOR shall provide and maintain all other signs, barricades pedestals, flashers, delineators and other necessary facilities for the protection of the public within the limits of the construction area. The CONTRACTOR shall also post proper signs to notify the public regarding detours and the condition of the roadway, all in accordance with the provisions of the Vehicle Code and the current California Department of Transportation California Manual on Traffic Control Devices, 2009 Edition. Should the CONTRACTOR appear to be neglectful or negligent in furnishing warning and protective measures as provided, the Engineer may direct attention to the existence of a hazard and the necessary warning and protective measures shall be furnished and installed by the CONTRACTOR at his expense. Should the Engineer point out the inadequacy of warning and protective measures, such action on the part of the Engineer shall not relieve the CONTRACTOR from responsibility for public safety or abrogate his obligation to furnish and pay for these devices.

When lane closures are made for work periods only, at the end of each work period, all components of the traffic control system, except portable delineators placed along open trenches or excavation adjacent to the traveled way, shall be removed from the traveled way and shoulder. If the CONTRACTOR so elects, said components may be stored at selected central locations, approved by the Engineer, within the limits of the highway right of way.

Full compensation for conforming to this article shall be considered as included in the various items of work involved, and no additional compensation will be allowed therefore.

All existing stop signs, street name signs and regulatory signs shall be maintained in visible locations during construction and permanently relocated or removed as directed by the plans and the Engineer.

7-10.4.1 Safety Orders. [Add the following paragraph]:
The CONTRACTOR shall comply with the provisions of any Agency ordinances or regulations regarding requirements for the protection of excavations and the nature of such protection.

SECTION 9 - MEASUREMENT AND PAYMENT

9-3.2 Partial and Final Payment (Replace the last paragraph with the following):
The closure date for periodic progress payments shall be five (5) working days prior to the first Monday of each month. The final progress payment shall not be released until the CONTRACTOR returns the control set of plans and specifications showing the record conditions, and provides any other documentation or submittals required by these specifications.

The full five percent (5%) retention shall be deducted from all payments. The final retention shall be authorized for payment thirty-five (35) days after the date of recordation of the Notice Completion and Acceptance of the work.

In conformance with the State of California Public Contract Code Part 5, Section 22300, the CONTRACTOR may substitute securities for any monies withheld by the CITY to ensure performance under the contract.

9-3.3 Delivered Materials (Replace with the following):
Materials and equipment delivered but not incorporated into the work will not be included in the estimate for progress payment, subject to the discretion of the Engineer.

9-3.4 Mobilization (Replace with the following):
Mobilization shall consist of preparatory work and operations, including but not limited to those necessary for the movement of personnel, equipment, supplies and incidentals to the project site; for the establishment of all portable offices, buildings and other facilities necessary for the work on this project; and for all other work and operations which must be performed or cost incurred prior to beginning work on the various contract items on the project site.

Mobilization shall also include, but not be limited to, temporary power, construction water (including meter acquisition and fees), scheduling, progress reports, invoicing, permits (except as otherwise provided in these specifications), staging areas, special inspection, mobilizing equipment, personnel and materials, and all other indirect costs associated with completing the work and not covered or compensated under relevant bid items.

The compensation paid for mobilization shall be included in accordance with the Standard Specifications and paid for under the **lump sum** mobilization bid item and shall be full compensation for all costs incurred by the CONTRACTOR for doing all the work involved in mobilization as specified herein. Payment for mobilization will be included with the first month progress payment and shall be considered full compensation for the cost of such mobilization and administered for the entire contract period.

Note: Prior to any progress payments the CONTRACTOR shall submit to the Engineer for review and approval a “Schedule of Values” for Bid Item No. 1, which shall detail the costs of all items to be paid the CONTRACTOR under this bid item.

TECHNICAL PROVISIONS
SECTION 010000
GENERAL LANDSCAPE CONDITIONS

1.01 DEFINITIONS

A. Owner: City of Rancho Mirage

B. Contractor: An individual or company contracting with the Owner to provide materials or perform services, or both, for a specific portion of the work.

C. Subcontractor: An individual or company contracting with a Contractor to provide materials or perform services, or both, for a specific portion of work.

D. Landscape Architect: RGA Landscape Architects, Inc.

1.02 SUBSTITUTIONS

All materials shall be as specified unless the Contractor can establish the fact that they are unavailable, and substitutions are approved in writing by the CITY.

1.03 MAINTENANCE

Prior to acceptance of the project by the Owner, all maintenance must be performed by the Contractor. After acceptance of the project, the Owner shall be responsible for maintaining all components of the work as necessary to keep the project in its original, approved condition. This maintenance by the Owner includes, but is not limited to, periodic inspection for loose hardware or fittings and maintenance of all equipment as necessary to prevent loose fittings from occurring. Also included are all components of the irrigation system, including filters, valves, backflow preventers, etc. (see irrigation specifications), light fixtures, lamps, wiring, controllers, photocells, etc. (see lighting specifications).

The Contractor is responsible for delivering all maintenance manuals to the Owner for use in following manufacturer mandated maintenance procedures.

Contractor is responsible for any damage or loss of all product at the job site due to acts of God prior to the time in which the product is installed. After the product is installed by contractor, Owner is responsible for all loss or destruction through acts of God. Acts of God does not include excessive summer heat. This clause is only limited to acts of God and does not absolve Contractor of its maintenance responsibilities hereunder.

1.04 OBSERVATION AND SITE ACCESS

Landscape Architect is not responsible for site observation unless specifically hired by Owner to provide such observation. As such, the Landscape Architect is not responsible if Contractor or its Subcontractors deviate from Landscape Architect's plans and specifications.

The Landscape Architect shall have access to the work at all times. The Contractor shall furnish all facilities for observation at the construction site, including transportation throughout site if the site does not have roads passable by ordinary passenger cars, and at shops or yards and shall not cover up any work requiring observation until the same has been approved by the CITY. If work should be covered up before inspected, the Contractor will be required to remove such portions of the work as may be necessary to disclose the part in question.

1.05 PLANS AND SPECIFICATIONS

These specifications are intended to cover all labor, material and standards of landscape architectural workmanship to be employed in the work shown on the plans or called for in these specifications or reasonably implied by terms of same. The plans and specifications are intended to complement one another; any part of the work that may be mentioned in the one and not represented on the other shall be done the same as if it had been mentioned or represented in both. Work or materials of a minor nature which may not be specifically mentioned, but which may be reasonably assumed as necessary for the construction or completion of this work shall be performed by the Contractor the same as if shown on the drawings or described in the specifications. In general, except that the CITY'S directives shall always take first precedence, the specifications will take precedence over the drawings and large details over small scale drawings. Figures, when given, shall be followed in preference by scale measurements.

1.06 INTERPRETATION OF PLANS AND SPECIFICATIONS

The CITY will interpret the meaning of any part of the plans and specifications about which any misunderstanding may arise, and his decision will be final.

Should there appear to be any error or discrepancy in or between the plans and the specifications, the Contractor shall refer the matter to the CITY for adjustment before proceeding with the work. Should the Contractor proceed with the work without so referring the matter, he does so on his own responsibility.

1.07 CORRESPONDENCE

All correspondence shall be addressed to the offices of the Owner.

1.08 EXAMINATION OF SITE AND WORK

Bidders must examine the location, physical conditions, and surroundings of the proposed work and judge for themselves the nature of the work to be done.

The plans for the work show conditions as they are supposed or believed by the Landscape Architect to exist. It is the Contractor's responsibility to inform CITY of any variation between plans and actual site conditions prior to starting any work. Should Contractor begin work without verifying that plans match site conditions, Contractor assumes all responsibility for any losses he might incur.

1.09 EXISTING UTILITY LINES

Except as indicated by the drawings or specifications, the Contractor will not be liable for the re-routing of existing active underground lines which may be discovered during the progress of the work. Contractor shall verify location of existing utilities prior to starting work. The Contractor shall verify location of existing utilities prior to starting work. The Contractor shall be liable for damage to existing utilities.

1.10 LEGAL REQUIREMENTS

The Contractor shall comply with all laws, ordinances, rules and regulations of all governing entities having jurisdiction, applying to work to be performed under this contract. This includes but is not limited to, the EPA, City of Rancho Mirage, and County of Riverside. Lien releases shall be given to Owner by all workmen prior to payment. Contractors shall comply with all federal and state laws pertaining to workers compensation insurance and immigration.

1.11 CODES

The Contractor shall comply with all federal, state and local codes applicable to his/her work. Work must be performed within the parameters of the currently adopted versions of the CBC, CPC, and CEC.

The Contractor shall have a valid state license pertaining to the portion of work he/she is performing.

1.12 PERMITS AND INSPECTIONS

The Contractor shall obtain, coordinate and pay for any and all permit fees and City inspections as required in connection with the work to be done under the contract, unless otherwise specified below.

1.13 LICENSE

All work shall be performed by California licensed Contractors.

1.14 QUALITY OF WORK AND MATERIALS, WARRANTIES

All materials, parts and equipment furnished by the Contractor shall be new, high grade and free from defects and imperfections, unless otherwise hereinafter specified. Workmanship shall be in accordance with the best standard practices. Both materials and workmanship shall be subject to the approval of the CITY.

Unless stated otherwise in these specifications, all hardscape, irrigation and lighting materials, and all premanufactured items and all workmanship must be warranted for a minimum of one year after the project is certified as complete by the government agency.

All plant material shall be warranted as stated in Sections 329219, 329000, 329020 and 329010.

All materials and workmanship found to be defective during any warranty period shall be repaired and/or replaced to the satisfaction of the CITY at no charge to the Owner within a reasonably short period of time after discovery of the defect.

1.15 WORKMEN

None but workmen skilled in the various trades required on this contract shall be employed upon the work.

1.16 LIGHTS AND GUARDS

The Contractor shall provide such lights, guards, temporary fences and warning signs as may be necessary for safety, all the time and from the execution of the contract until the final acceptance of work, and shall be responsible for the installation and maintenance of such lights, guards, fences and warning signs.

1.17 APPROVALS

Unless otherwise specified "approved", "approval", "authorized", "directed" and "permitted" shall be deemed to be followed by the words "by the Owner".

1.18 LIGHT, POWER AND WATER

The Contractor will furnish water and shall furnish, maintain and remove all temporary power lines at his own expense and shall remove same at completion of the work.

1.19 WORK NOT INCLUDED

Work not included under this contract consists of that marked "N.I.C." on plans or shown as existing work to remain.

Engineering and engineering plans for drainage, geotechnical and civil engineering are excluded from the scope of Landscape Architect's responsibilities and services. Additionally, the Landscape Architect is not responsible to review and analyze any engineering plans related to the above-referenced plans. Any review and analysis is the sole responsibility of the engineer who prepares the specific plan. The Landscape Architect is not responsible for any construction phase services, bid coordination services, or site visit services unless specifically included in its contract with the Owner. The Landscape Architect is not responsible for the quality of workmanship of any Contractor or Subcontractor hired by Owner or his Contractor for the construction of those items included in the scope of work of Landscape Architect's responsibilities under his contract with the Owner. This would include, but not be limited to, irrigation systems, planting, lighting and any hardscape. Landscape Architect is not responsible for nor does it warrant this work. Finally, Landscape Architect is not responsible for any drainage. Contractor accepts direct responsibility for such items.

1.20 DRAWINGS

The work shall conform to the drawings and specifications, except that the CITY's written change orders shall always take precedence.

1.21 CLEANING AND RESPONSIBILITY FOR DAMAGE

On a regular basis during completion of the work, the areas shall be cleaned of debris emanating from the work. The Contractor shall remove remaining excess materials, waste, rubbish, debris, etc., and his/her construction and installation equipment from the premises. All dirt, stains, etc., caused by the work under the contract shall be removed from the surfaces of any hardscape or structures under this contract, or from surfaces not in this contract but soiled by the work of this contract. Any damage caused by the Contractor or his/her subcontractors or employees shall be repaired to the satisfaction of the Owner.

1.22 CLEANUP

The contractor shall remove all debris associated with his/her work from the project site on a daily basis. The contractor is responsible for providing proper debris receptacles, or disposing of debris off site.

All receptacles or off site disposal must conform to state and local codes. The Contractor is responsible for identifying any waste associated with his/her work which may be deemed as being "hazardous" as defined by the EPA, and disposing of it per EPA regulations.

1.23 CONTRACT DOCUMENTS

Landscape Architect's contract with Owner is hereby incorporated into these General Conditions.

1.24 SCOPE OF WORK

The Contractor shall provide all labor, materials, transportation and services necessary to furnish and install all construction elements shown on the drawings and specifications herein.

1.25 INSURANCE

The Contractor shall carry all workmen's compensation, public liability and property damage insurance as required by all applicable codes, regulations and by the Owner.

1.26 ENCROACHMENT

The Contractor shall be responsible for coordination of encroachment into adjacent property, rights of way, easements, setbacks or any other legal property restriction either marked or unmarked. This includes damage or encroachments to any public utility.

1.27 COORDINATION OF ACTIVITIES

The Contractor shall be responsible for coordination of his activities with all other tirades through the Owner.

1.28 FIELD STAKING

Prior to installation, the Contractor shall locate by stakes or other means all construction elements, as delineated on the plans for approval by the Owner.

1.29 LIABLE FOR DAMAGE

The Contractor shall be liable for damage to all utilities, construction, irrigation and planning elements, existing or new, marked or unmarked, and shall replace or repair damage in a manner acceptable to the Owner.

1.30 WRITTEN GUARANTEE

All work shall be guaranteed by the Contractor as to material, and workmanship for a period of one year following the date of final acceptance of project. The Contractor shall provide a written guarantee on his letterhead at the time of the final inspection.

1.31 WRITTEN CERTIFICATION

The Contractor shall provide a written certification that its work is installed free from defects, materials and workmanship, and in full compliance with the drawings and specifications. This shall be on the Contractor's letterhead with his Contractor's license number.

1.32 TURNOVER ITEMS

The Contractor shall supply to the Owner, as part of this contract, the following items prior to the time of the final inspection.

A. A reproducible set of as-built drawings. All work shall be neat and legible. Contractor shall certify reproducibles as to accuracy and completeness;

B. The original of the guarantee letter;

C. The original of the certification letter;

D. Keys to any equipment installed at the site;

E. Any special equipment or manuals required for the proper operation, adjusting, assembling and removing of each type of equipment supplied on this project as requested by the Owner.

F. Controller charts.

1.33 OBLIGATION OF SUBCONTRACTOR

Any Subcontractors utilized by Contractor are obligated to perform these general conditions and, as such, are to be incorporated in Contractor's contract with its Subcontractors.

SECTION 016010
ELECTRICAL GENERAL CONDITIONS

PART 1 - GENERAL

1.01 SCOPE

A. Work Included. All labor, materials, appliances, tools, equipment, facilities, transportation and services necessary to performing all operations in connection with furnishing, delivery and installation of the work as shown on the drawings and/or specified herein. Work includes, but is not necessarily limited to, the following:

1. Review and coordinate all work with other sections of this specification and associated drawings. Electrical work related to those sections and drawings are required to be included as work under this section.

2. General provisions and requirements for electrical work.

1.02 SUBMITTALS

A. General

1. Refer to Division 1 for additional requirements if provided.

2. Review of contractor submittals is intended for the general conformance with the design concept of the project and general compliance with the information given in the contract documents. Any action shown is subject to the requirements of the plans and specifications. Contractor is responsible for quantities; dimensions which shall be confirmed and correlated at the job site; fabrication process and techniques of construction; coordination of work with that of all other trades and satisfactory performance of their work.

3. The Contractor shall review each submittal in detail for compliance with the requirements of the contract documents prior to submittal to the City of Rancho Mirage (“City”) Project Manager. The Contractor shall imprint their company stamp and sign each item of the submittal. By signing the contractor acknowledges the following; Certification that each submittal has been reviewed by the contractor and complies with all the requirements of the contract documents.

4. Where the construction documents indicate specific manufacturer(s) for any given product, it shall be considered a substitution if the contractor proposes to use any manufacturer other than those specifically named. The Contractor shall clearly and specifically identify each individual proposed substitution or proposed deviation from the requirements of the contract documents with a statement 'THIS ITEM IS A SUBSTITUTION."

5. Refer to the electrical construction documents “General Notes” for additional requirements concerning shop drawing submittals and additional electrical requirements.

B. Material Lists and Shop Drawings:

1. Submit material list and equipment manufacturers for approval within 30 days of award of contract. Give name of manufacturer and where applicable, brand name, type and/or catalog number of each item. Listing of more than one manufacturer for any one item of equipment, or listing items "as specified," without make and model or type designation, is not acceptable. Shop drawings shall not be submitted before approval of manufacturers list. The right is reserved to require submission of samples of any material whether or not particularly mentioned herein.

2. Within three weeks after approval of the material and equipment manufacturers list, submit shop drawings for approval. Shop drawings shall be submitted in bound groups of materials. Shop drawing shall be prepared by factory authorized representatives. Departure from the above procedure will result in resubmittal and delay.

3. Submit product data sheets for all meter pedestals, panels, pull boxes, wiring devices, relays, contactors, time switches, mounting accessories for light fixtures.

4. Submit product data sheets for all wire and cables, conduit, fittings and splicing materials.

5. Submit detailed shop drawings including dimensioned plans, elevations, details, schematic and point-to-point wiring diagrams and descriptive literature for all component parts for relays, time clocks, and photocells.

6. Submittals which are intended to be reviewed as a substitution or departure from the contract documents must be specifically noted.

7. It shall be the responsibility of the Contractor to ensure that all material and equipment is ordered and released for shipment to ensure installation in time to provide an orderly progression of the work and to not hold up any other subcontractors in completing their work. The full operation of the installation shall meet the scheduled completion date set by the City. The Contractor shall notify the City Project Manager of any changes in delivery that would affect the project completion date.

C. The Contractor shall be responsible for incidental, direct and indirect costs resulting from the substitution of specified contract materials or work.

D. Maintenance and Operating Manuals:

1. The Contractor shall furnish three (3) copies of maintenance and operating manuals for all electrical equipment to the City and instruct the City's personnel in correct operation of all equipment at completion of project.

2. Maintenance and operating manuals shall be bound in three-ring, hardcover, plastic binders. Deliver to the City under a letter of transmittal and copy the Electrical Engineer.

E. Equipment parts: The Contractor shall retain and be responsible for the safe keeping of all parts and portable equipment such as keys, locks, adapters, locking clips, lamps nuts, bolts, inserts, etc. until required for installation. Upon final completion of contract work remaining parts shall be delivered to the City or the authorized representative.

F. Electrical Equipment: The Contractor shall be responsible for all the safe keeping of all electrical equipment (panels, breakers, light fixtures, conduit, wire and cables, etc.) not permanently installed and coordinate the security conditions with the City Project Manager.

G. Record Drawings:

1. Provide and maintain in good order at the job site a complete set of electrical construction documents and labeled “As Built Documents”. Changes to the contract to be clearly recorded on this set of documents. No pay request by the Contractor will be granted without verification that the job site documents are up-to-date and current with the project construction. At the end of the project, the Contractor shall transfer all changes to one clean set of construction documents and delivered unfolded to the City Project Manager.

2. The actual location and elevation of all buried lines, boxes, stub-outs and other provisions for future connections shall be referenced to clearly established base lines and to approved bench marks.

3. The Contractor shall keep the "record" prints up to date and current with all work performed.

1.03 GENERAL SUMMARY OF ELECTRICAL WORK

A. The specification and drawings are intended to cover a complete and operable installation of the electrical systems. The omission of expressed reference to any item of labor or material for the proper execution of the work in accordance with present practice of the trade shall not relieve the contractor from providing such additional labor and materials.

B. Refer to the drawings and shop drawings of other trades for additional details which affect the proper installation of this work. Diagrams and symbols showing electrical connections are diagrammatic only. Wiring diagrams do not necessarily show the exact physical arrangement of the equipment.

C. Before submitting a bid, the Contractor shall familiarize themselves with all features of the site drawings which may affect the execution of the work. No extra payment will be allowed for failure to obtain this information.

D. If there are omissions or conflicts between the drawings and specifications, clarify these points with the Engineer before submitting bid.

1.04 LOCATIONS OF EQUIPMENT

A. The drawings indicate diagrammatically the desired locations or arrangements of conduit runs, pull boxes, light fixtures, equipment, etc., and are to be followed as closely as possible. Proper judgment must be exercised in executing the work so as to secure the best possible installation in the available space and to overcome local difficulties due to space limitations or interference of structure conditions encountered. At no time shall the placement of equipment or devices create a condition that is not allowed by the California Electrical Code or local jurisdiction.

B. In the event change of locations for equipment or devices are necessary due to developed conditions in the building construction or rearrangement of furnishings or equipment the change shall be made without cost. This assumes that the change is ordered before conduit runs or cables have been installed and work directly connected to same is installed and no extra materials are required.

C. The contractor shall coordinate the location of all utility vaults, pull boxes, transformer pad or slab box with the service utility agencies prior to construction.

D. Coordinate and cooperate in every way with other trades in order to avoid interference and assure a satisfactory job.

E. Prior to starting any underground work the contractor shall notify DIG ALERT at 811 and request an underground infrastructure search and identify report.

1.05 QUALITY ASSURANCE

A. Work and materials to be in full accordance with the latest rules and regulations of the California Code of Regulations Title 24, Part 3 "California Electrical Codes", Title 8 "Division of Industrial Safety", the National Electrical Code, and other applicable Federal and State laws and regulations.

B. All material and equipment shall be new and be delivered to the site in unbroken packages. All material and equipment shall be listed and labeled by Underwriters Laboratories or other recognized testing laboratories, where such listings are available. Comply with all installation requirements and restrictions pertaining to such listings.

C. Work and material shown on the drawings and in the specifications are new and included in the contract unless specifically indicated as existing or N.I.C. (not-in-contract).

D. Keep a copy of all applicable codes available at the job site at all times while performing work under this section. Nothing in plans or specifications shall be construed to permit work not conforming to the most stringent of codes.

1.06 CLEANING EQUIPMENT, MATERIALS, PREMISES

All parts of the equipment shall be thoroughly cleaned of dirt, rust, cement, etc., and all cracks and corners scraped out clean.

1.07 JOB CONDITIONS - PROTECTION

Protect all work, materials and equipment from damage from any cause and provide adequate and proper storage facilities during the progress of the work. All electrical equipment shall be stored in a weather-tight structure. Provide for the safety and good condition of all the work until final acceptance of the work by the City and replace all damaged or defective work, materials and equipment before requesting final acceptance.

1.08 CUTTING AND PATCHING

Perform cutting and patching of the construction work which may be required for the proper installation of the electrical work. Patching shall be of the same material, thickness, and workmanship and finish as existing. Match the surrounding work to the satisfaction of the CITY.

1.09 IDENTIFICATION

A. Panelboards, circuit breakers, relays, time switches, contractors, and other apparatus used for the operation or control of circuits, light fixtures, or equipment shall be properly identified by means of descriptive nameplates or tags permanently attached to the apparatus and wiring.

B. Nameplates shall be engraved laminated phenolic. Shop drawings with dimensions and format shall be submitted to the Engineer before installation. Attachment to equipment shall be with escutcheon pins, rivets, self-tapping screws or machine screws. Self-adhering or adhesive backed nameplates shall not be used.

C. Provide black-on-white laminated plastic nameplates engraved in minimum 1/4" high letters to correspond with the designations on the drawings. Provide other or additional information on nameplates where indicated.

D. Branch circuits shall be tagged in panelboards. Tags may be made of pressure sensitive plastic or embossed, self-attached, stainless steel or brass ribbon.

E. Cardholders and cards shall be provided for circuit identification in the panelboard. Cardholders shall consist of a metal frame retaining a clear plastic cover permanently attached to the inside of panel door. List of circuits shall be typewritten on card. Circuit description shall include circuit name, area, and type of connected load.

F. Junction and pull boxes shall have covers marked with circuit numbers according to panel schedule. Data shall be lettered in a conspicuous manner with a color contrasting to finish.

1.10 TESTING

A. The Contractor shall provide all instrumentation and tests on the electrical system and equipment as hereinafter described. The test shall be performed after the completion of all electrical systems. All tests shall be recorded and documented and submitted to the Engineer for review.

1. Isolating Grounds: In the event that low resistance grounds are found in the system, they shall be isolated and located by testing each circuit individually as outlined above. Make proper corrections to restore the resistance values to an acceptable value.

B. Method of obtaining ground resistance shall be in accordance with the latest edition of the James G. Biddle (Plymouth Meeting, Pennsylvania) manual published on this subject.

1. Perform "fall-of-potential" tests on each grounding electrode of system per IEEE Standard No. 81, Section 8.2.1.5. When suitable locations for test rods are not available, a low resistance dead earth or reference ground will be utilized.

2. Perform the two-point method test per IEEE Standard No. 81, section 8.2.1.1, to determine the ground resistance between the main grounding system and all major electrical equipment frames, system neutral, and/or derived neutral points.

C. All instrumentation and personnel required for testing shall be furnished by the Contractor.

1.11 ASBESTOS, POLYCHLORINATED BIPHENYL (PCB) OR HAZARDOUS WASTE

It is understood and agreed that this contract does not contemplate the handling of asbestos, PCB or any hazardous waste material. If asbestos, PCB or any hazardous waste material is encountered, notify the Owner immediately. Do not disturb, handle or attempt to remove.

1.12 ELECTRICAL WORK CLOSEOUT

A. Prepare the following items and submit to the City Project Manager before final acceptance.

1. Two copies of all test results as required under this section.

2. Two copies of local and/or state code enforcing authorities' final inspection certificates.

3. Copies of as-built record drawings as required under the General conditions, pertinent Division One Sections and Electrical General Provisions.

4. Two copies of all receipts transferring portable or detachable parts to the Owner when requested.

5. Notify the Engineer in writing when installation is complete and that a final inspection of this work can be performed. In the event any defect or deficiencies are found during this final inspection they shall be corrected to the satisfaction of the Landscape Architect, Engineer and the City Project Manager before final acceptance can be issued.

B. The Contractor shall complete the following work before any electrical equipment is energized:

1. All equipment shall be permanently anchored.

2. All lug connections shall be tightened per manufacturer's instructions.

3. All ground connections shall be completed and identified. Perform and successfully complete all required megger and ground resistance tests.

4. All feeders shall be connected and identified.

5. The interiors of all electrical enclosures including the wiring terminals shall be cleaned of all loose material and debris, paint, plaster, cleaners or other abrasive's overspray removed and equipment vacuumed clean.

END OF SECTION

SECTION 016050
BASIC ELECTRICAL MATERIALS AND METHODS

PART I - GENERAL

1.01 SCOPE

A. Work Included: All labor, materials, appliances, tools, equipment, facilities, transportation and services necessary for and incidental to performing all operations in connection with furnishing, delivery and installation of the work of this Section, complete as shown on the drawings and/or specified herein. Work includes, but is not necessarily limited to the following.

1. Examine all other sections for work related to those other sections and required to be included as work under this section.
2. General provisions and requirements for electrical work.

PART 2 - PRODUCTS

2.01 CONCRETE PULLBOXES 2'-0" X 3'-0" AND LARGER

A. Each concrete pre-cast section shall be identified by having the manufacturer's name and address cast into an interior face or permanently attached thereto. Pull boxes intended for public utility systems shall meet the individual utility requirements. Oldcastle Precast Products, Associated Concrete Products-Quikset, Brooks Products or equal.

B. Pullboxes shall have deep recess conduit knockout concrete extensions at two opposite end walls. Additional shallow recess knockouts shall be provided on the other two walls for conduit entrances.

C. Pullboxes shall be provided one pre-cast concrete 6" extension grade ring "tongue and groove" mating surfaces to ensure rigid assembly.

D. Pullbox sizes shall be as indicated on drawings but in no case less than required by applicable codes. Minimum depth of the pullbox shall not be less than 30".

E. The pullbox floor sump shall extend through the concrete floor into the gravel bedding, below the pullbox.

F. Cover and frame assemblies:

1. Traffic rated cover shall be hot dip galvanized steel flush fitting with threaded flush, slotted head, stainless steel studs.
2. Top ring frame shall be hot dip galvanized steel angle frame where the pullbox is installed in paving or concrete work. Assembly shall be rated for H-20 Bridge loading.
3. Top ring frame shall be armor bank type where the pull box is installed in exposed earth or landscaping. Assembly shall be rated for H-10 loading.
4. Covers for 2'-0" x 3'-0"pullboxes shall be a single plate assembly Quikset #TE-1000 series or equal.
5. Covers for 3'-0" x 5'-0" pullboxes shall be double leaf, torsion spring-assisted hinged assembly. Quikset #TL-400 Series or equal.
6. Covers shall be permanently marked indicating boxes use (i.e.: Electric, Fire Alarm, Signal, Telephone, Lighting, etc.)

G. Furnish complete with galvanized pull irons, cable racks, hooks and porcelain insulator cable cradles.

H. Provide a drainage sump, 6" diameter minimum, with a cast iron grate over the sump.

2.02 CONCRETE PULL BOXES SMALLER THAN 2'-0" X 3'-0"

Boxes shall be reinforced concrete with base and drainage sump. Provide steel bolt down traffic cover permanently marked indicating the system installed.

2.03 RELAYS AND CONTACTORS

A. Contactors and/or Relays

1. Contactors and relays for control of lighting, feeders and panels shall be 600 volt A.C., electrically operated, and mechanically held units, open type for panel mounting with number of poles and of size as indicated on the drawings. Provide auxiliary control relay for operation of each contactor or relay with a control circuit as described on the plans.
2. Contactors and relays shall be Automatic Switch Co. (ASCO) Bulletin #920 series for 2 and 3 pole, and Automatic Switch Co. Bulletin 917 Series for contactors and relays containing 4 or more poles. Coil control circuit shall be independently fused, sized to protect coil.
3. Contactors and relays shall be equipped with a switch, in the proper configuration, to disconnect the control circuit controlling the coil of the respective device. Control circuit disconnect switch shall be labeled showing function of device.

2.04 CONCRETE WORK

A. Portland Cement Concrete:

1. ASTM C150, Type II, Low Alkali Cement. Composed of Portland cement, course aggregate, fine aggregate, and water. See Division 3 of these specifications for further concrete requirements.
    a. Concrete for use as electrical equipment footings, lighting pole bases and equipment slabs on grade, concrete shall attain minimum 28-day compressive strength of 3000 psi, using not less than 5 sacks of cement per cu. yd. of wet concrete.
    b. Concrete for duct/conduit encasement, the minimum 28-day compressive strength shall be 2000 psi.
    c. Mix shall obtain a 6" slump, measured with standard slump cone per ASTM C143.
2. Coarse Aggregate: Uniformly graded between maximum size not over 1-1/2" and not less than 3/4" and minimum size #4, crushed rock or washed gravel. For concrete encased ducts only, max. aggregate size shall be 1/2".
3. Fine Aggregate: Clean, natural washed sand of hard and durable particles varying from fine to particles passing 3/8" screen, of which at least 12% shall pass 50 mesh screen.

B. Water: Clean and free from deleterious quantities of acids, alkalis, salts, or organic materials.

C. Reinforcement:

1. All reinforcing steel shall be placed in conformance with Title 24, Part 2, Chapter 26, Section 2607 and Building Code requirement for reinforced concrete (ACI 318).
2. Reinforcing bars shall conform to Title 24, Part 2, Chapter 26, Section 2603(f) and requirements of A.S.T.M.A-615 grade 60, or ASTMA A-706 grade 60 for bars requiring welds except #3 and #4 bars may be grade 40.
3. All reinforcing bar bends shall be made cold.
4. Welded wire fabric shall conform at A.S.T.M. A-185.

D. Form Material: For exposed work, use PS 1 "B-B Concrete Form" plywood forms, or equal. Elsewhere, forms may be plywood, metal, or 1" x 6" boards. Forms for round lighting pole bases shall be sono-tube.

PART 3 - EXECUTION

3.01 CONCRETE PULLBOXES

A. Excavate for installation of precast structures and remove excess excavated material from the site. Saw cut existing paving and concrete as required for excavation.

B. Provide a minimum of 6" deep bedding base of crushed rock 3/8" - 1/2" size in the bottom of the excavation. Bedding shall be level and well compacted by a minimum of four passes with a plate type mechanical vibrator.

C. Backfill and compact earth around precast structure after installation of the structure to 90% minimum compaction in 12" lifts. Replace paving concrete, landscaping above structure to match existing.

D. Install precast structures per manufacturer's recommendations to provide a dry watertight installation. Set covers flush with existing grade or finish surface. Where precast structure is installed in pedestrian walkway or vehicular traffic way with a sloping finish grade, slope cover to match existing.

E. Install structures to avoid surface water drainage flow lines, and existing utilities.

F. Entrances of conduits/ducts shall terminate with end-bells inside the pre-cast structure.

G. Where pullboxes are shown to intercept existing conduit, remove portion of existing conduit approximately 4 ft. back from wall, re-grade and excavate conduit entrance and extend existing conduit into pullbox.

H. Provide 10' long x 3/4" diameter copper clad, steel, driven ground rods through the floor of the precast structure. Ground rod shall extend 6" above the floor line. Where rock bottom is encountered, bury ground rod in horizontal trench with projection into precast structure. Seal off openings around ground rod.

I. Ground permanently and effectively together all metal equipment cases, cable racks, etc., with #4 bare copper bonding conductor. Provide Underwriters Laboratory listed compression bonding fittings at each ground connection.

3.02 GROUNDING (ADDITIONAL REQUIREMENTS)

A. Grounding shall be executed in accordance with all applicable codes and regulations, both of the State of California and local authorities having jurisdiction.

B. Each pull box or any other enclosure in which several ground wires are terminated shall be equipped with a ground bus secured to the interior of the enclosure. The bus shall have a separate lug for each ground conductor. No more than one conductor shall be installed per lug.

C. The maximum resistance to ground shall not exceed 5 ohms.

3.03 CONCRETE WORK

A. Concrete work shall be executed in accordance with all applicable codes and regulations of the California Code of Regulations, Title 24, Part 2, and Chapter 26. See also Division 3 of these specifications.

B. Form

1. Space forms properly with spreaders and securely tie together. Do not use twisted wire form ties. Keep forms wet to prevent joints from opening up before concrete is placed. Replace improper construction as directed. Do not use wood inside forms.

2. Build in and set all anchors, dowels, bolts, sleeves, iron frames, expansion joints and other materials required for the electrical work. Place all items carefully, true, straight, plumb, and even.

3. Carefully remove all exposed forms. Cut nails and tie-wires below face of concrete and fill all holes. Rubbish will not be allowed to remain in, under, or around concrete.

C. Mixing: Use batch machine mixer of approved type. After ingredients are in mixer, mix for at least 1-1/2 minutes.

D. Transit Mixing: In lieu of mixing at site, transit mixing may be used if rate of delivery, haul time, mixing time, and hopper capacity is such that concrete delivered will be placed in forms within 90 minutes from time of introduction of cement and water to mixer.

E. Placing of Concrete:

1. Before placing concrete, remove wood, rubbish, vegetable matter and loose material from inside forms. Thoroughly wet down wood forms to close joints.

2. Clean reinforcement; remove paint, loose rust, scale and foreign material. Bars with bends not called for will be rejected. Hold securely in place to prevent displacement. Lap bar splices 30 diameters, min; lap fabric one mesh min. Tie intersections, corners, splices with 16 ga. annealed wire, or as otherwise called for.

3. Place concrete immediately after mixing. Do not use concrete that has begun to set; no tempering will be allowed. If chuting is used, avoid segregation. In placing new concrete against existing concrete, use bonding agent per manufacturer's directions.

4. Give careful and thorough attention to curing of concrete. Keep concrete and forms wet for a minimum of 10 days, after placing concrete.

F. Concrete Finish:

1. Finish of Exposed Concrete: Horizontal surfaces, steel troweled monolithic finish; vertical surfaces, smooth and free of fins, holes, projection, etc.

2. Exposed pedestal bases shall be filled and sack finished to a smooth finish.

END OF SECTION

SECTION 016111
CONDUIT AND WIRE

PART 1 - GENERAL

1.01 SCOPE

A. Work Included: All labor, materials, appliances, tools, equipment, facilities, transportation and services necessary for and incidental to performing all operations in connection with furnishing, delivery and installation of the work in this Section, complete as shown on the drawings and/or specified herein. Work includes, but is not necessarily limited to the following:

1. Examine all other sections for work related to those other sections and required to be included as work under this section.
2. General provisions and requirements for electrical work.

PART 2 - PRODUCTS

2.01 Conduit

A. Rigid galvanized steel conduit: Hot-dip galvanized, zinc coated. Threads shall be galvanized after fabrication. Couplings, connectors and fittings shall be threaded.

B. Electrical metallic tubing: Galvanized. Couplings and connectors, seamless steel construction and of the setscrew or watertight compression type with factory-applied permanently attached insulated throat. Thomas & Betts Co. #5123 or #5031 Series or approved equal connectors and #5120 or #5030 Series or equal couplings.

C. Flexible conduit. Galvanized steel. Connector shall be screw-in type with factory-applied permanently attached insulated throat. Bridgeport #520-DCI/521-DCI series or equal by Efcor.

D. Liquid-tight flexible conduit. Sealtite Type U.A. with Appleton Series "ST" connectors.

E. Nonmetallic conduit: Polyvinyl chloride, Schedule 40.

2.02 WIRE AND CABLE

A. All wire and cable shall be copper, 600 volt, #12 AWG minimum unless indicated otherwise. Conductors #10 AWG and smaller shall be solid. Conductors #8 AWG and larger shall be stranded. Type of insulation as noted on drawings and as follows:

1. Type THHN/THWN insulation used for #4 AWG and smaller.
2. Type THHN/THWN insulation used for #2 AWG and larger.
3. Type THHN/THWN used for all panel feeders and service conductors.
4. Type THHN/THWN insulation used for circuit conductors installed in lighting fixture raceways, for conductors connected to the secondary of led drivers or other hot locations.
5. Type THHN/THWN insulation shall be used where conductors are installed in conduit exposed to the weather.
6. The following color code for branch circuits:

   Neutral….White (Tape feeder neutrals with white tape near connections) where separate neutral conductors are indicated for branch circuits, color code the white neutral conductor with a colored stripe corresponding to the phase of the respective line conductors.

   a. Normal Power
      120/240 Voltage;

      Ground – Green, Phase A – Black, Phase B – Red
7. Feeders identified as to phase or leg in each panelboard with printed identifying tape.

B. Aluminum Conductors (600 Volt or Less Only): Aluminum conductors are not approved for use on the project.

PART 3 - EXECUTION

3.01 TRENCHING, FOOTINGS, SLEEVES

A. Provide trenching, concrete encasement of conduits, backfilling, and compaction for the underground electrical work, in accordance with applicable sections of this specification.

B. Provide footings for all post and/or pole-mounted lighting fixtures. Concrete shall conform to the applicable sections of this specification.

C. Provide sleeves for raceways and conduit passing under any street or roadway.

3.02 GROUNDING

A. Grounding shall be executed in accordance with all applicable codes and regulations, both of the State of California and local authorities having jurisdiction.

B. Where nonmetallic conduit is used in the underground distribution system, the Contractor shall install the proper sized copper ground wire in the conduit with the feeder for use as an equipment ground. The electrical metallic raceway system shall be grounded to this ground wire.

C. The maximum resistance to ground shall not exceed 5 ohms.

D. Where equipment bonding ground wire is installed or where nonmetallic or flexible conduit is used for branch circuit wiring, a green insulated, copper ground wire, sized in accordance with the following table, shall be installed. Install ground wire in each conduit with phase conductors. If the circuit conductors have been upsized due to voltage drop, the equipment ground wire shall been upsized proportionately.

1.

Branch Circuit Protection	Minimum Ground Wire Size
15 Amp	#12
20 Amp	#12
30 to 60 Amp	#10
70 to 100 Amp	#8
101 to 200 Amp	#6

E. Each panelboard, pull box or any other enclosure in which several ground wires are terminated shall be equipped with a ground bus secured to the interior of the enclosure. The bus shall have a separate lug for each ground conductor. No more than one conductor shall be installed per lug.

F. The interior metal water piping system shall be bonded to the electrical equipment.

3.03 CONDUIT

A. The sizes of the conduits for the various circuits shall be as indicated on the drawings and as required by code for the size and number of conductors to be pulled therein. Conduits to be concealed except as noted otherwise.

B. PVC Schedule 40 nonmetallic conduit shall be used for all underground runs unless specifically noted or specified otherwise. Nonmetallic conduit shall not be run exposed. End bells shall be provided at conduit terminations.

C. Risers on underground conduit runs shall be PVC Schedule 40 below grade and rigid galvanized steel where the run turns up above finished floor.

D. Conduit Installation:

1. Underground conduits entering concrete pullboxes shall enter from the bottom of the pullbox unless indicated otherwise. Provide end bell fitting on the end of each conduit 2" or larger entering the pullbox. Provide waterproof sealant after conductors have been installed.

2. Provide metallic or plastic caps on all conduits during construction until installation of conductors.

3. Provide all trenching, excavation, shoring and backfilling required for the proper installation of underground conduits. Make trenches a minimum of 6” wider than the duct bank.

4. Install underground conduit, except under buildings, not less than 24" below finished grade in non-traffic areas and 30" below finished grade in traffic areas, including roads and parking areas. Install long radius bends in all underground conduits in excess of 100 feet long.

5. Provide a yellow magnetic detector tape over the entire length of all underground conduits. Place tape in backfill at a depth not to exceed 12 inches below finish grade or as required by the manufacturer.

6. From each new pedestal cabinet that is installed, stub out underground from the pedestal a minimum of four 3/4" conduits to the nearest open landscape space or other accessible location and cap for future use.

7. Conduits which are installed at this time and left empty for future use shall have polyvinyl rope left in place for future use.

3.04 WIRE AND CABLE

A. Branch circuit and fixture joints for #10 AWG and smaller wire shall be made with UL-approved connectors listed for 600 volts, approved for use with copper and/or aluminum wire. Connector to consist of a cone-shaped, expandable coil spring insert, insulated with a nylon shell and 2 wings placed opposite each other to serve as a built-in wrench or shall be molded one-piece as manufactured by "Scotchlok."

B. Branch circuit joints of #8 AWG and larger shall be made with screw pressure connectors made of high strength structural aluminum alloy and UL-approved for use with both copper and/or aluminum wire as manufactured by Thomas & Betts. Joints shall be insulated with plastic splicing tape, half-lapped and at least the thickness equivalent to the conductor insulation. Tapes shall be fresh and of quality equal to Scotch.

C. Use U.L. listed pulling compound for installation of conductors in conduits.

D. All splices in exterior pull boxes and landscape light fixtures shall be cast resin encapsulated. Power conductor splices - 3M Scotchcast Series 82/85/90; Plymouth or equal. No underground splices shall be made in control or signal circuits.

E. Neatly group and lace all wiring in panelboards with plastic ties at 3" on centers. Tag all spare conductors.

END OF SECTION

SECTION 016160
METER PEDESTAL AND PANELBOARD

PART 1 - GENERAL

1.01 SCOPE

A. Work Included: All labor, materials, appliances, tools, equipment necessary for and incidental to performing all operations in connection with furnishing, delivery and installation of the work of this Section, complete, as shown on the drawings and/or specified herein. Work includes, but is not necessarily limited to the following:

1. Examine all other specification sections and drawings for related work required to be included as work under Division Sixteen.

2. General provisions and requirements for electrical work.

PART 2 - PRODUCTS

1.02 PEDESTAL

A. The meter pedestal shall be by V.I.T. Products, Inc. Model No. MPS-A16-10K-TPC.

B. The meter pedestal shall be made entirely of stainless steel, #4 brushed finish, utilizing all welded construction providing vandal and weather resistance. No fasteners except sealing screws shall be removable by external access.

C. The metering section shall be a side swing style and must be pad-lockable and sealable and have an integral hinged viewing window for access to meter. The side swing top shall fully expose the meter compartment for ease of setting the meter and access to the test blocks.

D. Meter socket type shall meet the requirements of by the serving utility company.

E. The service pedestal shall be rated for operation at 10K minimum (AIC) amps interrupting capacity. Verify the maximum available fault current with the serving utility company and notify the Engineer if it exceeds this value.

F. Panelboard shall be 100 amp, 120/240 volt, single phase, 3 wire, S/N. or as specified on the drawings.

G. Pedestal enclosure shall provide space provisions to house relays, time clocks or other control devices.

H. Panelboards shall be painted by the manufacturer to the color as specified by the City of Rancho Mirage.

2.02 CIRCUIT BREAKERS

A. Breakers shall have a minimum short circuit interrupting rating of 10,000A symmetrical for panelboard voltages thru 240 volt or as specified on the drawings. In no case shall the interrupting rating be less than the bus's withstand rating unless noted otherwise on the drawings or the maximum available fault current with the serving utility company.

B. Panelboards and circuit breakers shall be products of the same manufacturer.

C. Circuit numbers of breakers shall be black-on-white micarta tabs or other previously approved method. Circuit number tabs which can readily be changed from front of panel will not be accepted. Circuit number tabs shall not be attached to or be a part of the breaker.

D. Where two or three pole breakers occur in the panels, they shall be common trip units. Single pole breakers with tie-bar between handles will not be accepted.

E. Panelboard circuit breakers shall be plug on type.

F. Provide engraved nameplate on each panelboard indicating its designation and system voltage.

2.03 BUSSING

A. Bussing shall be rectangular cross section copper, or sliver or tin-plated aluminum. Bussing shall be the full length of the panel.

B. Bussing shall be braced to withstand symmetrical short circuit ratings as follows or as noted on drawings. In no case shall bus short circuit bracing be less than specified circuit breakers:

1. Panelboards: 10,000 amp

C. Each panelboard shall be equipped with a ground bus secured to the interior of the enclosure. The bus shall have a separate lug for each ground conductor. No more than one conductor shall be installed per lug.

D. Provide space and all hardware and mounting attachments for future devices as indicated on the drawings.

PART 3 - EXECUTION

3.01 MOUNTING

A. Meter Pedestal with panelboard shall be mounted to a 6” minimum thick poured concrete base that extends 6” beyond outside dimensions of enclosure with a ½” slope for drainage.

B. Panelboards shall be supplied with the meter pedestal.

C. All branch circuits shall exit out of the bottom of the pedestal. No conduits shall exit from the side or rear of the pedestal.

END OF SECTION

SECTION 016500
LIGHTING FIXTURES

PART 1 - GENERAL

1.01 General

A. Provide light fixtures complete including lamps, drivers, housings and stanchion mount.

B. The catalog numbers included in the description of the various types of lighting fixtures shall be basically considered to establish the type or class of the fixture with a particular manufacturer only. The fixture component materials, accessories, mounting type and all other features required to fulfill the total description of the fixture based on all drawing and specification information shall be complied with regardless of whether or not the catalog number specifically includes these features. If any conflict exists between the catalog number and the description, the Contractor shall either resolve the conflict with the City of Rancho Mirage ("City") prior to submittal of his bid or furnish the fixture to meet the intent as later interpreted by the Engineer without change in contract price.

C. Lighting fixtures shall be of types as indicated in fixture schedule on the drawings.

D. All fixtures of one type shall be of one manufacturer and of identical finish and appearance, unless indicated otherwise on drawings.

E. All fixtures shall be installed per manufacturer's requirements.

1.02 SCOPE

A. Work Included: All labor, materials, appliances, tools, equipment necessary for and incidental to performing all operations in connection with furnishing, delivery and installation of the work of this Section, complete, as shown on the drawings and/or specified herein. Work includes, but is not necessarily limited to the following:

1. Examine all other specification sections and drawings for related work required to be included as work under Division Sixteen.

2. General provisions and requirements for electrical work.

1.03 SUBMITTALS (ADDITIONAL REQUIREMENTS)

A. If requested by the City, provide a sample of any fixture proposed as a substitution for a specified fixture. Sample fixture shall be complete with lamps, cord and plug for 120-volt operation. Fixture shall be delivered to the Engineer's office for review and shall be picked up within ten (10) working days after review comments have been received; any samples left over this time will be discarded by the Engineer. Decision of Engineer regarding acceptability of any fixture is final.

B. Provide complete manufacturer's catalog data information for each light fixture, ballast and lamp.

PART 2 - PRODUCTS

2.01 LAMPS

A. LED modules shall be new, of wattage indicated and shall be provided with the light fixture.

2.02 LIGHT FIXTURES

A. Lighting fixtures shall have all parts and fittings necessary to complete and properly install the fixture. All fixtures shall be equipped with lamps of size and type specified.

B. The fixture to bear Underwriters' label of approval for the wattage indicated.

C. Light fixtures installed outdoors in damp or wet locations shall be U.L. labeled for said location and shall be sealed and gasketed to prevent light leaks, insect and dust accumulation and water entry.

PART 3 - EXECUTION

3.01 LIGHT FIXTURE INSTALLATION

A. The Contractor shall aim the exterior adjustable lighting fixtures after dark in the presence of, and at a time convenient to the CITY and Electrical Engineer.

B. After the exterior light fixtures have been aimed, the Contractors shall weld two spots on each adjustable knuckle, arm and threaded mount.

3.02 LENS AND DIFFUSERS

A. Lens and diffusers shall be completely cleaned of all dust, dirt and fingerprints after the installation of the light fixtures, ceiling, painting, lamps, and prior to occupancy of the facility by the Owner.

END OF SECTION

SECTION 0321413
SOLID CONCRETE INTERLOCKING PAVERS

PART 1 - GENERAL

1.01 SCOPE

- Provide interlocking pavers as indicated on drawings.

  Mortar pavers on to concrete base
- Furnish and install all accessory items as required by the Contract.

1.02 RELATED WORK

- Furnish and place concrete base

1.03 REFERENCES

A. ASTM C936 - "Standard Specification for SOLID CONCRETE INTERLOCKING PAVING UNITS"

B. NCMA-TEK, TEK 87 - "Construction of Concrete Masonry Pavements"

1.04 SUBMITTALS

- Manufacturer's Product data
- Documentation of installer's experience
- Manufacturer's installation instructions

1.05 QUALITY ASSURANCE

- INTERLOCKING PAVERS:

  1. Manufacturer: As specified on the plans. Company specializing in the manufacturing of solid concrete interlocking pavers for a period of five (5) years. Single layer production only. Multi-layer production is unacceptable.

  2. Installer: Company specializing in the installation of solid concrete interlocking pavers with three (3) years experience (and accredited by the manufacturer in relation to the paver type and project requirements).

1.06 MOCK UPS

A. Provide mock-up of pavers under the provisions of Sections 3.02 and 3.03 herein.

B. Size of mock-up shall be determined based on extent of pattern to be adequately shown.

- DELIVERY, STORAGE AND HANDLING

  Deliver pavers in such a manner that no damage occurs during shipping, handling, unloading and storage.
- PROJECT CONDITIONS

  Install pavers only under conditions stipulated in manufacturer's instructions.
- SEQUENCING AND SCHEDULING:

  Coordinate with installation of pavers with work specification as stated herein and with the General Contractor.

1.10 WARRANTY

A. Installation: Installer shall provide a one (1) year written guarantee.

B. Pavers: Manufacturer shall provide a one (1) year written guarantee.

PART 2 - PRODUCTS

2.01 MANUFACTURER

A. INTERLOCKING PAVERS:

As specified on the plans

2.02 MATERIALS

A. Pavers:

1. Cementitious Materials

Portland Cements shall conform to ASTM Specification C-150.

2. Aggregates

Aggregates shall conform to ASTM Specification C-33 for Normal Weight Concrete Aggregate (no expanded shale or light weight aggregates) except that grading requirements shall not necessarily apply.

B. Mortar:

Freshly prepared and uniformly mixed in the ratio by volumes of 1 part cement, 1/2 part lime putty, 4-1/2 parts sand. Conform to UBC Type S, 3500 psi minimum strength. Omit lime putty if plastic type cement is used.

2.02 PHYSICAL REQUIREMENTS

A. INTERLOCKING PAVERS:

1. Compressive Strength

At the time of delivery to the work site, the average compressive strength shall not be less than 8,000 psi with no individual unit strength less than 7,200 psi, with testing procedures in accordance with ASTM Standard C-140.

2. Absorption

The average absorption shall not be greater than 5% with no individual unit absorption greater than 7%.

3. Proven Field Performance

Satisfying field performance is indicated when paving units similar in composition, and made with the same manufacturing equipment as those to be supplied to the Owner, do not exhibit excessive deterioration after at least one (1) year.

2.04 VISUAL INSPECTION

A. All units shall be sound and free of defects that would interfere with the proper placing of unit or impair the strength or permanence of the construction.

B. Minor cracks incidental to the usual methods of manufacture, or chipping resulting from customary methods of handling in shipment and delivery, shall not be deemed grounds for rejection.

2.05 SAMPLING AND TESTING

A. The Owner or his authorized representative shall be accorded proper facilities to inspect and sample the units at the place of manufacture from lots ready for delivery.

B. Sample and test units in accordance with ASTM Method C-140.

2.06 REJECTION

A. In the event the shipment fails to conform to the specified requirements, the manufacturer may sort it, and new test units shall be selected at random by the Owner from the retained lot and tested at the expense of the manufacturer. If the second set of test units fails to conform to the specified requirements, the entire lot shall be rejected.

2.07 EXPENSE OF TESTS

The expense of inspection and testing shall be borne by the Owner unless otherwise agreed.

PART 3 - EXECUTION

3.01 INTERLOCKING PAVERS:

A. PREPARATION

1. A suitable base shall be prepared as specified in related sections of this specification.
2. The base shall be shaped to grade and cross-section, and shall slope toward the center of the median at the rate of 1% minimum and 1-1/2% maximum.
3. The compacted sub-base shall be 3-3/8" (86mm) below final grade, or below the top of the curb, for 2-3/8" (6cm) pavers and 4-1/2" (105mm) below final grade or the top of the curb, for 3-1/8" (8cm) pavers.

B. PLACEMENT

1. The pavers shall be placed in the approved pattern as noted or shown on the drawings.
2. The pavers shall be placed in such a manner that the desired pattern is maintained and the joints between the pavers are nominally 1/8" with no individual gap exceeding 1/4".
3. Use string lines to hold all patterns true.
4. The gaps at the edge of the paver surface shall be filled with standard pavers or with pavers cut to fit.
5. The cutting of pavers, using a double-headed breaker or masonry saw, shall leave a clean edge to the traffic surface.
6. When cutting precision designed areas, a masonry saw shall be used.
7. Pavers to be alternately selected from at least three (3) pallets, working from top to bottom in each pallet stack.
8. Surplus material shall be swept from the surface.

3.03 SEALING

A. All concrete and concrete pavers shall be sealed after curing process is completed.

B. Sealant shall be of a penetrating type, such as *Surebond SB1300*, or equal. Surface coating sealants such as "Thompsons" are not acceptable.

C. Sealant shall remain transparent, with no significant darkening of concrete color or visible sheen after application.

D. Sealant shall be applied per manufacturer's instructions prior to final acceptance of project by the Owner.

PART 4 - CLEAN UP

A. Contractors shall remove all debris associated with his work from the project site on a daily basis. Contractor is responsible for providing proper debris receptacles, or disposing of debris off site.

B. All receptacles or off site disposal must conform to state and local codes. Contractor is responsible for identifying any waste associated with his work which may be deemed as being "hazardous" as defined by the EPA, and disposing of it per EPA regulations.

END OF SECTION

SECTION 0328400
AUTOMATIC IRRIGATION

PART 1 - GENERAL

1.01 SCOPE

- Underground landscape irrigation system, complete with controllers, valves and all required heads, backflow preventers, as indicated on the plans.
- Related work specified elsewhere:
  - Landscape Planting
  - Electrical point of connection (specified on lighting plans)

1.02 GENERAL REQUIREMENTS AND SITE OBSERVATIONS

A. Permits:

Obtain and pay for all construction permits required by governing authorities. Obtain approvals for hookup to water meters or water main.

B. Observations:

Observations will be made by the City. Contractor shall be on site when observations are made. Observation is required for the following:

1. When mainline is installed and pressurized (trench must remain open), a pressure test will be conducted.
2. When irrigation system is complete, prior to plants being installed, a coverage test will be conducted.

1.03 RECORD DRAWINGS

A. Record accurately on one set of black and white prints of the drawings, all changes in the work constituting departures from the original contract drawings, including changes in both pressure and non-pressure lines.

B. Upon completion of each increment of work, transfer all such information and dimensions to the prints. Record changes and dimensions in a legible and workmanlike manner. When the drawings are approved, transfer all information to a set of reproducible drawings supplied at cost by the Landscape Architect.

C. Dimension from two permanent points of reference (buildings, monuments, sidewalks, curbs, and pavement). Post information on as-built drawings day to day as the project is installed. All dimensions noted on drawings shall be 1/4 inch in size.

D. Show dimensional locations and depths of the following:

1. Water point of connection
2. Route of irrigation pressure lines (dimensions maximum 100 feet along routing and all directional changes)
3. Gate or Ball Valves
4. Irrigation control valves (buried only)
5. Quick coupling valves
6. Routing of control wires
7. Other related equipment (as may be directed by the Landscape Architect).

E. Maintain as-built drawings on site at all times.

F. Make all changes to reproducible drawings in ink (no ballpoint pen). Make changes in a graphic quality equal to the original drawing.

1.04 CONTROLLER CHARTS

A. As-built drawings shall be approved by Landscape Architect before charts are prepared.

B. Provide one controller chart of the maximum size controller door will allow, for each controller supplied, showing the area covered by automatic controller.

C. The chart shall be a reduction of the actual as-built system drawing. If the controller sequence is not legible when the drawing is reduced, enlarge it to a size that will be readable when reduced.

D. Chart shall be blackline print and a different pastel color used to show area of coverage for each station.

E. When completed and approved, hermetically seal the chart between two pieces of plastic, each piece being a minimum 20 mils thick.

F. Charts shall be completed and approved prior to final inspection of the irrigation system.

1.05 OPERATION AND MAINTENANCE MANUALS

A. Prepare and deliver to the CITY within five (5) calendar days prior to completion of construction, all required and necessary descriptive material in complete detail and sufficient quantity, properly prepared in four (4) individually bound copies. Describe the material installed in sufficient detail to permit operating personnel to understand, operate and maintain all equipment. Include spare parts lists and related manufacturer information for each equipment item installed. Each manual shall include the following:

1. Index sheet stating subcontractor's address and telephone number.
2. Duration of guarantee period.
3. List of equipment with names and addresses of manufacturer's local representatives.
4. Complete operating and maintenance instructions on all major equipment.

B. In addition to the maintenance manuals, provide the maintenance personnel with instructions for major equipment and show written evidence to the Landscape Architect at the conclusion of the project that this service has been rendered.

1.06 CHECKLIST

A. Complete the following checklist at the end of the project, using the format shown:

1. Plumbing permits (if none are required, so note)
2. Material approvals
3. Pressure line test (by whom and date)
4. As-built drawings completed (received by and date)
5. Controller charts completed (received by and date)
6. Materials furnished (received by and date)
7. Operation and maintenance manuals furnished (received by and date)
8. System and equipment operation instructions (received by and date)
9. Manufacturer warranties, if required (received by and date)
10. Written guarantee (received by and date)
11. Lowering of heads in lawn areas (if applicable)

B. Forward signed and dated checklist to the CITY before final acceptance of the project.

1.07 MATERIAL LIST

A. Submit complete material list prior to performing any work. Submit catalog data and full descriptive literature whenever the use of items, different from those specified, is requested. Submit notarized certificate by plastic pipe and fitting manufacturer indicating that material complies with specifications, unless material has been previously approved.

B. Submit material list using the following layout: (double spaced between each item).

Item No.	Description	Manufacturer	Model No.
1.	Pressure supply lines	Lasco	Sch 40
2.	Emitter	Rainbird	XBT-20
3.	Etc.	Etc.	Etc.

C. Equipment or material installed or furnished without the prior approval of the CITY may be rejected and such materials removed from the site at no expense to the Owner.

D. Approval of any items, alternatives or substitutions indicates only that the product(s) apparently meet the requirements of the drawings and specifications on the basis of the information or samples submitted.

E. The Contractor is responsible for performance of substituted items. If substitution proves to be unsatisfactory, replace it with originally specified item, at no cost to the Owner.

1.08 GUARANTEE

Submit written guarantee, in approved form, that all work showing defects in materials or workmanship will be repaired or replaced at no cost to the Owner for a period of one (1) year from date of acceptance by the Owner.

PART 2 - PRODUCTS

2.01 GENERAL PIPING AND SLEEVING

A. Pressure supply line from point of connection through backflow prevention unit will be "Type K copper or brass" or "Class 315 PVC" unless otherwise noted.

B. Pressure supply lines 2½" and larger, downstream of backflow prevention unit will be "Class 200 PVC" unless otherwise noted.

C. Pressure supply lines 2" and smaller, downstream of backflow prevention unit will be "SCH 40 PVC".

D. Domestic supply lines will be "SCH 40 PVC" on sizes 1½" or smaller; 2" or larger will be "SCH 80 PVC".

E. Non-pressure lines will be "Class 200 PVC".

F. Sleeving: All irrigation lines which are installed under driveways, roadways, pool areas, patios, walls or other permanent objects shall be installed inside sleeving. Sleeving shall be schedule 40 PVC with a diameter two (2) times the diameter of the irrigation line.

Top of sleeving under roads and driveways shall be a minimum of 24” below grade; top of sleeving under pedestrian areas shall be a minimum of 12” below grade.

2.02 PLASTIC PIPE AND FITTINGS

A. Solvent Weld Pipe:

Extruded of an improved PVC virgin pipe compound featuring high tensile strength, high chemical resistance and high impact strength. Conform to ASTM D-1784 or D-2241 to meet the requirements of cell classification 12454B for pipe. Compound shall have a 2,000 p.s.i. hydrostatic design stress rating.

B. Rubber Gasket PVC Pipe, Couplings and Fittings:

Conform to ASTM D-1784 Type I, Grade I, 2,000 p.s.i. design stress. Standard dimension ratio for pipe shall be SDR 21 (Class 200). All pipe shall conform to commercial standard CS-256-64 (pressure rated pipe) and National Sanitation Foundation testing laboratories (NSF). Rubber gaskets shall conform to ASTM 1869. All PVC piping shall be white or approved equal. Couplings and fittings shall be furnished by the pipe manufacturer and shall accommodate the pipe with which they are to be used. Couplings shall permit 5 degrees deflection of the pipe at each coupling (2½ degrees each side), without exfiltration or infiltration, cracking or breaking.

C. Install concrete thrust blocking at all changes of direction of pipe and at terminal points according to manufacturer's recommendations on all rubber gasket piping.

D. All pipe and fittings shall bear manufacturer's name, nominal pipe size, schedule or class, pressure rating p.s.i., NSF (National Sanitation Foundation) and date of extrusion.

E. Make solvent cement joints for plastic pipe fittings as prescribed by manufacturer.

F. All fittings shall be standard weight, schedule 40.

G. All Fittings:

Injection molded of an improved PVC fitting compound featuring high tensile strength, high chemical resistance and high impact strength. Conform to ASTM D-1784, to meet the requirements of cell classification 12454B. Where threads are required in plastic fittings, these shall also be injected molded. All tees and ells shall be side gated.

H. All threaded nipples shall be standard weight Schedule 80, with molded threads.

2.03 COPPER PIPE AND FITTINGS

A. Copper Pipe:

1. Type K, hard tempered, ASTM B88, with fittings of wrought solder joint type in accordance with ANSI B16.22.

2. Solder joints with silver solder, 45% silver, 15% copper, 16% zinc, 24% cadmium and solidus at 1,125 degrees F. and liquids at 1,145 degrees F., conforming to AST B206 and FS QQ-B-655C.

2.04 BRASS PIPE AND FITTINGS

A. Brass pipe shall be 85% red brass, American National Standard Institute (ANSI) Schedule 40 screwed pipe.

B. Fittings shall be medium brass, screwed, 125 pound class.

2.05 MANUAL CONTROL VALVES

A. Angle type valve shall be all bronze, with swivel type replaceable seating members and with unions on discharge side.

B. Anti-syphon type valve shall be all bronze, or of corrosion-resistant material with swivel type replaceable seating members and an approved vacuum breaker as an integral part of assembly.

C. Control valves shall be as indicated on drawings, installed according to construction detail.

2.06 BACKFLOW PREVENTION UNITS

A. Type A backflow preventer shall operate on a "reduced pressure" principle. Maintain pressure differentials by two (2) spring-loaded diaphragm actuated differential pressure relief valves. Failure of any part vital to prevention of backflow shall be indicated by a continuous discharge from relief valve opening. Moving parts shall be easily removed and replaced without disconnecting preventer. Fabricate parts of corrosion-resistant materials. Unit shall operate automatically on line pressure without any manual control or assistance. Equip unit with gate valves. Maximum loss through unit shall be 8.2 p.s.i. at 160 g.p.m.

B. Type B pressure vacuum breakers 2½" and larger shall consist of two (2) approved check valves, all brass vacuum breakers, inlet and discharge gate valves and field test cocks. Check valve bodies shall have pure zinc coated interior surfaces, all brass closing members, soft neoprene discs and stainless steel hinge pins.

C. Type C pressure vacuum breakers 2" and smaller shall consist of approved check valves, vacuum relief inlet and discharge gate valves, field test cocks and shall be installed a minimum of 12" above the highest head served.

D. Type D atmospheric vacuum breakers shall have bronze bodies, with check valve proppets of molded polyethylene, angle type.

2.07 GATE or BALL VALVES (as specified on the plans)

A. Gate valves 3" or smaller shall be the following, unless otherwise noted:

1. 150-pound saturated stream rated
2. Brass body - ASTM B62
3. Screwed joints
4. Non-rising stem
5. Screwed bonnet
6. Solid disc
7. Ball valves shall be full-ported, with lever
8. Gate valves shall be equipped with handwheel

B. All valves shall be housed in a box as detailed, except in traffic areas, where box shall be concrete with cast iron lid, of a type suitable for traffic installation.

2.08 QUICK COUPLING VALVES

A. Body of valve shall be red brass with a wall thickness guaranteed to withstand normal working pressure of 150 p.s.i. without leakage with 3/4" female threads opening at base.

B. Construct valve so it can be operated only with a special connecting device known as a coupler, designed for that purpose. Coupler is inserted into valve and a positive, watertight connection shall be made between coupler and valve. Thread shall be Acme type.

C. Hinge cover shall be of red brass with a rubber-like vinyl cover bonded to it in such a manner that it becomes a permanent type cover, yellow in color.

D. Locate all valves within 12" of hardscape unless otherwise noted.

2.09 CHECK VALVES

A. Swing check valves 2" and smaller shall be of all bronze construction, 100# S.W.P., female I.P.S.

B. Anti-drain valve shall be of plastic construction with soft composition disc and internal parts of stainless steel; spring tension adjustable from 4 PSI to 15 PSI with high flow shut-off.

C. Swing check valves 2½" and larger shall be of cast iron, 150-pound class, with no-slam feature, installed in box of sufficient size with three (3) cubic feet of pea gravel around valve.

2.010 ELECTRIC AUTOMATIC CONTROLLER

A. Automatic controller shall be fully automatic in operation and capable of operating the number of stations of remote control valves, as noted.

B. Controller shall be pedestal or wall-mounted type with a heavy duty watertight case and locking, hinged cover.

C. Controller shall be programmed for various schedules entirely by setting switches and dials, equipped with the following features:

1. An operation switch for each day of the week, for two or three schedules, allowing each station to be scheduled individually as to days of watering.
2. A minutes operation switch for each station with a positive increment range of 1 to 99 minutes. Time sets shall be accurate within 1%.
3. A repeat switch allowing selected schedules to be repeated after completion of the initial watering schedule and allowing repeat operations to be scheduled throughout a 24-hour day.

D. Controller shall have a 110-volt pump starter relay as an integral part.

E. Controller components shall be fused and chassis grounded.

F. Controller shall be equipped with an approved on and off switch for 115-volt service and electrical outlet, located inside housing.

G. The exact location of the controller shall be determined in the field by the CITY before installation. The contractor is responsible for coordinating the electrical service to this location. In the event a conflict prevents this coordination, the CITY shall be notified immediately.

2.14 ELECTRICAL REMOTE CONTROL VALVES

A. Valve shall be spring-loaded, packless diaphragm activated type with plastic body of a normally closed type, equipped with a flow control.

B. Valve solenoid shall be corrosion-proof and constructed of stainless steel molded in epoxy to form one integral unit, 24 volt A.C., 4.5 watt maximum, 500 maximum milliamp in-rush.

C. Valve shall be capable of being operated in the field without electricity at the controller, by a bleeder valve.

D. Install valve in shrub area whenever possible and according to construction detail.

2.15 ELECTRICAL STANDARD VOLTAGE

A. Obtain new electrical meter, if needed, and pay all costs involved.

B. Provide power and connections to the automatic controller. Power point of connection location and design by others.

C. All electrical equipment installed outside building shall be NEMA 3 type, waterproofed for such installation.

D. All low voltage work shall be installed by Subcontractor. Refer to Low Voltage Wiring for additional information.

E. All electrical work shall conform to local codes, ordinances and union authorities having jurisdiction.

2.16 LOW VOLTAGE WIRING

A. Connections between the controller and remote control valves shall be made with direct burial AWG-UF type wire, installed in accordance with valve manufacturer's wire chart and specifications.

B. Wiring shall occupy the same trench and shall be installed along the same route as the pressure supply lines wherever possible and shall be installed before main line wherever possible.

C. Where more than one wire is placed in a trench, the wiring shall be taped together at intervals of 12 feet.

D. All splices shall be made using Scotch Lok Unipack waterproofing sealing packets, Pen-Tite connectors or equal. An expansion loop of 12" shall be provided at each wire connection and directional turn.

E. Sizing of wire shall be according to manufacturer recommendations, in no case less than #14.

F. Use a continuous wire between controller and remote control valves. Under no circumstances shall splices exist without prior approval. Any splices allowed shall be installed in an approved box.

G. All ground wires shall be white.

H. Provide one orange wire from each controller to furthest location in system, to be used as required as a spare (on larger projects only).

2.17 TREE IRRIGATORS

Each tree shall be equipped with fixed flow bubblers for watering as called for, and installed as shown.

2.18 DRIP EMITTERS

A. Single Outlet

Single outlet drip emitters shall have a fully pressure compensating diaphragm constant flow, self-flushing with 10/32” threaded inlet.

2.19 STRAINER AND FLOW CONTROL ASSEMBLIES

A. All drip emitter systems shall be protected by a bronze Y filter strainer of a size as noted on drawings, equipped with a 200 mesh screen and a 1/2" ball valve for flushing.

B. Flow control unit shall consist of a series of flow control with the capability as indicated.

C. Unit shall be equipped with necessary fittings and pressure regulator (line size) for adjusting pressure as indicated on drawings. All fittings and nipples shall be Sch 80 PVC.

D. Unit shall be complete, as indicated.

2.20 FLUSH VALVES

A. Equip all drip emitter systems with a flushing valve assembly located as noted on drawings.

B. Flush valves shall be a 3/4" hose bibb, loose key type, with an inverted nozzle installed in a 12" round plastic box.

C. PVC nipples shall be Sch 80 and installed as shown on drawings.

D. When called for, check valve shall be plastic 100 Class minimum.

2.21 VALVE BOXES

A. Boxes shall be of type, size and material noted on the drawings.

B. When identification numbers are called for, they shall be branded in 2" letters.

2.22 MATERIALS TO BE SUPPLIED

A. Supply as part of this contract the following tools:

1. Two (2) wrenches for disassembling and adjusting each type irrigation head supplied
2. Two (2), 30" irrigation keys for operation of manual control valves
3. Two (2) keys for each automatic controller
4. Ten (10) couplers and matching hose swivels
5. Two (2) keys for opening valve boxes

B. The above equipment shall be turned over to the Owner at the conclusion of the project. Before final inspection can occur, evidence that the Owner has received materials shall be shown to the Landscape Architect.

C. All equipment not indicated in the specifications but called for in construction documents shall be supplied and installed in accordance with the construction detail pertaining to same.

PART 3 - EXECUTION

3.01 INSPECTION SCHEDULE

A. Contractor is responsible for notifying the CITY in advance for the following inspections, according to the time indicated:

1. Pre-job conference - 7 days
2. Pressure supply installation and testing - 36 hrs
3. System layout - 36 hrs
4. Coverage tests - 36 hrs
5. Final inspections - 48 hrs

B. When inspections have been conducted by other than the City of Rancho Mirage ("City") Inspector, show evidence of when and by whom these inspections were made.

C. No inspection will commence without as-built drawings. In the event the Subcontractor calls for an inspection without as-built drawings, without completing previously noted corrections, or without preparing the system for inspection, he shall be responsible for reimbursing the CITY or at current hourly rates plus any transportation costs for the inconvenience. No further inspections will be scheduled until this charge has been paid.

D. The Subcontractor shall be responsible for having a cell phone or sufficient personnel so that directions from the inspection area to the controller of the system can be readily accomplished when performing the final inspection.

3.02 WATER SUPPLY

A. Connections to the existing water meters shall be determined in the field based on as-built drawings. Minor changes caused by actual site conditions shall be made without additional cost to the owner.

3.03 LAYOUT

A. Lay out irrigation heads and make any minor adjustments required due to differences between site and drawings. Any such deviations in layout shall be within the intent of the original drawings, and without additional cost to the Owner.

B. Lay out all systems using an approved staking method and maintain the staking of approved layout.

C. When drip emitter systems are involved, Subcontractor shall layout chalk lines and have same approved before installations.

D. Before starting work on irrigation system, determine that work may proceed without disruption of activities of other trades.

3.04 GRADES

No drip emitter systems shall be installed unless finish grade is within 1/10 foot, plus or minus.

3.05 ASSEMBLIES

A. Coordination of installation of backflow assemblies in shrub areas and at minimum height required by local codes. Backflow shall be installed by CVWD only.

B. Routing of pressure supply lines as indicated on drawings is diagrammatic. Install lines and various assemblies to conform to details on plans.

C. Do not install multiple assemblies on plastic lines. Provide each assembly with its own outlet.

D. Install all assemblies specified herein according to the respective detail drawings or specifications, using best standard practice with prior approval.

E. Assemble brass pipe and fitting, and plastic pipe and threaded fittings, using Teflon dope, applied to the male threads only.

3.06 LINE CLEARANCE

A. All lines shall have a minimum clearance of 4" from each other and 6" from lines of other trades.

B. Do not install parallel lines directly over one another.

C. Non-pressure headers may be installed in same trench when drip emitter system is used.

3.07 TRENCHING

A. Dig trenches and support pipe continuously on bottom of ditch. Lay pipe to an even grade. Trenching excavation shall follow layout indicated and as noted. These dimensions shall be considered below subgrade where lines occur under paved area.

B. Provide minimum cover of 18" on all pressure supply lines 3" and smaller, 18" for all control wire, 12" for non-pressure lines and 10" for drip emitter lines.

C. Drip emitters shall be installed in open ditch or by the laying method to an even grade. Obtain approval from the CITY before laying method can be used. Note: Call Dig Alert, or other pertinent local agency before **any** digging with backhoes or other machinery. Verify existence of any existing utility lines.

3.08 BACKFILLING

A. All backfill shall be coarsely graded sand. Compact backfill to dry density equal to the adjacent undisturbed soil, conforming to adjacent grades without dips, sunken areas, humps or other irregularities.

B. In proper types of soil, the CITY may authorize the use of flooding in lieu of tamping.

C. Under no circumstances shall truck wheels be used for compacting soil.

D. Provide sand backfill a minimum of 6" over and under all paved areas and a minimum of 6" on all other piping.

3.09 FLUSHING THE SYSTEM

A. After all irrigation pipe lines and risers are in place and connected, and prior to installation of irrigation heads, the control valves shall be opened and a full head of water used to flush out the system.

B. Irrigation heads shall be installed only after flushing of the system has been accomplished to the complete satisfaction of the CITY.

3.10 UNDER EXISTING PAVEMENT

A. Piping under existing pavement may be installed by jacking, boring or hydraulic driving. However, no hydraulic driving will be permitted under asphalt paving.

B. Secure permission from owner before cutting or breaking existing pavement. All necessary repairs and replacements shall be approved by Owner, and shall be at no additional cost to Owner.

3.11 IRRIGATION HEADS

A. Install irrigation heads as designated on the drawings.

3.12 ADJUSTING THE SYSTEM

A. Adjust valves, alignment and coverage of irrigation heads.

B. If it is determined that adjustments in the irrigation equipment or nozzle changes will provide proper and more adequate coverage, make all such changes or make arrangements with the manufacturer to have adjustments made, prior to any planting.

C. The system shall be thoroughly flushed after installation of drip emitter type system and then used at full flow capacity. Allow area to become totally saturated. After planting, check system to determine when desired moisture content has been reached, by observing and probing soil. The pressure setting may require several different settings to establish the proper one, or shall be set as directed by manufacturer's representative.

D. These changes or adjustments shall be made without additional cost to the Owner.

E. The entire system shall be operating properly before any planting operations commence.

F. Be responsible for periodically checking operation of system and adjusting or relocating moisture sensing equipment, as necessary. (Maximum of one time.)

G. The Contractor may, at his option, use the system for initial germination, but it is suggested that hand-watering be used for the first two (2) weeks when a drip emitter irrigation system is utilized.

3.13 COVERAGE TEST

Perform a coverage test when the irrigation system is completed in the presence of the City Inspector to determine if the water coverage for tree and shrub areas is complete and adequate. Finish all materials and perform all work required to correct any inadequacies of coverage due to deviations from plans or where the system has been willfully installed as indicated on the drawings when it is obviously inadequate or inappropriate, without bringing this to the attention of the City Inspector. This test shall be accomplished before any planting occurs.

3.14 TESTS

A. Make hydrostatic tests only in the presence of the City Inspector. No pipe shall be backfilled until it has been inspected, tested and approved in writing.

B. Furnish necessary force pump and all other test equipment.

C. Test all pressure supply lines under a hydrostatic pressure of 150 pounds psi for a period of 3 hours.

D. All testing shall be approved prior to the installation of remote control valves, quick couplers or other valve assemblies.

PART 4 - CLEAN UP

A. Contractor shall remove all debris associated with his work from the project site on a daily basis. Contractor is responsible for providing proper debris receptacles, or disposing of debris off site.

B. All receptacles or off site disposal must conform to state and local codes. Contractor is responsible for identifying any waste associated with his work which may be deemed as being "hazardous" as defined by the EPA, and disposing of it per EPA regulations.

GUARANTEE FOR IRRIGATION SYSTEM, ELECTRICAL SYSTEM, PAVERS, AND PALMS

We hereby guarantee the irrigation system, electrical system, pavers, and palms that we have furnished and installed against defects in materials and workmanship, ordinary wear and tear and unusual abuse, or neglect excepted, and that the work has been completed in accordance with the Drawings and Specifications. We agree to repair or replace any or all of our work, together with any other adjacent work which may be displaced by so doing, that may prove to be defective in its workmanship or materials within a period of one (1) year from date of filing the Notice of Acceptance for the below-named Project by the CITY OF RANCHO MIRAGE, at no additional cost to the owner or the CITY. We shall make such repairs or replacements within 14 calendar days following written notification by the Owner. When the immediate repair or replacement of the work is necessary to ensure the public safety and welfare, which would be endangered by continued usage of the facility, such circumstance will be deemed an operational emergency. In the event of such an emergency after the Owner contacts our firm and after authorizing 24 hours to initiate repairs, if we fail to initiate and diligently complete such repairs in a timely manner, the Owner may direct other forces to perform such functions as may be deemed necessary by the Owner to correct work and immediately place the facility back in operational condition. If such procedure is implemented, we shall bear all expenses incurred by the Owner. In all cases, the judgment of the Owner shall be final in determining whether an operational emergency exists. In the event of our failure to make such repairs or replacements within the time specified after receipt of written notice from the Owner (other than an operational emergency), we authorize the Owner to proceed to have said repairs or replacements made at our expense and we will pay the costs and charges therefore upon demand.

PROJECT: _____

LOCATION:_____ SIGNED:_____

ADDRESS: _____ PHONE:_____

A. After the system has been completed, the Contractor shall instruct the CITY'S Public Works Representative in the operation and maintenance of the system and shall furnish a complete set of operating instructions.

B. Any settling of trenches which may occur during the one-year period following acceptance shall be repaired to the Owner's satisfaction by the Contractor without any additional expense to the CITY or the Owner. Repairs shall include the complete restoration of all damage to planting, paving or other improvements of any kind as a result of the work.

END OF SECTION

SECTION 0329000
LANDSCAPE PLANTING

PART 1 - GENERAL

1.01 SCOPE

- Finish grading and shaping of surfaces to receive planting
- Crushed rock ground cover
- Plant materials
- Staking and guying
- Pruning of trees and shrubs
- Maintenance of all planting
- Guarantee
- Related work specified elsewhere:

  Automatic Irrigation

  Landscape Maintenance

1.02 OBSERVATIONS

A. Observations will be made by the CITY. Contractor shall be on the site when observations are made. Request observation by telephone at least two (2) working days in advance of date desired. If the work is not ready for observation when the CITY or Landscape Architect arrives, Contractor may be subject to paying for the Landscape Architect's visit.

B. Observation is required for the following:

1. When grading and soil conditioning has been completed, prior to planting.
2. When trees and shrubs have been spotted for planting, but before planting holes are excavated.
3. When planting and all other specified work has been completed, prior to maintenance period.
4. At end of 90-day maintenance period.

1.03 GUARANTEE

A. All 15 gallon or smaller trees, shrubs and plant material shall be guaranteed for a period of 90 days; 24" box and larger trees shall be guaranteed for a period of one (1) year. All palm trees, regardless of size, shall be guaranteed for one (1) year. All guarantee periods commence from the time of final acceptance by the Owner at the successful completion of the maintenance period.

B. Replace all dead plants and those not in vigorous conditions noted during the maintenance period, as soon as weather permits.

C. Plants used for replacements shall be of same kind and size as originally planted. Plants shall be furnished, planted and fertilized as specified and guaranteed.

D. Frost Damage:

All plants specified are considered appropriate to the local climate, based on accepted industry standards. It is understood that frosts occur on occasion, and, as such, will be treated as a no-fault "act of God." If plant material has been delivered to the site, but not planted, the contractor will replace any dead or damaged plant material at no cost to the Owner. If plant material has been planted per these specifications prior to the frost, then the Owner shall be responsible for cost of replacement of frost-damaged plant material.

PART 2 - PRODUCTS

2.01 MATERIALS

A. Topsoil:

1. Existing soil on the site shall be used as topsoil for planting purposes where possible, but shall be free of debris, oil, weeds, turf roots, and other foreign matter. Contaminated soil shall be removed and replaced with acceptable existing soil or imported soil. Any additional imported Class A top soil needed to make grade and replace existing contaminated planting soil shall be supplied by the contractor and be part of the soil preparation and fine grading pay item of the work.
2. Imported soil shall be sandy textured. Silt plus clay content of this soil shall not be greater than 15 percent by weight. The boron content of this soil shall not be greater than one (1) part per million as measured on the saturation extract. The sodium absorption ration (SAR) shall not exceed 6.0 millimhos per centimeters at 25 degrees Celsius.

B. Fertilizers and Soil Conditioners:

1. Organic amendment shall be nitrolized-mineralized redwood sawdust (.5% actual nitrogen) or nitrolized-mineralized fir sawdust (.8% actual nitrogen) or nitrolized-mineralized fir bark (1% actual nitrogen). Amendment shall be fine textured, having actual minimum 80% passing #8 screen and minimum 95% passing #4 screen. The electrical conductivity (EC) should not exceed 3.0. Salinity shall not be higher than 3.5 millimhos per centimeter at 25 degrees C. as measured by saturation extract conductivity.
2. Commercial fertilizer shall have a minimum of 12 nitrogen, 9 phosphoric acid, 8 potash. Deliver mixed fertilizer in standard bags, marked with weight, analysis and name of manufacturer. Keep fertilizer in dry storage.

C. Plant Materials:

1. All plant materials shall be healthy, well developed representations of their species or varieties, free from disfigurements, with well-developed branch and root systems, conforming to Federal, State and County laws, requiring inspection for plant diseases and insect infestation.
2. Inspection certificates required by law shall accompany each shipment, invoice or order for stock, and when plant material arrives at site, file certificate of inspection with Forest Service, or County Agricultural Department.
3. Tag plant materials with name and size in accordance with standards of practice recommended by American Association of Nurserymen.
4. Sizes of tree and shrub containers shall be as stated on the planting plan. Container stock shall grow in containers for at least six (6) months, but not over two (2) years. Samples shall be shown to prove that root-bound conditions do not exist. Container plants that have cracked or broken balls of earth when taken from containers shall not be planted, except upon special approval.
5. Do not prune prior to delivery, except by special approval.
6. Plants shall be subject to inspection for size, variety, condition, latent defects and injuries at place of growth and at the project site any time before or during progress of work. Remove rejected plants from the project site immediately and replace with acceptable material.
7. Protect all plants from damage by sun, wind or rain at all times before planting.
8. If proof is submitted that any plant specified is not obtainable, substitution will be permitted. A proposal will be considered for use of the nearest equivalent in size or variety with an equitable adjustment of contract price. All substitutions will be subject to CITY'S approval.

9. Plants shall be grown under climatic conditions comparable to those of the subject site, unless otherwise specifically approved by the CITY.

D. Tree ties shall be of heavy hose-like plastic ties.

E. Tree stakes shall be 2" diameter x 10'-0" wood stakes actual dimension for 5 and 15 gallon trees. Use Lodgepole Pine, or approved substituted, pointed at one end and stained over their entire length with green shingle stain. Stake only plants which are indicated to be staked on Planting Plans. See details on drawings.

F. Crushed Rock Ground Cover:

1. Provide crushed rock (gravel or "fines") where indicated, and as specified, on the drawings. Rock shall be installed per the thickness stated on the drawings; if no thickness is called out install a minimum of 2" thick.

PART 3 - EXECUTION

INSTALLATION

Commence work within five days after notification by the Owner and conduct operations continually until completion, unless weather conditions are unfavorable.

Site Clearance:

Clean and remove weeds, grasses, roots and any minor accumulated debris and rubbish from planting areas before commencing work. Existence of major amounts of debris shall be called to the attention of the General Contractor for removal. For turf removal, use two treatments of Fusilade II Herbicide – allowing two weeks for each treatment to run its course. After the herbicide treatment process is complete and the turf is dead, turf is to be removed by Contractor. Follow the product label for application and handling of herbicide. Payment for this work shall be included in the Demolition bid item #3 work.

Storage/Staging Area/Maintenance:

Storage of plants and preparation of a staging area shall be the responsibility of the contractor, and shall be coordinated with the Owner. Ensure that plants are protected from damage by sun, rain, wind and construction work. Stored plants must be watered and maintained so they remain in vigorous condition; damaged material must be replaced at no cost to the Owner.

Finish Grading of Planting Areas:

Grading shall be done as indicated on the Grading Plans and as follows:

Do not work the soil when moisture content is so great that excessive compaction will occur; nor when content is so dry that dust will form or clods will readily break up.

Remove and dispose of all soil in planting areas that contains any deleterious substance such as oil, plaster, concrete, gasoline, paint, solvents, etc., removing the soil to a minimum in the affected areas. The affected soil shall be replaced with native or imported soil, as required. The Subcontractor shall be responsible for any damage to installed plants caused by such substances.

If an area to be landscaped is not acceptable to the Contractor, he shall notify the CITY in writing.

Loosen all planting areas to a depth of 8" prior to the start of finish grading. Finish grades shall allow for addition of soil conditioners.

Make minor grade adjustments as directed by the CITY Inspector.

Warp grades so that water does not collect where designed drainage meets an obstruction.

Use water trucks and sprinklers, as required, to control all airborne dust caused by grading operations.

Finish grade all planting areas to a smooth and even condition, making certain that water does not pocket nor irregularities remain. Remove and dispose of all foreign materials, clods and rocks over 1-1/2" in diameter within three (3) inches of surface. Provide a grade, after conditioning and planting, which is 1-1/2" below the tops of curbs and walks, sloping to drain to adjacent roadway, drain swale or catch basins.

Soil Sample Testing and Soil Conditioning: (applies to all irrigated areas)

CITY Inspector will meet with landscape contractor prior to planting in order to discuss plant and tree locations. Landscape contractor must allow for field adjustments of all plant material.

Soil samples (minimum of one (1)) must be sent to Soils and Plant Laboratory, Inc., 1594 North Main Street, Orange, California 92867, (714) 282-8777; or equal approved laboratory. Samples shall be reviewed for soil analysis and amendment recommendations. An analysis shall be submitted to the CITY in writing. This analysis shall include a location map indicating where the soil samples were taken on the site. This procedure shall also apply to water samples and water analysis should this be necessary. Water analysis shall be done if requested by the landscape architect or the Owner. Soil analysis fees to be paid by contractor.

The landscape contractor shall provide a minimum of one (1) percolation pit per acre to monitor how quickly the water will drain from tree and shrub pits. Landscape contractor will dig in locations directly by the CITY. The holes shall be 48" deep by 48" wide; the holes will then be saturated with water and filled with water. The holes will then be measured as to the number of inches they drain in one (1) hour. If the drainage is less than 2" per hour, the contractor must notify the CITY in writing. The landscape architect will then provide site specific drainage details that will assist in removing excess water from tree roots.

All planting areas with a grade of 3:1 or flatter shall be graded to finish grade allowing for amendments, then incorporate the following amendments evenly into the top 4" to 6" of soil for each 1,000 square feet of area, unless test results require a change; do not add amendments until CITY has reviewed test results:

Three (3) cubic yards of nitrolized shavings

200 pounds Gro-power Plus

All rocks or unbroken soil clods over 1-1/2" diameter brought to the surface shall be removed from the site.

Soil deemed to have significant clay content (greater than 15% by weight) shall be amended accordingly prior to planting. (Specifics to be stated on a per project basis). IT IS THE LANDSCAPE CONTRACTORS' RESPONSIBILITY TO DETERMINE CLAY CONTENT OF SOIL AND REPORT TO THE CITY.

Planting Shall be Done as Follows:

Determine location of trees and shrubs by scaling from Planting Plans. All trees planted within 5' of paving, walls or buildings shall have root guards installed, per item F of Section 02950.2.01 of these specifications.

Locate containers per plan and obtain approval from the CITY before excavating pits.

Excavate pits per detail sheets.

If planting pits are cut with power auger, vertical sides of pit shall be additionally broken with balling bar or spade to interrupt continuous curve influence on root development.

Plant material shall be planted in such a manner, that after settling, the crown of the plant bears the same relation to finish grade that it did to the surface in the container.

Backfill tree and shrub pits with clean native soil.

Form shallow basin around edge of plant pit.

Grade area around plants to finish grades and dispose of excess soil.

Stake or guy all new trees so indicated on plant material legend in accordance with details shown on the drawings.

Crushed Rock:

Spray soil with pre-emergent.

Wet and compact area which is to receive rock to 90% compaction.

Spread, wet and roll crushed rock to specified thickness. If no thickness is specified provide 2" minimum thickness. Thickness of rock shall be uniform.

Pruning:

Prune minimum necessary to remove injured twigs and branches, deadwood and suckers.

Prune plants according to standard horticulture practice, by a qualified arborist. Cover all cuts over 1/2" in diameter with an application of "tree seal" or equal, colored to match trunk. Do not use lead base paints.

Clean-Up:

During the course of the work, remove surplus materials from the site and leave premises in a neat and clean condition.

Clean up and remove all remaining debris and surplus materials upon completion of work, leaving the premises neat and clean.

Remove all tags, labels, nursery stakes and ties from plants.

END OF SECTION

SECTION 0329010
MAINTENANCE

PART 1 – GENERAL

1.01 INSURANCE, LICENSES, PERMITS

The Landscape Maintenance Contractor shall possess all insurance, licenses and permits required to perform the landscape maintenance.

A. Licensing Requirements

In accordance with Division II, Chapter 9 of the Business and Professions Code of the State of California, providing for the licensing of contractors, the Contractor shall possess a valid C-27 landscape maintenance license or Class A Contractor's license. In addition, the Contractor shall possess a valid chemical applicator's license to include pest control or must subcontract to a licensed contractor.

B. Contract Termination

The Owner reserves the right to terminate the contract, without penalty, for cause immediately or without cause after thirty (30) days written notice thereof is delivered to Contractor, either personally or by mail addressed as shown on the contract documents. In the event of such termination, the bond shall remain in effect for six (6) months after the date of termination to provide surety that any remedial work required at the time of termination will be completed.

1.02 SCOPE OF WORK

These specifications establish the standard for the maintenance of the landscaping for the ninety (90) days following completion of landscape installation.

The Contractor shall furnish all labor, equipment, materials, tools, services and special skills required to perform the landscape maintenance as set forth in these specifications and in keeping with the highest standard of quality and performance.

Maintenance of these areas shall include maintenance of plant materials and irrigation system. Maintenance of plant materials shall include, but is not limited to, trimming and edging, pruning, weed control, cultivation, pest control, tree surgery, plant replacement and clean-up of drainage system. It is the intent of these specifications to provide plant material maintenance methods to keep the site in a state of growth and repair. Irrigation maintenance shall include operation of system adjustment and all necessary repairs.

A. Emergency Numbers

The Contractor shall provide, at all times throughout the duration of this contract, emergency telephone numbers which can be called for emergency conditions at any time that the Contractor's representatives are not immediately available at the job site. An alternative number shall be provided in case no answer is received at the first number. The emergency number shall be used to contact a responsible representative of the Contractor who can take the necessary action required to alleviate an emergency condition which threatens to cause damage to any property.

B. Method of Payment

The Contractor shall present monthly invoices of one-third of the total amount of the 90-day period. Payments will be made monthly and shall equal one-third of the total amount for a 90-day period, due within thirty (30) days from which service was performed.

PART 2 - EXECUTION

2.01 MAINTENANCE DURING CONSTRUCTION

A. Continuously maintain all areas included in the contract during the progress of the work, the maintenance period and until final acceptance of the work.

B. After all work indicated on the drawings or herein specified has been completed, observed and accepted by the City of Rancho Mirage Representative, maintain all planted areas for a period of 90 days.

C. Tree and Shrub Care:

1. Watering:

Maintain a large enough water basin around plants so that water can be applied to establish moisture through the major root zone. When hand watering, use a water wand to break the water force.

2. Pruning:

a. Prune trees to select and develop permanent scaffold branches that are smaller in diameter than the trunk or branch to which have vertical spacing of 18" to 48" and radial orientation so as not to overlay one another. Eliminate narrow v-shaped branch forks that lack strength; to reduce toppling and wind damage by thinning out crowns; to maintain growth within space limitations; to maintain a natural appearance; to balance crown with roots.

b. Under no circumstances will stripping of lower branches ("raising up") of young trees be permitted. Retain lower branches in a "tipped back" or pinched condition with as much foliage as possible to promote trunk growth (tapered trunk). Lower branches may be cut flush with the trunk only after the tree is able to stand erect without staking or other support.

c. Thin out and shape evergreen trees when necessary to prevent wind and storm damage. Perform primary pruning to deciduous trees during the dormant season. Prune damaged trees or those that constitute health or safety hazards at any time of the year, as required.

d. The objectives of shrub pruning is the same as for trees. Do not clip shrubs into balled or boxed forms unless such is required by the design and designated on the plant legend.

e. Make all pruning cuts of lateral branches or buds, flush with trunk. "Stubbing" will not be permitted.

D. Staking and Guying:

Remove stakes and guys as soon as they are no longer needed. Inspect stakes and guys to prevent girdling of trunks or branches, and to prevent rubbing that causes bark wounds.

E. Weed Control:

1. Keep basins and areas between plants free of grasses and weeds. Apply pre-emergent herbicides recommended by a licensed pest control advisor. Avoid frequent soil cultivation that destroys shallow roots.

2. Maintain insect and disease control with approved materials.

F. Replacement of Plants:

Remove dead and dying plants and replace with plants of an equal size, condition and variety of original planting plan, to be paid for by the Landscape Contractor.

G. Groundcover Care:

1. Apply a pre-emergent, Surflan and Ronstar. Treat larger areas with Surflan at rate of 5-1/3 lbs per acre; apply Ronstar to smaller areas at rate of 200 lbs per acre.
2. Remove trash weekly.
3. Edge groundcover to keep in bounds and trim top growth as necessary to achieve an overall even appearance.
4. Replace dead and missing plants at Contractor's expense.
5. Exterminate gophers and moles, repair damage.

PART 3 - CLEAN UP

Contractors shall remove all debris associated with his work from the project site on a daily basis. Contractor is responsible for providing proper debris receptacles, or disposing of debris off site.

All receptacles or off site disposal must conform to state and local codes. Contractor is responsible for identifying any waste associated with his work which may be deemed as being "hazardous" as defined by the EPA, and disposing of it per EPA regulations.

3.01 MAINTENANCE DURING 90-DAY MAINTENANCE PERIOD

1. Groundcover Areas

Shrub and groundcover areas shall be tilled only prior to pre-emergent application but raked and edged weekly or bi-monthly and all debris removed from the areas that day. Groundcover shall be kept neat in appearance and within the intended area of planting by edging and trimming. Keep shrubs and groundcover neatly trimmed away from irrigation heads to allow for their proper operation. Groundcovers shall be trimmed back from shrubs and trees as necessary. Trim and edge to maintain paver edging and curbs free of plant growth.

2. Disease, Harmful Insect and Rodent Control

Maintain areas free of pests and diseases including rodents, snails, insects, etc. See Section 02960.2.03 A. 4, 5 and 6 and D, E and F of Additional Work in All Areas.

3. Weed Control

Weeds shall be controlled so as not to reach an objectionable height. Remove weeds by chemical or mechanical means on a monthly schedule. Weed infestations of the shrub and groundcover areas, if severe, may be controlled by a commercial herbicide by obtaining written permission from the CITY. Such permission shall depend on the Contractor submitting to the CITY the following information:

a. The exact location(s) where the herbicide is to be used.
b. Verification that the herbicide has no harmful effect on desirable plant materials.
c. The herbicide will be applied at the manufacturer's instructions for application.

Bermuda grass infestations of the shrubs, groundcover and slope areas, if severe, should be sprayed out and "weedeaten".

4. Watering

A regular deep watering program shall be implemented to give the best results. The established groundcover shall not be kept wet but should dry out somewhat between waterings. See Section 02960.2.03.H, Additional Work in All Areas.

Additional Work in All Areas

1. Tree Maintenance

a. Trees shall be pruned to select and develop permanent scaffold branches that are smaller in diameter than the trunk or branch to which they are attached, which have vertical spacing from 18" to 48" and radial orientation so as not to overlay one another, to eliminate diseased or damaged growth, to eliminate narrow V-shaped branch forks that lack strength, to reduce toppling and wind damage by thinning out crowns, to maintain a natural appearance, to balance with roots.

Tree maintenance should be done on a yearly or twice yearly basis, as needed, to maintain the trees in a healthy and vigorous growing condition. A qualified tree care professional should be contracted by the Owner to perform this service on all trees 15' or greater in height. Trees under 15' in height may be maintained by the general maintenance contractor following the methods outlined below. Trees are not to be pruned to maintain an artificial height of 15' or under when the natural growth characteristics would exceed a 15' height.

Under no circumstances will stripping of lower branches (raising up) of young trees be permitted. Lower branches shall be retained in a "tipped back" or pinched condition with as much foliage as possible to promote caliper trunk growth (tapered trunk). Lower branches can be cut flush with the trunk only after the tree is able to stand erect without staking or other support.

Evergreen trees shall be thinned out and shaped when necessary to prevent wind and storm damage. The primary pruning of deciduous trees shall be done during the dormant season. Damaged trees or those that constitute a safety hazard shall be pruned at any time of the year, as required.

All major pruning operations will not begin until reviewed with the CITY.

b. Pruning shall be done by those experienced and skilled in pruning techniques. All cuts shall be done using proper horticultural practices. Cuts made over 1-1/2" in diameter shall be treated with a sealer.

c. Prune trees to allow for necessary clearances for pedestrian and vehicle circulation.

d. Ailing or stunted trees which fail to meet expected growth will receive additional treatments to correct any deficiencies.

e. Surface roots which become maintenance or appearance problems will be removed as required to prevent damage to adjacent areas, sidewalks and curbs.

f. Apply all required insecticides and fungicides to prevent or control plant diseases and pests.

g. Perform minor tree surgery, as required.

h. Tree stakes, ties and guys shall be checked at least monthly and corrected, as needed. Ties will be adjusted to prevent girdling. Remove stakes, ties and guys as soon as they are no longer needed. Replace broken stakes, as required.

i. To prevent the setting and eventual dropping of fruit, olive trees shall be sterilized every spring, just before flowers are at full bloom, then again 7 to 14 days later to get any late blooms. The product for this shall be "Olive Stop" or approved equal.

j. The Contractor shall be responsible for the spraying of all pine trees for spider mites four (4) times a year. The product for this shall be Malathion followed up with petroleum oil for overwintering adults and eggs.

2. Shrub Maintenance

a. The objective of shrub pruning is the same as for trees.

b. Shrubs shall be pruned, as required, for safety, removal of broken or diseased branches and general containment or appearance.

c. Prune shrubs to retain as much of the natural informal appearance as possible, consistent with intended use. Shrubs shall not be clipped into balled or boxed forms unless such is required by the design.

d. All pruning cuts shall be made to lateral branches, buds or flush with the trunk. "Stubbing" will not be permitted.

e. Apply all insecticides or fungicides to control pests.

3. Loss or Damage to Plant Material by Contractor

Shrubs, trees and plants damaged or killed due to the Contractor's operations, negligence, or chemicals shall be replaced at no cost to the Owner.

4. Disease and Harmful Insect Control

Monthly inspections shall be made for evidence of disease and/or harmful insects. If evidence of such is found, a report shall immediately be submitted to the CITY. The report shall include:

a. Exact location(s) where disease and/or harmful insects are prevalent.

b. Contractor's opinion of the type of disease and/or insect.

c. Contractor's recommendations for control and elimination of disease and/or harmful insects.

5. Pest Prevention and Control

a. The Contractor shall be responsible for detection, prevention, elimination and control of diseases, harmful insects and weeds in the turf, shrubs, trees and groundcover areas. The Contractor shall select and supply proper materials and licensed personnel and obtain necessary permits to comply with all city, county, state and federal regulations or laws.

b. Contractor will assume responsibility and liability for the use of all chemical controls. Pests and diseases to include, but not limited to, all insects, mites and other harmful organisms.

c. Chemical controls to include necessary use of herbicides and plant growth regulators. Pests may be controlled by mechanical means, as well as chemicals.

6. Rodent Control

The Contractor shall be required to hire, as subcontractor, a professional who is in business strictly for the purpose of controlling rodents. The Contractor shall be responsible for overseeing the subcontractor to assure the control of all rodents, as required in all landscaped areas.

7. Clean Up

a. The Contractor shall be responsible for keeping the entire area, including hardscape areas, free of debris such as papers, bottles, cans, glass, dirt, etc. Debris shall be removed Monday, Wednesday and Friday each week. Contractor shall be responsible for trash removal from the sites.

b. Contractor shall remove all debris resulting from the maintenance operations and dispose of it off-site. All grass clippings deposited on roadways or walks shall be picked up after each mowing or trimming operation.

c. All debris resulting from any of the Contractor's operations shall be removed and disposed of legally at the Contractor's expense. No debris will be allowed to remain at the end of the work day.

d. All walkways will be kept clean and care shall be taken not to create unnecessary hazards to the walking surface.

e. Unless otherwise indicated or directed, the Contractor shall provide a general clean-up operation at least once a week for the purpose of picking up debris which may accumulate from use of the area, windblown debris, dropped twigs or branches, leaves or paper in the landscape area.

8. Irrigation System

a. Operation

i. The water schedule will be established and programmed by the Contractor's landscape maintenance supervisor. Application rates will be based on the amount the planting areas are capable of receiving without excessive runoff. The irrigation system's schedule shall be monitored and adjusted accordingly to maintain efficient use of water being applied.

ii. In determining rates of application, soil type, topography and weather conditions will be taken into consideration. The project is equipped with an automatic system which provides for repeat cycles. Applying water over short periods of time will allow for proper infiltration and thereby minimize runoff.

iii. Contractor shall turn off all controllers when it is unnecessary to irrigate due to adequate rainfall.

iv. Sprinkler heads shall be kept clear of overgrowth which may obstruct maximum operation.

v. Contractor will avoid manual activation of automatic valves. Contractor will keep system in operation by valve or head adjustment to keep all systems operating at manufacturer's recommended operating pressures. This shall be accomplished by valve throttling and pressure gauge.

vi. Contractor will be responsible for hand watering any areas not provided with an irrigation system, or any area resulting from the physical breakdown of the irrigation system.

b. Maintenance

i. The Contractor shall be responsible for the cost of cleaning, repair, adjustment and replacement of sprinkler system components, with the exception of irrigation controllers and backflow protection devices.

ii. The Contractor shall be responsible for the cost of cleaning, repair, adjustment and replacement of all items listed in the foregoing paragraphs in addition to the following:

Plastic Pipe

Plastic Pipe Fittings

Remote Control Valve Wiring

Remote Control Valves

Manual Control Valves

Quick Coupler Valves

Irrigation Heads

Valve Boxes

iii. Replacement of any item shall be with an item of identical design, unless otherwise specified in writing by the CITY.

a. The following specifications are provided for replacement of plastic pipe, and plastic pipe fittings:

1. Plastic pipe shall be polyvinyl chloride (PVC) Schedule 40, Type 1, Grade 2 (PVC 1220).

2. Plastic pipe fittings and connections shall be PVC Schedule 40.

b. The Contractor shall inspect and examine the irrigation system while water is on twice per month.

c. Any part of the system not functioning normally shall immediately be cleaned, adjusted, repaired or replaced.

d. Contractor shall be responsible for adjusting height of irrigation risers necessary to compensate for plant material growth.

e. Automatic controllers will be kept locked at all times.

3.02 MISCELLANEOUS

A. The Contractor shall furnish and pay all costs for the following material:

Herbicides, pesticides and fungicides

Irrigation system parts

Tree stakes and ties

All tools and equipment to complete the work specified

Plant materials damaged by the Contractor

B. Daily Inspection

The Contractor shall be responsible for notifying Owner upon discovery of damage.

C. Inspections will be made by Owner and the Contractor on a weekly basis and/or at the request of the Contractor. Once a month Owner, Landscape Architect and Contractor will meet. The purpose of the meeting will be to discuss specific project problems.

END OF SECTION

SECTION 0329020
CONTRACT CLOSEOUT

PART 1 - GENERAL

SPECIFIED WORK

This section is complementary to the General Conditions and Supplementary General Conditions. Nothing herein shall be considered to waive any requirements of the General Conditions or Special Provisions.

Receipt and approval of all items specified in this Section is a prerequisite for final payment.

PART 2 - GUARANTEES

WRITTEN GUARANTEE

Provide guarantee in writing in accordance with the General and Supplementary Conditions.

PART 3 - INSPECTIONS

3.1 PRELIMINARY FINAL INSPECTIONS

Semi-final inspection: When the Contractor is of the opinion that the Project is substantially complete (naming a date) it shall request a semi-final inspection by the CITY'S ENGINEER to determine the status of completion. Such notice shall be given at least three (3) days before the requested inspection date.

Certificate of Substantial Completion: If the CITY'S ENGINEER finds the project substantially complete, he will prepare a list or "punch list" of items to be completed or corrected.

If the CITY'S ENGINEER does not concur in the Contractor's claim of Substantial Completion, he will so notify the contractor, and thereafter the Contractor shall initiate a new request for (semi-final) inspection.

3.2 PUNCH LIST

As the Contractor completes the list of uncompleted or uncorrected items, he shall submit Guarantees and Certificates and Record Drawings to the CITY'S ENGINEER for his review.

When all items on the list are completed or corrected, the Contractor shall send to the CITY'S ENGINEER a statement that the project is complete and request a final inspection.

3.3 FINAL INSPECTION

If the project is complete and all "punch list" items are completed or corrected, the CITY'S ENGINEER will issue a final "Certificate of Payment".

3.4 MORE THAN ONE FINAL INSPECTION

If because of acts or omissions of the Contractor, the CITY'S ENGINEER is required to conduct more than one final inspection of the Project, he will charge the Owner for the additional services required and such costs will be deducted from the money still due the Contractor.

PART 4 - PAYMENT

4.1 PAYMENT

Payment for contract closeout shall be included in various other items of work, and no additional compensation shall be made therefor. This payment shall include compensation for all labor, equipment, materials, and expenses related to installation, maintenance, and removal of facilities required to complete the project.

END OF SECTION

Attachments

KIM LIGHTING

Micro-Flood® EL217

120 / 277 Volt Die-Cast Aluminum LED

revision 4/11/11 • el217.pdf

Type:
Job:
Fixture Catalog number:

/
Fixture Mode Finish

Fixture Options:

Ordered Separately from Fixture
See page 2

Mounting Options:

Ordered Separately from Fixture
See pages 3-5

Approvals:

Date:
Page: 1 of 5

Specifications

Housing and Lens Frame: Die-cast low copper alloy (<0.6% Cu) aluminum.

Swivel: Die-cast aluminum with locking teeth and ½″ solid brass NPT mount. Provides horizontal rotation independent of the threaded mount. Swivel locked by ¼-20 stainless set screw. Clear anodized prior to titanated zirconium conversion coating for added corrosion resistance.

Lens: Clear flat tempered glass with silicone gasket.

Fasteners: Stainless steel.

Wiring: No. 18 SF rated 200°C.

Finish: Super TGIC thermoset polyester powder coat paint, 2.5 mil nominal thickness, applied over a titanated zirconium conversion coating; 2500 hour salt spray test endurance rating. Standard colors are Black **(BL)**, Dark Bronze **(DB)**, and Verde Green **(GR)**.

Optical System: A total of 3 or 9 LED emitters configured in a rectangular array comprised together as a module. Available in 3500K and 5100K.

Driver: Universal Voltage from 120 to 277V with a ±10% tolerance. -40ºF. starting temperature. All drivers are Underwriters Laboratories recognized.

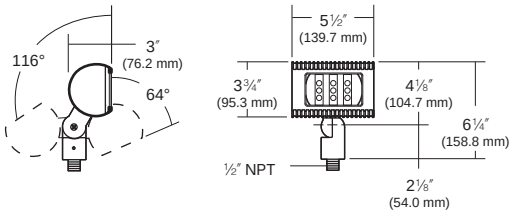

ORDERING INFORMATION

Trees

Fixture	Source
☐ **EL217FL / 3L3KUV[1]**	3.6W, 3 LED's, 3500K
☐ **EL217FL / 3L5KUV[1]**	3.6W, 3 LED's, 5100K

Palms

Fixture	Source
☐ **EL217FL / 9L3KUV[1]**	10.8W, 9 LED's, 3500K
☐ **EL217FL / 9L5KUV[1]**	10.8W, 9 LED's, 5100K

[1] Universal Voltage from 120 to 277V with a ±10% tolerance. For 3.6W, Max Amps. are .030 for 120V, .020 for 208V, .015 for 240V, .013 for 277V. For 10.8W, Max Amps. are .090 for 120V, .050 for 208V, .045 for 240V, .040 for 277V.

Finish

Finish

☐ **BL - Black**
☐ **DB - Dark Bronze**
☐ **GR - Verde Green**

Listings and Ratings		
UL cUL 1598[1]	IP66 Rated	25C Ambient

[1]Suitable for wet locations

KIM LIGHTING RESERVES THE RIGHT TO CHANGE SPECIFICATIONS WITHOUT NOTICE.

HUBBELL LIGHTING, INC.

U.S.PATENT D298,656

c UL us LISTED

Fixture Options

Ordered Separately from Fixture

Barn Doors

Cat. No.	Finish
☐ **BD215BL**	Black
☐ **BD215DB**	Dark Bronze
☐ **BD215GR**	Verde Green
☐ **No Option**	

Extruded aluminum, fully adjustable. Provides beam and glare control.

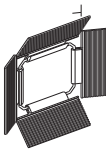

Fixed Hood

Cat. No.	Finish
☐ **FH215BL**	Black
☐ **FH215DB**	Dark Bronze
☐ **FH215GR**	Verde Green
☐ **No Option**	

Formed .062″ thick aluminum. Provides glare control.

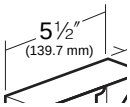

Mounting Options

Ordered Separately from Fixture

Landscape Light Post by Engineered Products Co.

Cat. No.
☐ **EP17**
☐ **No Option**

PVC fixture molded in black with ½″ NPT mount is corrosion free and UV resistant. Replaces EMT, conduit connectors and weatherproof boxes. 100% shatter resistant against denting and cracking. Angled bottom to eliminate cable congestion.

17½″ post length

NOTE: EP17 should be used with a UL listed fixture and grounding means (i.e., third wire) suitable for use in wet locations.

"x" = required depth of conduit per local codes.

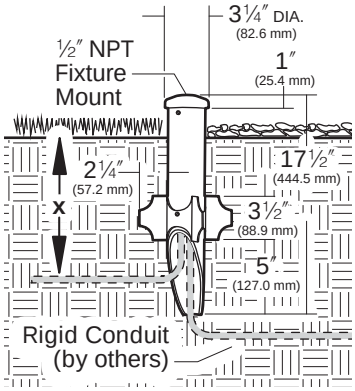

Architectural Junction Box

Cat. No.	Finish
☐ **JB1/BL**	Black
☐ **JB1/DB**	Dark Bronze
☐ **JB1/GR**	Verde Green
☐ **No Option**	

Die-cast aluminum with ½″ NPSM fixture mount. Internal set screw provided for locking position. Two ½″ NPSM in bottom, 17 cu in. internal volume. Super TGIC powder coat paint over clear anodizing and titanated zirconium conversion coating.

NOTE: May also be used to hard mount low voltage fixtures.

Application Notes

- Elevates Accent Lights above ground cover to prevent foliage from blocking the light.
- Elevates Path Lights above ground cover to achieve a greater light throw.

CAUTION: Junction box must be installed high enough to avoid contact with soil or standing water.

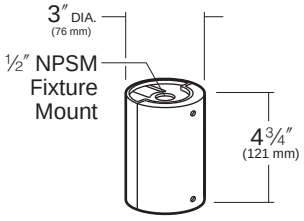

Portable Spear Mount

Cat. No.
☐ **J-25N**
☐ **No Option**

Cast iron with ½″ NPSM fixture mount. Hot dip galvanized finish. 5.5 cu in. splice compartment. (SJTW-A) 3 wire cord and plug.

9′ cord length

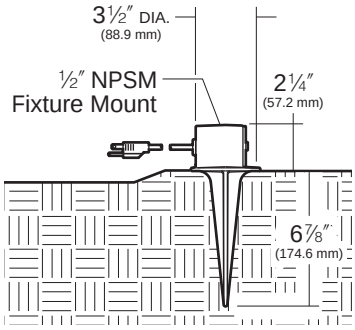

Mounting Options

Ordered Separately from Fixture

Brass In-grade Architectural Junction Box

Cat. No.
- ☐ **JBR-2**
- ☐ **JBR-3**
- ☐ **JBR-21**
- ☐ **JBR-24**
- ☐ **No Option**

Die-cast brass with ½″ NPSM fixture mount and die-cast cover. Internal set screw provided for locking position. 18 cu in. internal volume.

JBR-2 (2) ½″ NPT in bottom
JBR-3 (2) ¾″ NPT in bottom
JBR-21 (2) ½″ NPT in sides, (2) ½″ NPT in bottom
JBR-24 (4) ½″ NPT in sides, (2) ½″ NPT in bottom

All side taps provided with plugs.

NOTE: May also be used to hard mount low voltage fixtures.

25 Year Limited Warranty:

Solid brass junction boxes are warranted for 25 years, from date of sale, against manufacturing defects and failure due to corrosion.

Application Notes

- Creates a flush-mounted appearance.
- May be cast in concrete for increased stability.

CAUTION: Fixture stem and swivel must not contact soil or standing water. Provide drainage away from junction box.

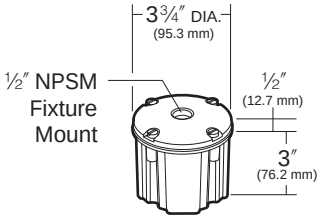

Brass In-grade Staked Junction Box

Cat. No.
- ☐ **JBR30**
- ☐ **No Option**

JBR30
BRASS IN-GRADE STAKED JUNCTION BOX

Die-cast brass with ½″ NPSM fixture mount and die-cast cover. Internal set screw provided for locking position. 18 cu in. internal volume.

(2) ½″ NPT in bottom with (2) 19″ long brass stakes

NOTE: May also be used to hard mount low voltage fixtures.

Brass In-grade Staked Junction Box with Cord

Cat. No.
- ☐ **JBR32**
- ☐ **No Option**

JBR32
BRASS IN-GRADE STAKED JUNCTION BOX WITH CORD

Die-cast brass with ½″ NPSM fixture mount and die-cast cover. Internal set screw provided for locking position. 18 cu in. internal volume. (SJTW-A) 3 wire cord and plug.

(2) 19″ long brass stakes with 9′ cord

25 Year Limited Warranty:

Solid brass junction boxes are warranted for 25 years, from date of sale, against manufacturing defects and failure due to corrosion.

Application Notes

- Creates a flush-mounted appearance.
- May be cast in concrete for increased stability.

CAUTION: Fixture stem and swivel must not contact soil or standing water. Provide drainage away from junction box.

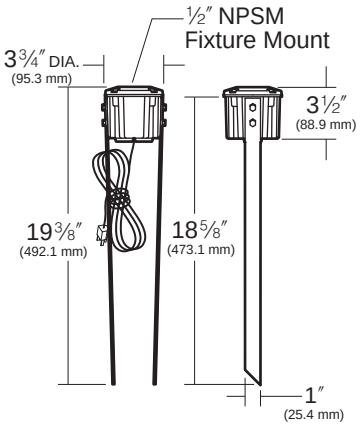

Mounting Options

Ordered Separately from Fixture

Stanchion Mount

Cat. No.	Finish
☐ **SM18/BL**	Black
☐ **SM18/DB**	Dark Bronze
☐ **SM18/GR**	Verde Green
☐ **No Option**	

3″ O.D. by .188″ wall cast aluminum with ½″ NPSM fixture mount and hand hole with flush cover. Internal set screw fixture lock accessible through hand hole. Internal ground lug supplied with installed lead. Super TGIC powder coat paint over clear anodizing and titanated zirconium conversion coating.

NOTE: May also be used to hard mount low voltage fixtures.

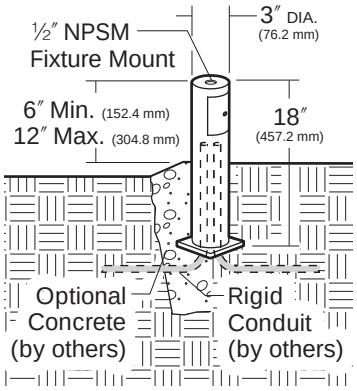

Surface Mount

Cat. No.	Finish
☐ **J-27N/BL**	Black
☐ **J-27N/DB**	Dark Bronze
☐ **J-27N/GR**	Verde Green
☐ **No Option**	

Cast aluminum with ½″ NPSM fixture mount. Internal set screw provided for locking position. 5 cu in. internal volume. Super TGIC powder coat paint over clear anodizing and titanated zirconium conversion coating.

NOTE: May also be used to hard mount low voltage fixtures.

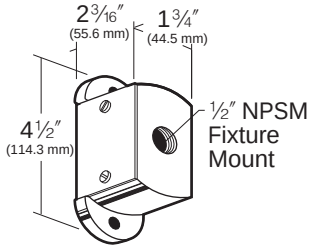

Architectural Wall Mount

Cat. No.	Finish
☐ **JW/BL**	Black
☐ **JW/DB**	Dark Bronze
☐ **JW/VG**	Verde Green
☐ **No Option**	

Die-cast aluminum with ½″ NPSM fixture mount. Internal set screw provided for locking position. Canopy attaches to stainless steel wall plate for mounting to any standard electrical outlet box. Super TGIC powder coat paint over titanated zirconium conversion coating.

NOTE: May also be used to hard mount low voltage fixtures.

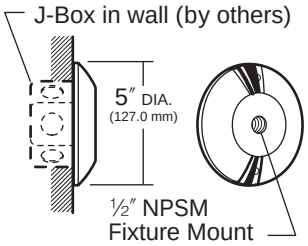

SUREBOND

SB-1300 JOINT STABILIZING SEALER
TECHNICAL DATA SHEET

USES
Interlocking concrete, clay and natural stone paving.

OTHER USES
Concrete, masonry, natural and manufactured stone, porous or unglazed tile and terrazzo.

Not recommended for granite, marble, asphalt, glazed or ceramic tile.

RELATED PRODUCTS
SB-600 Wet Look Sealer
SB-5000 Stainblocking Invisible Sealer
SB-4000 Water Repelling Invisible Sealer
SB-10 Paver Bond®
SB-442 General Stain Remover
SB-488 Efflorescence & Rust Remover

Features	Benefits
What makes SB-1300 Joint Stabilizing Sealer different?	
Immediate, easy application	• Fast drying, tack-free product can be used as soon as pavers are installed
Breathable	• Will not trap moisture or efflorescence and whiten
Dual purpose	• Sealer and joint sand stabilizer
Modified epoxy	• Protects against salt, acid and other corrosives
Water-based	• Solvent free
Environmentally friendly	• Exceeds all VOC and EPA standards
What are the benefits of joint sand stabilization?	
Reduces weeds	• Maintains joint sand height, reducing weed growth
Reinforces pavement	• Maintains horizontal friction by bonding the sand between units
What makes SB-1300 Joint Stabilizing Sealer convenient as a joint sand stabilizer?	
Chemical cure	• Does not soften when wet
Easy maintenance	• Can be cleaned and power washed
What are the benefits of sealing?	
Stain resistant	• Improves maintenance efforts and cleaning becomes easier
Water seals	• Reduces water penetration
What makes SB-1300 Joint Stabilizing Sealer different as a sealer?	
Preserves color	• Does not yellow while protecting from UV light
Penetrant coating	• Will not delaminate or show wear and tracking
Versatile	• Use on multiple surfaces
Clear coat	• Topical resealing can be carried out

PRODUCT DESCRIPTION

SB-1300 Joint Stabilizing Sealer is a water-based, single component, epoxy-modified, enhancing sealer and joint sand stabilizer. The product can be used both inside and outside, on old and new pavements, sealing paving stones and stabilizing joint sand at the same time. It is the only sealer that can be applied immediately after paver installation, as it is breathable and will not trap the naturally occurring efflorescence. This breathability also decreases freeze-thaw damage and improves surface durability and ease of maintenance. SB-1300 Joint Stabilizing Sealer is solvent free and exceeds all VOC and EPA standards. The product is non-hazardous and has the consistency of water. It is milky white when applied and dries crystal clear, creating a finish that ranges from a matte finish to a satin sheen, depending on the surface. Cured sealer is freeze resistant to -60°F (-51°C) and is stable up to a temperature of 180°F (82°C).

PREPARATION
The pavement surface should be clean and free from oil, dust and any loose material. If necessary, use SB-442 General Stain Remover to clean pavers (refer to label and data sheet for guidelines). The paver joints should be completely filled with dry, correctly graded jointing sand with the top level not exceeding the bottom of the chamfer or 1/8" below the surface on non-beveled or tumbled paver surface. A leaf blower is the recommended method to remove dust and fine sand particles from the surface and achieve the optimum joint sand height. Remove all visible efflorescence prior to sealer application; use SB-488 Efflorescence and Rust Remover if necessary (refer to label and data sheet for guidelines). Be sure surface is dry prior to application.

APPLICATION INFORMATION
SB-1300 Joint Stabilizing Sealer should be flood coated to the pavement surface using a siphon pump, bulk sprayer or a handheld garden sprayer. Use coverage guidelines to determine the correct amount of material for the project. Flood joints to ensure proper sand penetration and stabilization and use a soft foam squeegee to direct excess material into the joints and to remove all excess material from the surface. Material coverage will depend on surface porosity, joint size and pavement usage. Care should be taken that no excess material is pooled on the surface. Clean all application equipment with water and do not allow material to dry in containers as removal becomes more difficult.

NOTE: When using SB-600 Wet Look Sealer in conjunction with SB-1300 Joint Stabilizing Sealer, SB-600 should be rolled or sprayed on the surface first. When spraying SB-600 Wet Look Sealer, ensure the joint sand is not completely saturated with the product, as this will inhibit the penetration of the SB-1300 Joint Stabilizing Sealer. Allow SB-600 Wet Look Sealer to cure completely.

DRYING TIME

The paver surface should be dry to the touch within approximately 30 minutes of application. Ensure that pavement is protected from moisture and traffic for at least 24 hours after application and, although initial joint stabilization occurs quickly, complete curing will take additional time. Drying time will vary depending on temperature and humidity.

MAINTENANCE

Pavements should be correctly maintained to get the best performance from both the pavement and SB-1300 Joint Stabilizing Sealer. Surebond sealers are compatible with Surebond cleaners and can be used to remove organic and inorganic stains like oils, food and beverages and mineral deposits from the pavement surface. Test cleaners in inconspicuous areas prior to cleaning and always thoroughly rinse off surface after cleaning. Hot water pressure washers should be used in conjunction with Surebond cleaners for best results; heat will significantly improve results when extracting the residue from oil based stains (call for correct cleaning practices). SB-442 General Stain Remover should be appropriately diluted and applied only to affected areas. Mineral deposits should be removed using SB-488 Efflorescence and Rust Remover and a cold water pressure washer, in conjunction with agitation from a natural fiber brush. Care should be taken to ensure that excessive pressure is not utilized, as it may erode joint sand and could damage many surfaces including concrete itself. SB-1300 Joint Stabilizing Sealer will not show wear patterns and topical resealing can be carried out frequently without evidencing differences in high-traffic areas. Re-applications should be carried out every 3-5 years depending on the type of pavement, usage and wear.

COVERAGE*

MATERIAL	SQ FEET	SQ METER
Interlocking Concrete Pavingstones	80 - 120	7.4 - 11.1
Concrete	150 - 200	14.0 - 18.6
Masonry	100 - 300	9.3 - 27.9
Natural/Manufactured Stone	100 - 300	9.3 - 27.9
Porous/Unglazed tile, Terrazzo	100 - 300	9.3 - 27.9

*Per gallon. Coverage based on single coat. Some applications may require additional coats. Actual coverage may vary depending on the type, age, condition, joint size and porosity of the surface, application method and other local conditions like excessive heat. Visit www.surebond.com for the latest technical information.

PACKAGING/SIZES

6 x 1 gallon containers per case / 5 gallon pails / 55 gallon drums / bulk packaging available.

STORAGE

Do not freeze container.

SHELF LIFE

Two years.

APPLICABLE STANDARDS

- ASTM E 514-90 “Water Permeability Test”
- ASTM D 1653-93 “Water Transmission of Organic Coating Films”
- ASTM C 1028-89 “Skid Resistance”
- New York DOT Test 704-07 “Salt Corrosion Test”

PRECAUTIONARY INFORMATION

Excessive applications can cause surfaces to become slippery. When this material is used on interlocking pavers their natural slip resistant texture significantly aids in providing a non-slip surface. Use adequate ventilation and wear protective clothing. Harmful if swallowed, inhaled or absorbed through the skin. Wash hands thoroughly after handling and keep containers closed when not in use. Avoid breathing vapor mist and avoid direct contact with skin (see Material Safety Data Sheet).

LIMITATIONS

Do not expose containers to freezing temperatures and store inside during cold weather. Test sealing is always recommended to ensure both the proper physical and aesthetic properties prior to starting a project. Never try to seal wet or damp surfaces. A minimum temperature of 45°F (7°C) must be maintained for a period of 24 hours prior to application. Working time is reduced when temperatures are above 90°F (32°C), so it is recommended that sealing take place during cooler temperatures. Work shall cease in inclement weather (rain or strong wind).

WARRANTY

Manufacturer warrants its products conform to the published specifications. No other warranties are expressed or implied, including those of merchantability or fitness for any purpose not expressly set forth herein. The user must determine suitability of the products for their particular use. Manufacturer and any seller’s liability for incidental or consequential damage hereunder shall not exceed the purchase price of the product used.

ASSISTANCE & ADDITIONAL INFORMATION

For sales, specification assistance, technical questions, detailing, etc., please contact:

SUREBOND
2801 International Lane
Madison, WI 53704 USA
Toll Free (US & Canada): 888-44SURE1 (888-447-8731)
Phone: (608) 237-7554 Fax: (608) 237-7558
Email: info@surebond.com

Manufactured by Surebond, Inc. Copyright 2008. All trademarks are the property of Surebond, Inc.